Lutsk National Technical University
Riga Technical University
Dunarea de Jos of Galati
Kharkiv National Automobile and Highway University
Cahul State University B.P. Hasdeu

INTEGRATED COURSE



AUTOMOTIVE TRANSPORT

Co-funded by the European Union

DIGITRANS



Co-funded by the
European Union



Lutsk National Technical University
Riga Technical University
Dunarea de Jos of Galati
Kharkiv National Automobile and Highway University
Cahul State University B.P. Hasdeu

INTEGRATED COURSE «AUTOMOTIVE TRANSPORT»

Study guide for university students

Lutsk
Vezha-Print
2025

UDC 629:656.13(075.8)
I-69

Recommended by the Academic Council of Lutsk National Technical University, protocol № 10, 29.08.2025

Reviewer:

Ion V. Ion, Prof.dr.ing.habil. Dunarea de Jos of Galati, Romania, Department of Thermal Systems and Autimotive;

Volodymur Sakhno, Doctor of Technical Science, Professor, Head of Automobiles Department, National Transport University, Kyiv, Ukraine.

Team of authors :
Michael FRATITA, Chivu ROBERT-MADALIN, Viktor SAMOSTIAN, Serhiy FEDOSOV, Marina BUNEA, Oleg SITOVSKYI, Vasyl PAVLIUK, Stanislav PRYSTUPA, Valentyn ZABLOTSKYI, Andrii HNATOV, Arhun SHCHASIANA, Olha ULIANETS, Pavli SOKHIN, Valerii DEMBITSKYI, Valentyn PRYDIUK, Nadezhda KUNICINA, Nadezda ZENINA, Andrejs ROMANOVS, Jelena CAIKO, Igor MUROVANYI, Irina PAVLOVA, Oleg ZAKHARCHUK.

I-69 **Integrated course «Automotive Transport»:** Study guide for university students / Michael FRATITA, Chivu ROBERT-MADALIN, Viktor SAMOSTIAN etc. – Lutsk : Vezha-Print, 2025. – 1 electronic optical disk (CD-ROM). – Data volume 21,7 Mb.

ISBN 978-966-940-703-0

This document has been produced with the financial support of the European Union. The authors from Lutsk National Technical University, Riga Technical University, Dunarea de Jos of Galati, Kharkiv National Automobile and Highway University, Cahul State University B.P. Hasdeu are responsible for the content of this document. This publication reflects the views only of the authors and can in no way be taken to reflect the official position of the European Union. The book has been developed within the framework of the project "ERASMUS+ Capacity Building in Higher Education 2023", call for proposals 101127683-DIGITRANS-ERASMUS-EDU-2023-CBHE.

The textbook "Integrated Course in Automotiv Transport" is intended for students of higher education institutions of transport and engineering profile. It aims to form in students a holistic understanding of the functioning, organization and development of road transport as an important component of the state's transport system. The textbook provides integration of knowledge on technical, economic, organizational and environmental aspects of road transport activities.

The textbook can be used when studying basic and special academic disciplines, performing course and diploma projects, as well as as reference material in the practical activities of young specialists in the transport industry.

Key area: KA2 - Collaboration for innovation and exchange of best practices
Area: Capacity building in higher education
Area type: Joint projects
Output: 2.2. Development of electronic textbooks for students and teachers.

Under the Creative Commons Attribution license, authors and users are free to distribute (copy and distribute the material in any format) and adapt (remix, transform and use the material for any purpose, even commercial) this work. The licensor cannot revoke these freedoms, as long as you comply with the terms of the license.

UDC 629:656.13(075.8)

ISBN 978-966-940-703-0

© LNTU, 2025

Authors:

Michael FRATITA, PhD in mechanical engineering, lecturer at Department of Thermal Systems and Automotive Engineering, "Dunarea de Jos" University of Galati, Romania, michael.fratita@ugal.ro

Chivu ROBERT-MADALIN, PhD in mechanical engineering, assistant professor at Department of Thermal Systems and Automotive Engineering, "Dunarea de Jos" University of Galati, Romania, robert.chivu@ugal.ro

Viktor SAMOSTIAN, PhD in Engeneering, associate professor of Automobiles and Transport Technologies department, Lutsk National Technical University, svrmbf@gmail.com

Serhiy FEDOSOV, Doctor of Science in Physics and Mathematics, Professor, Professor of the Department of Basic Sciences, Lutsk National Technical University, fedosov.serhiy@gmail.com

Marina BUNEA, PhD in Technical Sciences, Associate professor of Department of Engineering and Applied Sciences, "Bogdan Petriceicu Hasdeu" State University of Cahul, e-mail: bunea.marina@usch.md,

Oleg SITOVSKYI, PhD. in Engineering, Assoc. Professor of Motor Cars and Transport Technologies Department, Lutsk National Technical University, e-mail: sitovsky@ukr.net

Vasyl PAVLIUK, PhD. in Engineering, Assoc. Professor of Automobiles and Transport Technologies Department, Lutsk National Technical University, e-mail: v.pavliuk@lutsk-ntu.com.ua

Stanislav PRYSTUPA, PhD. in Engineering, Associate Professor of the Department of Electronics and Telecommunications, Lutsk National Technical University E-mail: s.prystupa@lntu.edu.ua, LNTU

Valentyn ZABLOTSKYI Ph. D., Associate, Professor, Head of the Department of Electronics and Telecommunications. Faculty of Computer and Information Technologies, Lutsk National Technical University, v.zablotsky@lntu.edu.ua

Andrii HNATOV, professor, Dr. of Science, Head of Vehicle Electronics Department, Kharkiv National Automobile and Highway University, kalifus76@gmail.com

Arhun SHCHASIANA, professor, Dr. of Science, professor of Vehicle Electronics Department, Kharkiv National Automobile and Highway University, shasyana@gmail.com

Olha ULIANETS, Assistant of Vehicle Electronics Department, Kharkiv National Automobile and Highway University, 25, Yaroslav Mudry street, Kharkiv, Ukraine, olga.ulyanets@gmail.com

Pavlo SOKHIN, PhD,Senior lecturer of Vehicle Electronics Department, Kharkiv National Automobile and Highway University, paska1987@ukr.net

Valerii DEMBITSKYI, PhD. in Engineering associate professor of Motor Cars and Transport Technologies Department, Lutsk National Technical University, dvm2@meta.ua

Valentyn PRYDIUK, Ph.D in Engeneering, associate professor of Automobiles and Transport Technologies department, Lutsk National Technical University, e-mail: pred.mbf@gmail.com

Nadezhda KUNICINA, professor, senior researcher of Institute of Industrial Electronics, Electrical Engineering and Energy, Faculty of Computer Science, Information Technology and Energy, Riga Technical University, nadezda.kunicina@rtu.lv

Nadezda ZENINA, researcher of Institute of information technologies, Faculty of Computer Science, Information Technology and Energy, Riga Technical University, nadezda.zenina@rtu.lv

Andrejs ROMANOVS, associated professor, senior researcher of Institute of information technologies, Faculty of Computer Science, Information Technology and Energy, Riga Technical University, andrejs.romanovs@rtu.lv

Jelena CAIKO, senior researcher of Institute of Industrial Electronics, Electrical Engineering and Energy, Faculty of Computer Science, Information Technology and Energy, jelena.caiko@rtu.lv

Igor MUROVANYI, PhD. in Engineering, Assoc. Professor, Dean of the Faculty of Transport and Mechanical Engineering, Lutsk National Technical University, e-mail: igor_lntu@ukr.net

Irina PAVLOVA, PhD in Engineering, associate professor of Automobiles and Transport Technologies department, Lutsk National Technical University e-mail: Iruna_Pavlova@ukr.net

Oleg ZAKHARCHUK, PhD. in Engineering associate professor of Motor Cars and Transport Technologies Department, Lutsk National Technical University, Zaharchukov205@gmail.com

Project coordinator: Anatoliy Zabasta
Project supervisor: Nadiya Kunichina
Editors: Viktor Samostian, Valerii Dembitskyi
Institution: Lutsk National Technical University

CONTENT

Chapter 1 Engineering activity	***7***
1.1 History of road transport development.....	***10***
1.2 Classification of motor vehicles and trailer.....	***18***
1.3 Physical processes in road transport.....	***30***
1.4. Automotive materials.....	***107***
1.5 Interchangeability and technical measurements.....	***124***
Chapter 2 Construction of cars.....	***152***
2.1 General structure of wheeled vehicles.....	***152***
2.2. General structure and principles of operation of internal combustion engines.....	***154***
2.3 Transmision.....	***194***
2.4 Chassis, undercarriage.....	***220***
2.5 Control Mechanism.....	***232***
2.6 Air Conditioning and Heating Systems.....	***246***
2.7 Electrical and electronic systems of automobile.....	***256***
2.8 Electric power plants for vehicles.....	***316***
2.9 Frame and body.....	***338***
Chapter 3 Theory of the car.....	***342***
3.1 Main parameters of a vehicle.....	***342***
3.2 General dynamics of the vehicle.....	***346***
3.3 Traction-speed characteristics of the vehicle.....	***354***
3.4 Vehicle fuel efficiency.....	***365***
3.5 Vehicle traction calculation.....	***367***
3.6 Braking properties.....	***370***
3.7 Stability.....	***379***
3.8 Controllability.....	***385***

3.9 Critical speed of a vehicle under the condition of elastic tire angle slip.....	***391***
3.10. Maneuverability.....	***393***
3.11 Passability.....	***395***
3.12 Vehicles Suspension.....	***399***
3.13 Environmental friendliness.....	***403***
Chapter 4 Technical operation of cars.....	***405***
4.1 Theory of technical operation of cars.....	***405***
4.2 Maintenance and repair of cars.....	***412***
4.3 Main technological processes of parts recovery.....	***448***
Chapter 5 Organization and management of road transport.....	***471***
5.1 Road transport enterprises.....	***471***
5.2 Organization of production processes at road transport enterprises.....	***500***
5.3 Production process management.....	***507***
5.4 Quality of production processes.....	***520***
5.5 Management of activities in the field of road transport.....	***531***
5.6 Intelligent Transportation Systems role in supporting the development of smart city..	***535***
5.7 Transportation demand models and its characteristics.....	***536***
Chapter 6 Economics of road transport.....	***542***
6.1 General Provisions.....	***542***
6.2 Technical and Operational Indicators of Road Transport Usage.....	***543***
6.3 Technical and economic indicators of road transport.....	***549***

Chapter 1 Engineering activity

Motor transport is one of the most dynamic and essential areas of modern engineering, having a significant impact on the global economy, infrastructure and everyday life. The development and optimization of road vehicles requires advanced engineering expertise, combining knowledge from multiple disciplines, such as mechanics, electronics, computer science and advanced materials. The engineering activity in the field of motor transport aims at designing, testing and implementing innovative solutions that improve the performance, safety and efficiency of vehicles, while reducing their impact on the environment. Engineers in this sector are responsible for designing and optimizing heat and electric engines, developing active and passive safety systems, integrating smart technologies, and designing infrastructures compatible with the requirements of modern mobility. They are also working on implementing sustainable solutions, such as electric propulsion, the use of lightweight materials and reducing fuel consumption through advanced technologies.

Another important aspect of engineering activity in motor transport is the digitalization and automation of vehicles. Advances in artificial intelligence and connectivity are enabling the development of autonomous systems, which are revolutionising the way people interact with cars. Engineers design autonomous driving algorithms, obstacle detection systems, and intuitive interfaces for drivers, helping to increase safety and efficiency in traffic. In addition, car transport management requires engineering solutions for optimizing road infrastructure, managing traffic flows, and developing efficient public and private transport networks. Engineers collaborate with authorities and companies in the industry to improve infrastructure, reducing congestion and road accidents.

Thus, engineering activity in the field of motor transport is a fundamental pillar of technological progress and sustainable development. Engineers in this field play a key role in transforming modern mobility, providing innovative solutions for more efficient, safe and environmentally friendly transport.

Automotive vehicle design is a complex process that involves multiple engineering disciplines. Engineers must consider factors such as aerodynamics, materials used, impact resistance, and energy efficiency. For example, the use of computer simulations allows body shapes to be optimised to reduce drag, thus helping to improve fuel consumption. One of the major goals of automotive engineering is to improve the energy efficiency of vehicles. Through technological innovations, such as direct fuel injection, turbochargers and energy recovery systems, fuel consumption can be significantly reduced. At the same time, the adoption of Euro emission standards obliges manufacturers to develop cleaner engines with reduced CO_2 and NO_x emissions.

The materials used in the construction of vehicles have a direct impact on their weight and performance. Automotive engineers use lightweight aluminum alloys, carbon fiber, and composites to reduce the weight of vehicles without compromising their safety. Weight reduction contributes to lower fuel consumption and increased dynamic performance.

Before a vehicle enters series production, it must undergo rigorous testing. The tests include impact simulations, checking the strength of the components and evaluating performance under extreme conditions of temperature, humidity and pressure. The use of augmented reality and virtual tests has reduced the time and costs required to develop a new vehicle model.

Modern vehicles are equipped with advanced driver assistance systems, such as automatic emergency braking, lane keeping assist and adaptive cruise control. These technologies increase road safety and provide increased comfort for drivers. Automotive engineers are constantly developing new systems that use sensors, cameras, and artificial intelligence algorithms to improve the driving experience. Through these processes, the engineering activity in the field of car transport continues to advance, having a significant impact on the mobility of the future.

From the perspective of engineering activity, the development of propulsion and energy efficiency systems in the automotive and transport industry includes several directions. Modern combustion engines use emission control technologies such as particulate filters and catalytic converters, and adopt direct injection systems and turbochargers to increase performance and efficiency. These solutions allow for a more complete combustion of fuel, reducing losses and emissions. An important concept in this area is downsizing, which involves reducing the displacement of engines to achieve similar performance to larger engines, but with less fuel consumption and lower emissions. Alternative fuels, such as natural gas, biofuels and synthetic fuels, can also replace petrol and diesel, with a much smaller carbon footprint. Electric and hybrid vehicles have great potential in terms of energy efficiency. Electric vehicles emit no emissions to the wheels and are much more energy efficient compared to combustion engines. Hybrid vehicles combine a

combustion engine with an electric one, optimizing fuel consumption and reducing emissions. However, challenges remain related to the limited range of electric vehicles, charging time and dependence on electricity grids. Also, the performance of batteries can be affected in extreme conditions, such as low temperatures or heavy use. To support the widespread adoption of electric vehicles, an extensive system of fast and convenient charging stations is needed. The use of hydrogen is another important direction, especially through fuel cells, which converts hydrogen into electricity through an electrochemical process, having almost zero emissions, in the form of water. Although fuel cells are more efficient than heat engines, the process of producing, storing, and transporting hydrogen adds losses, and overall efficiency can be affected. However, this efficiency can be improved by using hydrogen produced from renewable sources. If hydrogen is produced from fossil sources without carbon capture, the environmental impact remains significant. These directions are interdependent and advancing in parallel, each with specific technical solutions to increase energy efficiency and reduce emissions in transport. Vehicle safety has evolved significantly due to the implementation of modern technologies, both in terms of passive and active safety. Passive safety refers to the elements that protect the occupants of the vehicle in the event of an accident. These include the body structure, which is designed to warp in a controlled manner during an impact, absorbing energy and protecting passengers. Absorbent materials are used in vehicle construction to lessen impact forces, reducing the risk of injury. Airbags are another important element of passive safety, activating quickly in the event of a collision to protect passengers' heads and chests. The seat belts, which are now equipped with automatic tensioning technology, complement the passive safety system, keeping occupants in safe positions during impact. Active safety refers to technologies that help prevent accidents before they occur. The Anti-lock Braking System (ABS) prevents the wheels from locking up during braking, ensuring that the vehicle remains manoeuvrable and stable, even in slippery road conditions. The Electronic Stability Control (ESP) system helps maintain the vehicle's grip and stability, preventing skidding and loss of control. Automatic Emergency Braking (AEB) detects possible collisions and applies the brakes automatically to reduce the severity of the accident or even avoid an impact. Assistance systems, such as lane keeping assist or lane change assist, help the driver stay focused and avoid risky manoeuvres.

To ensure the effectiveness of these technologies, the vehicles undergo rigorous crash tests, which are regulated by international safety standards. Euro NCAP is an example of an organization that conducts crash tests and gives vehicles scores based on their performance in frontal, side, and pedestrian impact scenarios. The tests are carried out using computer simulations, which allow the behaviour of the vehicle and passengers to be analysed in detail in the event of an accident, before the vehicle is manufactured or physically tested. These simulations are essential for the development of safer and more reliable vehicles, and international standards contribute to the continuous increase of safety in the industry.

The automation and digitalization of car transport is a constantly developing field, with a significant impact on the safety, efficiency and sustainability of transport. Autonomous vehicles are an essential component of this process and are classified into several levels of automation, from level 0 (no automation) to level 5 (full autonomy). Technologies used in autonomous vehicles include advanced sensors, such as cameras, radar, and lidar, which allow the vehicle to perceive the environment and make decisions in real time. Machine learning algorithms and artificial intelligence are used to process data collected from sensors and navigate the vehicle on the roads. The benefits of autonomous vehicles include reducing accidents caused by human error, improving traffic efficiency, and reducing emissions through smoother driving. However, there are risks related to the reliability of the technology, cybersecurity and ethical dilemmas in the event of accidents.

Artificial intelligence plays a key role in the automation of motor transport, especially in object recognition and predictive driving. Object recognition systems allow autonomous vehicles to identify pedestrians, cyclists, vehicles, and other obstacles in real time, improving safety. Predictive driving uses algorithms to predict the behaviors of other road users, adjusting the speed and direction of the vehicle to avoid conflicts or improve traffic flow. Artificial intelligence also helps to optimise fuel consumption and emissions by managing speed and stops more efficiently.

Traffic management systems are interconnected with vehicles and infrastructure through vehicle-to-infrastructure connectivity technology. These systems allow for the exchange of information between vehicles and traffic lights, information boards and other components of transport infrastructure, creating a more efficient flow of traffic. Within smart cities, the infrastructure is equipped with sensors and IoT (Internet of Things) technology, which monitor traffic conditions and allow real-time adjustment of signage to reduce congestion and prevent accidents. These systems can also optimize public transport through flexible routes and synchronization of means of transport, reducing waiting time and improving the

passenger experience. The automation and digitalisation of motor transport thus contribute to the creation of safer, more efficient and more sustainable cities, in which technology plays a central role in improving the quality of life.

In conclusion, the evolution of technologies in the field of car transport, from vehicle safety and automation, to the digitalisation of traffic systems, are fundamental steps towards a safer, more efficient and more sustainable future. Passive and active safety, along with rigorous crash tests, ensure passenger protection, while autonomous technologies, artificial intelligence and vehicle-to-infrastructure connectivity promise to revolutionize the way we interact with urban traffic and transport. With all the benefits of these innovations, there are also challenges related to implementation, safety and ethics, which must be carefully managed to ensure a positive impact in the long term. Thus, the integration of these technologies into a coherent transport system will address both the needs of energy efficiency and safety, as well as the urban challenges of the future.

1.1 History of road transport development

Most researchers of the history of the development of the world automotive industry accept periodization Fernanda Picard, what period 30 years led department projects companies "Renault". He proposed history world automotive industry to 1970 year divided into three periods. The first period is from the emergence of the automobile (conditionally - 1883) to the beginning of the First World War (1914) – an inventive one, which researchers and collectors divide into parts. The initial part of the first period of development is defined as "ancestors" (cars production to 1905 year), and friend part - "veterans"(Cars manufactured after 1905). The second period of world automotive history is designated as engineering (from 1918 to the mid-1940s), the third period is stylistic or designer (with 1945 on 1970 year). According to other sources, the IV period of development is engineering-stylistic (1970-2000 year), V period - revolutionary (with 2000 year on present time) (Fig. 1.1.1).

Each of these periods is marked by significant differences in the constituent conditions and situations that determine the course of development, change the design and dynamic constant development of the form of a mass passenger car. enough significantly in comparable with previous period time. In each period presenter the role of the vidya plays one or two with three participants – creators passenger car: engineer (designer and technologist), designer and customer - mass consumer through marketing (service manufacturer, related with consumer).

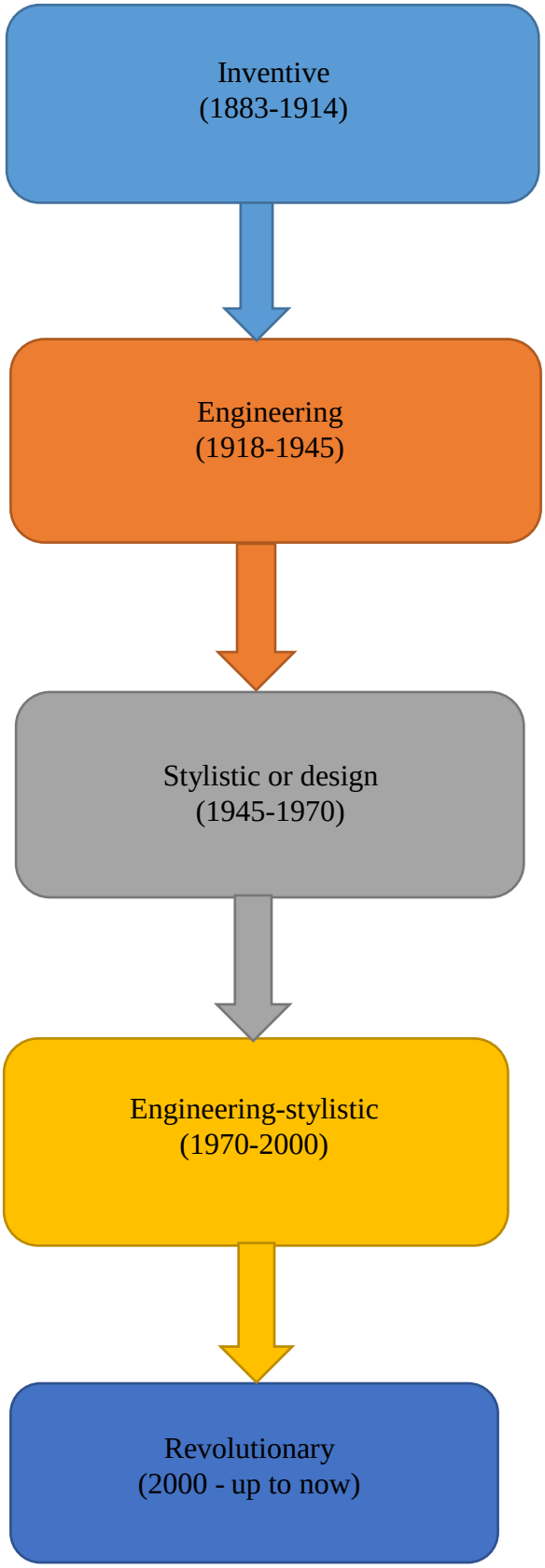

Figure 1.1.1 – Periods of general design development and forms passenger car car

In I period development (1883-1914 year) – inventive (Fig. 1.1.2), in features in initialits parts, marketing cars yet not existed, and was only need in satisfaction moving people and cargo new by means transport. But already early XX century river Ford pond one and with founders theoretical basics automotive marketing, take into account "beauty" car" (design) as goods. Basic effort in present period

time in this field were directed on proof engineering constructions passenger car to equal beginning massproduction.



Figure 1.1.2 – I period development of car shape design

In 1911, with the invention and introduction of the automobile assembly line by G. Ford, the mass passenger car began its existence: after the first 15 years production of passenger cars in 1913-1914, approximately 500 thousands, and in 1917 year only in USA - already 2 million.

The question of form (including artistic form) as such did not arise during this period, because design engineers and production workers were only interested in simplified ergonomic possibilities management by car and minimal convenience for passenger. About beauty in modern understanding at that time was not discussed, although already at the beginning of the twentieth century all passenger cars conditionally shared on two classes: "big" (more big on dimensions, more composition no on constructions and with big level comfort, especially for passengers) and "small" (simpler in design and lower cost, mainly used for permanent works: for example, for doctors, merchants and so. etc.).

The shape of a passenger car is inextricably linked to its design, especially bodywork. With construction "mechanics" (suspension, transmissions, steering management) and " energy" (engine and its systems) form related Less harshly, but enough aloud. Layout (placing and dimensions) all nodes and mechanisms car there are a rather limited argument for the future form. Its overall dimensions (length, width, height) are of great importance, as well as complementing physical: bases, tracks, overhangs front

and rear, enlightenment. Height and width car inin many ways depend and from comfort landings driver and passengers in salon.

In the second period of development (1918-1945 – engineering), engineering design and Technological issues were the main ones in the development of the passenger car (Fig. 1.1.3). By the mid-1940s, they had been largely resolved: several variants of passenger car layout solutions (classic and rear-wheel drive) had been sufficiently optimized and stabilized, and the technology for stamping body parts from sheet steel had been perfected. carrier and frame bodywork and other, worked out constructions "mechanics" and "energy".



Figure 1.1.3 – II period development of car shape design

Resolved were in this period time in most economically developed countries, the issue of automobile infrastructure: roads with hard, modern surfaces (in cities and outside cities), a network of stores, exhibitions and technical operational support maintenance, storage, traffic control system, motorsports and others, without whichimpossible further development passenger car.

Automotive marketing has developed. Marketing is a set of activities of a theoretical (research and information) and practical (recommendatory and managerial) nature. It allows us to understand how producer should organize process sales of your products, as it is necessary to conduct a campaign to promote new products on the market, what are the prices in which regions highest and etc.

G. Ford, as first marketer managed professionally to formulate the result of his mass-produced passenger car (the Ford Model T, which was produced more 20 years): he should be simple and strong, unpretentious in care and inexpensive, roomy enough and easy to manage. Its first service in the world automotive industry marketing already in 1920s years counted 60 people.

Automotive design in the second period of development (the period of its professional formation) decides important for his/her future task: looking for almost ten years (often with the help of designers and technologists) a unique image of a mass-produced passenger car, as different as possible from the previous mass-produced onekind transport - equestrian (cart, carriage and etc.), which will be him to respond to changes its next massive appearance transport. Excellent assistant him This is where science serves in the form of a new direction. aerodynamics - car.

In the III period of development (1945-1970), defined as stylistic, automotive design is one of the factors that create a passenger car (its design and shape), has its decisive position in the process of a compromise solution to change the form, in demand consumer (Fig. 1.1.4). This period officially marks the birth of the conceptual (predictive) automobile design.



Figure 1.1.4 – III period development of car shape design

The IV period (engineering-stylistic – 1970-2000) became the most noticeable for passenger car in development its constructions and forms (Fig. 1.1.5). IN constructions car Front-wheel drive layouts have become dominant, electrical and electronic systems have become paramount, and in engine systems, the ecological aspect is decisive. The technology of manufacturing parts and assembly is becoming increasingly more robotic and high-quality. Flexible manufacturing technology is being introduced passenger car: execution of many different models and modifications according to individual by order on one lines conveyor.

Consumer marketing component in requirement to changes The design became more rigid. But the need to change the shape of the passenger car during this period time becomes the most important, so by the end of the twentieth century it is common practice to repeated complete restyling of the body shape without radical changes to its " mechanics".



Figure 1.1.5 – IV period development of car shape design

The volume of work in the field of automotive design has increased dramatically, as has its role in creating new innovative passenger cars. The pace of work in the field of automotive design has also increased dramatically. The reduction in the terms of work in the exploratory creative phases of design was compensated only by the previously accumulated innovative ideas, developed mainly by conceptual design, and routine and preparatory works was laid down on electronic means.

The quality of work with implementation in the design field as an engineering and design, Yes and designer activities markedly improved. IN communication with hereby on junction centuries engineering and technical centers of large automotive companies have sharply reduced their numbers designers.

The fifth period of development of the world automobile industry (Fig. 1.1.6) – revolutionary (from 2000 to present time). In beginning XXI century essential engineering and design revolutionary changes took place in energy in the car complex: cars with a hybrid power plant were launched into mass production. With renewed vigor, society also paid attention to an alternative to internal combustion engines - electric batteries. Mass production was launched by many automobile companies, most automobile firms agreed on a universal charging network for electric cars around the world.



Figure 1.1.6 – V period development of car shape design

Road transport began its journey with the search for ways to mechanically move. The main technology at the time was steam engines, which were already used on railways, but adapting them for road transport was more difficult.

•1672 - Ferbiest's Steam Prototype: Chinese monk and scientist Ferbiest created a small, self-propelled steam-powered device. The invention was more of a toy, but it opened up new horizons in the use of mechanical energy.

•1769 - Cugnot's Steam Cart: French engineer Nicolas -Joseph Cugnot designed a three-wheeled vehicle with a steam engine. The machine could travel at speeds of up to 4 km/h and carry heavy loads, but due to its bulkiness and low practicality, it did not receive widespread use.

•1807 - First internal combustion engine: Frenchman François Isaac de Rivaz developed a prototype engine that ran on a mixture of hydrogen and oxygen. Although this engine did not become popular, it laid the foundation for future gasoline engines.

This period was experimental. The main problems were limited power, heavy weight, and difficulty in controlling.

The emergence of the internal combustion engine (19th century)

The internal combustion engine became the basis for the development of automobile transportation. Its invention made transportation more compact and practical.

•1876 - Otto engine: German engineer Nikolaus Otto developed a four-stroke engine that became the basis for gasoline engines. This engine was more efficient thanks to steam engines.

•1885 — Benz Patent-Motorwagen: Karl Benz created a three-wheeled car with a gasoline engine. This vehicle was the world's first officially registered automobile.

•1886 — Daimler Motor Carriage: Gottlieb Daimler and Wilhelm Maybach created the first four-wheeled automobile. It had a more powerful engine and looked like a modern horse-drawn carriage.

During this period, a revolution took place thanks to the transition to gasoline engines. Cars became more compact and technology became more accessible for further development.

Mass production (early 20th century)

At the beginning of the 20th century, cars remained expensive and only accessible to the wealthy. This situation changed thanks to mass production.

•1908 — Ford Model T: Henry Ford began assembly line production, which made cars much cheaper. Ford The Model T became the first "people's" car, affordable to the middle class. By 1927, over 15 million cars had been sold.

•Development of different types of cars: During this time, trucks, buses, and sports cars began to appear, creating diversity in the transportation sector.

•Improving road infrastructure: Demand for cars stimulates the construction of roads, bridges, and gas stations.

This period made cars accessible to the general public. Production became cheaper, and cars began to be actively integrated into everyday life.

Development of design and power (1920s–1950s)

With the development of technology, cars are evolving both in terms of design and technical characteristics.

•Aerodynamics: Cars were given streamlined shapes to reduce air resistance. These changes were especially noticeable in sports models.

•The emergence of leading brands: At this time, brands such as Ferrari (1947), Porsche (1931) and Jaguar entered the scene. They developed powerful cars with a focus on speed and style.

•Innovations in engines: The invention of the diesel engine by Rudolf Diesel paved the way for the development of commercial transportation. Diesel engines became popular in trucks and buses.

•Comfort and safety: Suspension and braking systems were improved, and the first cars with radios and air conditioning appeared.

This period was the "golden age" of classic cars. The market became used and the technology became diverse.

The era of electronics and security (1950s–1990s)

Since the second half of the 20th century, cars have begun to actively incorporate electronics.

•Safety systems: In 1959, Volvo introduced the three-point seat belt, which became a standard worldwide. Later, the airbag (1970s) and the anti-lock braking system (ABS) appeared.

•Electronic control systems: In the 1980s, electronic engine control units (ECUs) appeared, which increased the efficiency of the vehicle.

•Economy: Due to the oil crisis of the 1970s, automakers focused on reducing fuel consumption. The first compact models appeared, for example, Volkswagen Golf.

Cars became not only comfortable but also safe. Electronics began to play a key role in their operation.

Transition to sustainability (21st century)

In the 21st century, the emphasis has been on reducing the environmental impact of cars.

•Electric cars: Tesla pioneered the mass production of

•electric cars, demonstrating their efficiency and reliability.

•Hybrid cars: Toyota The Prius (1997) combined gasoline and electric engines, providing high efficiency.

•Hydrogen technologies: Development of fuel cell vehicles that run on water, such as Toyota Mirai has become a new trend.

•Autonomous systems: Tesla, Waymo, and other companies are developing self-driving cars that are capable of driving without a driver.

Modern cars focused on ecology, comfort and automation.

The future of road transport involves the development and use of artificial intelligence in cars and will become part of a "smart city", integrated into the transport infrastructure. New energy sources - in particular, solar energy - can become the main sources for cars of the future.

1.2 Classification of motor vehicles and trailers

Category L vehicles with fewer than four wheels

"Category L_1" (Fig. 1.2.1): a two-wheeled vehicle with an engine capacity of not more than 50 cm^3 in the case of an internal combustion engine and a maximum design speed of not more than 50 km/h in the case of any engine.



Figure 1.2.1 – L_1 category vehicle

"Category L_2" (Fig. 1.2.2): three-wheeled transport remedy with any location wheels, working volume engine which - in case engine internal combustion – does not exceed 50 cm^3 and maximum design speed – at any engine speed – does not exceed 50 km/h.



Figure 1.2.2 – L_2 category vehicle

"Category L_3" (Fig. 1.2.3): two-wheeled transport tool, working volume engine which - in case engine internal combustion – exceeds 50 cm^3 or maximum design speed – at any engine speed – exceeds 50 km/h.



Figure 1.2.3 – L_3 category vehicle

"Category L_4" (Fig. 1.2.4): vehicle with three wheels asymmetrical in relation to the median longitudinal plane, the engine capacity of which – in the case of an internal combustion engine – exceeds 50 cm^3 or the maximum design speed - for any engine – exceeds 50 km. /h (motorcycles with sidecar).



Figure 1.2.4 – L_4 category vehicle

"Category L_5" (Fig. 1.2.5): a vehicle with three wheels symmetrical in relation to the median longitudinal plane, the engine capacity of which, in the case of an internal combustion engine, exceeds 50 cm^3 or the maximum design speed, in the case of any engine, exceeds 50 km/h.



Figure 1.2.5 – L_5 category vehicle

"Category L_6" (Fig. 1.2.6): a vehicle with four wheels, the unladen mass of which does not exceed 350 kg, excluding the mass of the batteries in the case of an electric vehicle, the maximum design speed of which

does not exceed 45 km/h and is equipped with an engine with a cylinder capacity not exceeding 50 cm^3 if it is a spark-ignition internal combustion engine, or with an engine with a maximum effective power not exceeding 4 kW if it is an internal combustion engine of another type, or with an engine with a rated maximum continuous power not exceeding 4kW if it is an electric engine.



Figure 1.2.6 – L6 category vehicle

"Category L_7" (Fig. 1.2.7): a four-wheeled vehicle not falling within category L_6, the unladen mass of which does not exceed 400kg (550 kg for vehicles intended for the carriage of goods) excluding the mass of the batteries in the case of an electric vehicle and the rated maximum continuous power of which does not exceed 15kW.



Figure 1.2.7 – L_7 category vehicle

Category M – Motor vehicles having at least four wheels and used for the carriage of passengers

"Category M_1" (Fig. 1.2.8): vehicles used for the carriage of passengers and comprising no more than eight seats in addition to the driver's seat.



Figure 1.2.8 – M_1 category vehicle

"Category M_2" (Fig. 1.2.9): vehicles used for the carriage of passengers, comprising more than eight seats in addition to the driver's seat and having a maximum mass not exceeding 5 tonnes.



Figure 1.2.9 – M_2 category vehicle

"Category M_3" (Fig. 1.2.10): vehicles used for the carriage of passengers, comprising more than eight seats in addition to the driver's seat and having a maximum mass exceeding 5 tonnes.



Figure 1.2.10 – M_3 category vehicle

Vehicles of categories M_2 and M_3 are divided by passenger capacity and belong to the following classes.

Vehicles with a capacity of more than 22 passengers, excluding the driver, are divided into three classes (Fig. 1.2.11):

"*Class I* " (Fig. 1.2.11a): vehicles designed to accommodate standing passengers and allow them to move freely;

"*Class II* " (Figure 1.2.11b): vehicles designed primarily for the carriage of seated passengers and allowing the carriage of standing passengers in the gangway and/or in a standing area not exceeding the area provided for two double seats;

"*Class III* " (Fig. 1.2.11c): vehicles designed exclusively for the carriage of seated passengers.



a) b)



c)

Figure 1.2.11 – division of vehicles with a passenger capacity of more than 22 seats into classes

Vehicles may belong to more than one class, in which case they must be officially approved for each class to which they belong.

Vehicles with a capacity of no more than 22 passengers, excluding the driver, are divided into two classes (Fig. 1.2.12):

"*Class A*" (Fig. 1.2.12a): vehicles designed to carry standing passengers; a vehicle of this class is equipped with seats and must have a platform for standing passengers;

"*Class B*" (Fig. 1.2.12b): vehicles not designed to carry standing passengers; a vehicle of this class does not have a platform for accommodating standing passengers.



a) b)

Figure 1.2.12 – division of vehicles with a passenger capacity of no more than 22 seats into classes

"Category N_1" (Fig. 1.2.13): vehicles used for the carriage of goods and having a maximum mass not exceeding 3.5 tonnes.



Figure 1.2.13 – vehicle category N_1

"Category N_2" (Fig. 1.2.14): vehicles used for the carriage of goods and having a maximum mass exceeding 3.5 tonnes but not exceeding 12 tonnes.



Figure 1.2.14 – vehicle category N_2

"Category N_3" (Fig. 1.2.15): vehicles used for the carriage of goods and having a maximum mass exceeding 12 tonnes.



Figure 1.2.15 – vehicle category N_3

Category O – Trailers (including semi-trailers)

"Category O_1" (Fig. 1.2.16): trailers with a maximum mass not exceeding 0.75 t.



Figure 1.2.16 – O_1 vehicle

"Category O_2" (Fig. 1.2.17): trailers with a maximum mass exceeding 0.75 t but not exceeding 3.5 t.



Figure 1.2.17 – O_2 vehicle

"Category O_3" (Fig. 1.2.18): trailers with a maximum mass exceeding 3.5 tonnes but not exceeding 10 tonnes.



Figure 1.2.18 – O_3 vehicle

"Category O_4" (Fig. 1.2.19): trailers with a maximum mass of over 10 tonnes.



Figure 1.2.19 – O_4 vehicle

"*Special purpose vehicle*": a vehicle of category M, N or O intended for the carriage of passengers or goods, as well as for performing special functions requiring special bodywork and/or equipment.

"*Vehicle-house*" (Fig. 1.2.20): a special-purpose vehicle of category M1 , designed to include a living compartment containing at least the following equipment:

a)seat and table;

b) sleeping places that can be arranged from seats;

c) kitchen equipment; and

d) equipment and devices for storing property.

This equipment must be rigidly fixed in the accommodation compartment; the table may be easily removable.



Figure 1.2.20 – "Car-house"

"*Special purpose vehicle*"

"*Armoured vehicle*" (Fig. 1.2.21): a vehicle designed to protect passengers and/or cargo being transported and equipped with bulletproof armour plating.



Figure 1.2.21 – Armored vehicle

"*Ambulance*" (Fig. 1.2.22): a category M vehicle designed to transport sick or injured persons and equipped with special equipment.



Figure – 1.2.22 Ambulance

Hearse (Fig. 1.2.23): a vehicle designed to transport the deceased and equipped with special equipment.



Figure 1.2.23 – hearse

Agricultural vehicles (categories T, R and S)

"Category T" (Fig. 1.2.24): any motorized agricultural or forestry vehicle, wheeled or tracked, having at least two axles and a maximum design speed of at least 6 km/h, the main function of which is to produce tractive effort and which has been specially designed for towing, pushing, carrying or driving certain interchangeable machinery intended for agricultural or forestry work or for towing agricultural or forestry trailers or machinery; it may be adapted for the carriage of goods in connection with agricultural or forestry work and/or may be equipped with one or more passenger seats.



Figure 1.2.24 – Category T vehicle

"Category R - agricultural trailer" (Fig. 1.2.25): any agricultural or forestry vehicle which is intended primarily to be towed by a tractor and to transport goods or to process materials and in which the ratio between the technically permissible maximum laden mass and the unladen mass of that vehicle is at least 3.0.



Figure 1.2.25 – Category R - Agricultural trailer

"Category S - Interchangeable towed equipment" (Fig. 1.2.26): any vehicle used in agriculture or forestry which is designed to be towed by a tractor, modifies or supplements its functions, is equipped with any fixed mechanism or is intended for handling materials and may include a loading platform designed and constructed to accommodate any tools and devices necessary for these purposes, as well as for the temporary storage of any materials obtained or required during the work, and in which the ratio between the technically permissible maximum laden mass and the unladen mass of this vehicle is not less than 3.0.



Figure 1.2.26 – Category S – Interchangeable towed equipment

Category G – Off-road vehicles

Off-road vehicles include vehicles of categories M and N that meet the requirements of this category, compliance with which is checked under the conditions specified in paragraphs 2.8.2 and 2.8.3 of the UNECE.

Vehicles of category N_1 (Fig. 1.2.27a) with a maximum mass of not more than 2 tons, as well as vehicles of category M_1 (Fig. 1.2.27b) are considered off-road vehicles if they have:

(a) at least one front and one rear axle, the design of which ensures their simultaneous drive, including vehicles in which the drive of one axle can be disconnected;

(b) at least one differential locking mechanism or one mechanism of similar action; and

c) if they – in the case of a single vehicle – can overcome a 30% gradient.

d) In addition, they must meet at least five of the six requirements below:

1) the angle of entry is at least 25º;

2) the departure angle is at least 20º;

3) the angle of longitudinal patency is not less than 20;

4) ground clearance under the front axle is at least 180 mm;

5) ground clearance under the rear axle is at least 180 mm;

6) the interaxle ground clearance is at least 200 mm.



a) b)

Figure 1.2.27 – Off-road vehicles

Vehicles of category N_1 with a maximum mass exceeding 2 tonnes or vehicles of category N_2 (Fig. 1.2.28a), M_2 or M_3 (Fig. 1.2.28b) with a maximum mass not exceeding 12 tonnes are considered off-road vehicles if their design provides for simultaneous drive of all wheels, including vehicles in which the drive of one axle can be disconnected or if they meet the following three requirements:

a) at least one front and one rear axle have simultaneous drive, including vehicles in which the drive of one axle can be disconnected;

b) there is at least one differential locking mechanism or one mechanism of similar action;

c) they – in the case of a single vehicle – can overcome a gradient of 25%.



a) b)

Figure – 1.2.28 off-road vehicles

Vehicles of category M_3 with a maximum mass exceeding 12 tonnes or vehicles of category N_3 are considered off-road vehicles if their design provides for simultaneous drive of all wheels, including vehicles in which the drive of one axle can be disconnected, or if they comply with the following requirements:

a) at least half of the wheels are driven;

b) there is at least one differential locking mechanism or one mechanism of similar action;

c) they – in the case of a single vehicle – can overcome a gradient of 25%;

d) at least four of the following six requirements are met:

1) the angle of entry is at least 25º;

2) the departure angle is at least 25º;

3) the angle of longitudinal patency is not less than 25;

4) ground clearance under the front axle is at least 250 mm;

5) the interaxle ground clearance is at least 300 mm;

6) ground clearance under the rear axle is at least 250 mm.

Load and test conditions

"2.8.2.1 Vehicles of category N_1 with a maximum mass not exceeding 2 tonnes and vehicles of category M_1 must be in a ready state, i.e. filled with coolant, lubricant, fuel, equipped with tools and a spare wheel; the standard mass of the driver, which is assumed to be 75 kg, must also be taken into account.

2.8.2.2 Motor vehicles, other than those specified in paragraph 2.8.2.1, must be loaded to the technically permissible maximum mass established by the manufacturer.

2.8.2.3 The ability of the vehicle to overcome the prescribed gradient (25% and 30%) shall be confirmed by calculation. However, in exceptional cases, the technical services may require the submission of a vehicle of the appropriate type for actual testing.

2.8.2.4 When measuring the angles of the front and rear overhangs, as well as the longitudinal angle of clearance , anti-roll bars are not taken into account. [1]

"2.8.3 Definitions and drawings regarding the angles of the front and rear lights, as well as the longitudinal angle of the road and the ground clearance

2.8.3.1 " *Entry angle* " - see ISO 612:1978, clause 6.10.

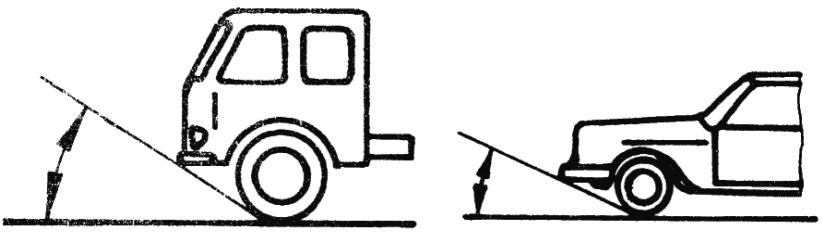

2.8.3.2 "*Departure angle* " - see ISO 612:1978, clause 6.11.

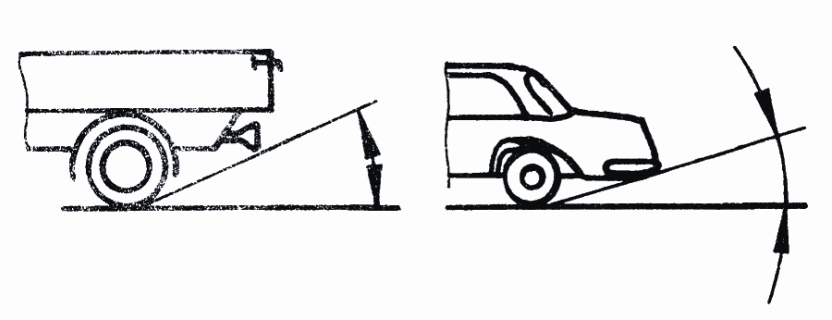

2.8.3.3 “*Longitudinal angle of clearance*” – see ISO 612:1978, clause 6.9.

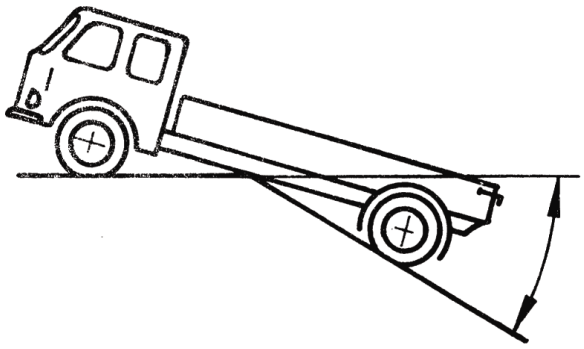

"*Wheelbase ground clearance*" means the shortest distance between the reference plane and the lowest point of the vehicle located on its rigid member

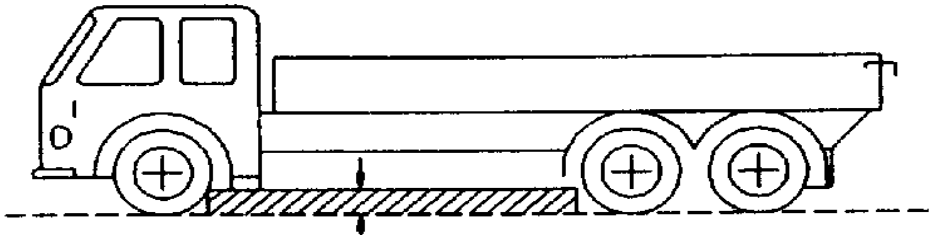

2.8.3.5 "*Ground clearance under one axle*" means the distance between the top point of the arc of a circle passing through the centres of the contact patches of the tyres of one

axle (in the case of dual tyres, the tyres of the inner wheels of the axle) and relating to the lowest point of the vehicle, rigidly fixed between the wheels, and the reference plane.

No rigid part of the vehicle must be within the shaded area of the drawing.

Road clearances under several axles are indicated in appropriate cases, based on the sequence of their location, for example 280/250/250." [1]

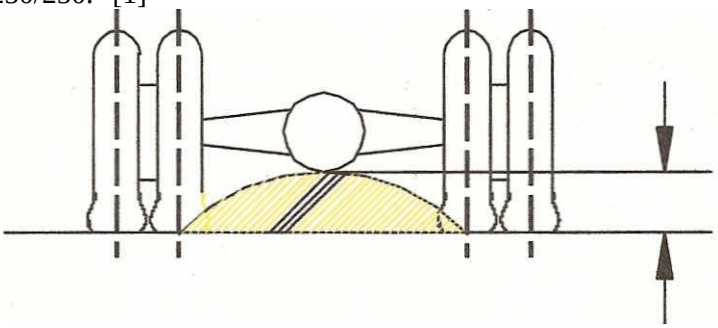

1.3 Physical processes in road transport

1.3.1 Physical theories underlying the design of the car

Even in those distant times, when European cities were besieged by people with muskets, some residents of these cities were engaged in mastering the secrets of nature, invisible to the outside eye. The moral of these words is this: *if you do not understand why you spend crazy money on the study of black holes or the search for the Higgs boson – keep in mind that less than a hundred years passed between the appearance of physical theories and a car, the design of which is based on these theories*.

1.3.1.1 Theory of oxygen combustion, 18th century.

It is common knowledge that oxygen is needed for the combustion of any fuel. But this is now, and five hundred years ago, no one particularly thought about such trifles. Cities and villages blazed merrily in the open air and everyone was happy. But in the 18th century, the first attempts to explain the physics of the process appeared. Initially, *phlogiston* was assigned to be responsible for combustion – some undiscovered particle that is contained in a substance and is released during combustion. Later, the theory was recognized as wrong, but it allowed many chemical reactions to be structured.

In 1771, the Swedish chemist Carl Scheele obtained oxygen for the first time (Fig. 1.3.1.1). Later, it was proved that it is he, and not the mythical phlogiston, that supports the combustion process. The theory of oxygen combustion is critical to internal combustion engines, where the fuel, as the name suggests, burns in an enclosed space.

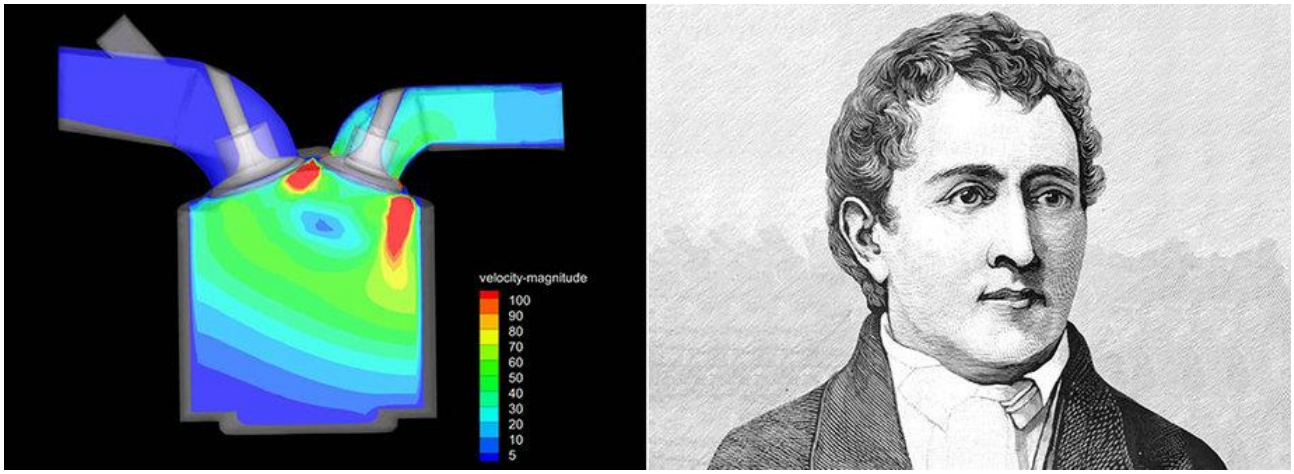

Figure 1.3.1.1 – Carl Wilhelm Scheele was the first to isolate oxygen, which is necessary for fuel combustion.

1.3.1.2 Thermodynamics, 19th century.

Another key principle on which the operation of the *internal combustion engine (ICE)* is based is the ability of liquids and gases to expand when heated. It is only necessary to fill the cylinder with a piston with air and heat it well – and the air, expanding, will start to move the piston. Gas heating can be achieved in another way – compression. If we feed a combustible mixture into the cylinder, compress it and then set it on fire, we will get a significant force acting on the piston.

All knowledge about similar properties of matter is combined in a section of physics called thermodynamics. The so-called thermodynamic cycles (Fig. 1.3.1.2) are of special value for motorists. Thermodynamic cycles describe in detail the processes of converting thermal energy into work (in the physical sense). *Otto*, *Diesel* and *Atkinson* cycles are of practical interest – the latter, for example, is used in Toyota hybrid engines.

1.3.1.3 Electrodynamics, 19th century.

If there is an *electric current* in any structure, then there will probably be a battery of arbitrary sizes or a generator or both. In a car, electricity is needed, first of all, to power spark plugs and peripheral devices such as headlights, turn signals, etc., but what about electric cars...

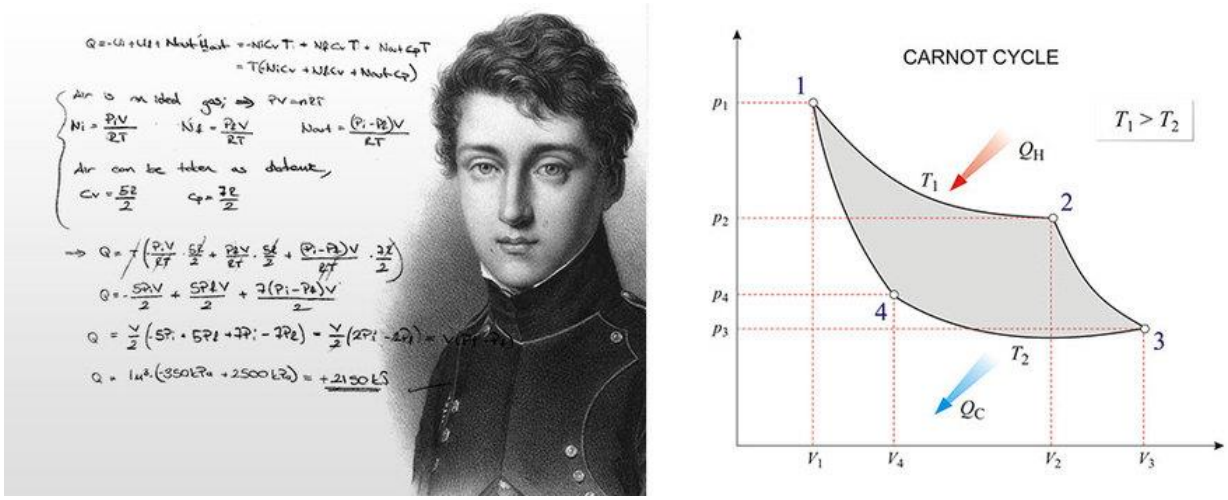

Figure 1.3.1.2 – Sadi Carnot lived for 36 years, but managed to calculate the first thermodynamic cycle of a heat engine.

The ability to obtain an electric current from an alternating magnetic field is based on *electrodynamics* – a separate section of physics. Electrodynamics is the study of electromagnetic fields and their associated effects. The founder of electrodynamics is the British scientist *Michael Faraday* (Fig. 1.3.1.3), who discovered in 1831 the phenomenon of *electromagnetic induction* – this is when a variable electromagnetic field generates an electric current. Subsequently, another British scientist, *James Maxwell*, had a great influence on the systematization of fragmentary knowledge into a clear theory.

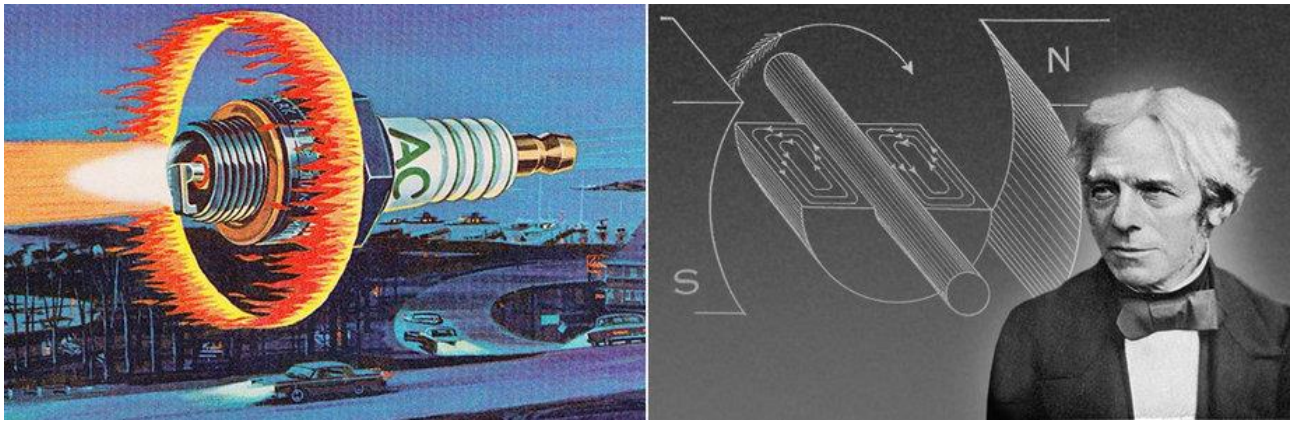

Figure 1.3.1.3 – If sparks ignite in cylinders, they do so thanks to Michael Faraday and other pioneers of electrodynamics.

1.3.1.4 Classical mechanics, 17th century.

Before Isaac Newton (Fig. 1.3.1.4), it was believed that every body strives for a state of rest, and to maintain a constant speed it is necessary to apply force to the body. But here, very conveniently, an apple fell on Newton's head, and he returned to the scientific community and said: this is not true, sir, let's do it in a new way.

In addition, before the *mechanics* developed by Newton, the concept of a state of rest becomes fictitious – any body that is not acted upon by forces moves at a constant speed. When *forces* are applied, the body is *accelerated*.

From this simple principle grew a completely scientific theory with its own laws and sections, among which *kinematics* is of particular interest – it will be very useful if you decide to start designing suspensions.

1.3.1.5 General and special theories of relativity, 20th century.

Everyone knows the sacred formula $E = m \times c^2$, but not everyone knows about the far-reaching consequences of *Einstein's theories of relativity* (Fig. 1.3.1.5) (and there were two of them). One such consequence is this: time is not a constant quantity and can either speed up or slow down. For example, with increasing speed, time slows down, and the clock moving away from the center of mass in a weaker gravitational field, on the contrary, goes faster. This information is very important for accurate positioning in satellite navigation systems that measure location by signal transit time, such as GPS.

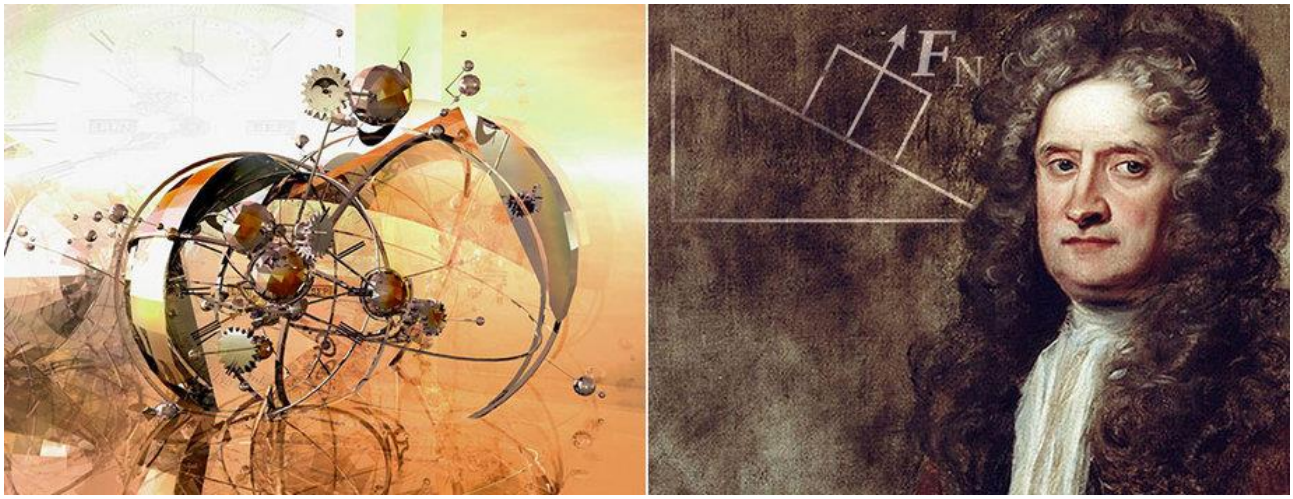

Figure 1.3.1.4 – They say that the story of the apple that fell on Newton's head is still fiction. However, this fact does not affect the reputation of this greatest of British scientists.

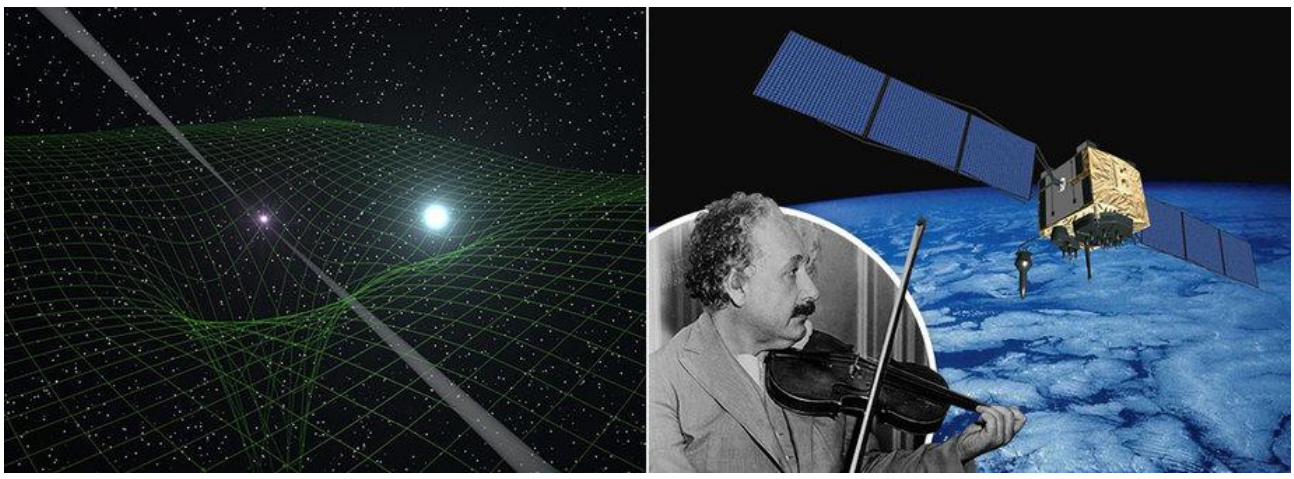

Figure 1.3.1.5 – Einstein, like no one else, knew how to combine the pleasant with the useful, although the work of his works became obvious to mere mortals half a century later.

It is known that clocks at the orbital altitudes of GPS satellites run faster by 45 thousand nanoseconds per day compared to the clock on the Earth's surface. At the same time, due to the speed relative to the Earth, they also slow down by 722 ns per day. These corrections are built into the calculations, so you can trust GPS more than yourself. Everyone is satisfied. But where would we all be if Einstein had chosen a career as a violinist?

1.3.2 Basic equations of mechanics

1.3.2.1 Rectilinear motion and rotary motional.

A *trajectory* is an imaginary line that a material point (point, body) describes during movement. Depending on the trajectory, *rectilinear* and *curvilinear* motion are distinguished. Therefore, any arbitrary motion is a combination of successive *rectilinear* body movements and sections where the body moves in a circle – *rotational* (Fig. 1.3.2.1). The main parameters that characterize these movements are given in Table 1.3.2.1.

The *length of path* (*path*) (from English *spacetime interval*) is the distance traveled by a point in a certain period of time and which is measured along the trajectory. The unit of measurement [s] is m (meter).

During the motion of a material point in the Cartesian system (*Oxyz*), its coordinates (and hence the distance from the origin to the point) are constantly changing. Therefore, in general terms, the motion is given by a system of three independent equations:

$$\begin{cases} x = f_1(t) \\ y = f_2(t) \\ z = f_3(t) \end{cases} \text{or} \begin{cases} x = x(t) \\ y = y(t). \\ z = z(t) \end{cases}$$

Instead of three equations describing the position of a point during its motion, one vector equation is used (Fig. 1.3.2.2):

$$\vec{r} = \vec{r}(t).$$

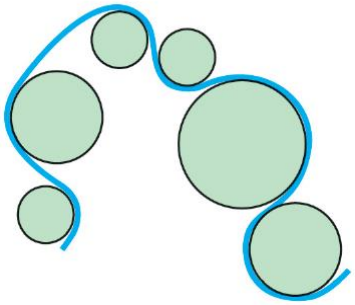

Figure 1.3.2.1 – A combination of sequential body movements.

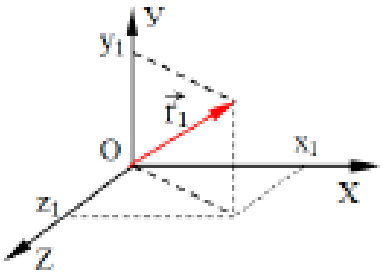

Figure 1.3.2.2 – Position of a point at a time.

Displacement $\Delta\vec{r}$ is a vector drawn from the initial position of a moving point to its position at a given moment in time:

$$\Delta\vec{r} = \vec{r} - \vec{r}_0,$$

where $\vec{r}$ and $\vec{r}_0$ are radius vectors.

The trajectory, path length, and displacement are shown in Fig. 1.3.2.3. If the trajectory described a rectilinear motion, the absolute value of the displacement vector would be equal to the path traveled by the point:

$$|\Delta\vec{r}| = s.$$

Uniform motion is motion in which the velocity υ or rotational speed (frequency of rotation) ν is constant.

Table 1.3.2.1 – Rectilinear motion and rotary motion.

Rectilinear motion (displacement)	Rotary motion
Mass $m = V \cdot \rho$	Moment of inertia (Table 1.3.2.2) $J = m \cdot r^2$
Distance (Length of path) $s = \int \upsilon(t) \cdot dt$ $s = \upsilon \cdot t$ [$\upsilon = \text{const.}$] $s = \frac{1}{2} \cdot a \cdot t^2$ [$a = \text{const.}$]	Angle (Angular displacement) $\varphi = \int \omega(t) \cdot dt$ $\varphi = \omega \cdot t = 2\pi \cdot n$ [$\nu = \text{const.}$] $\varphi = \frac{1}{2} \cdot \varepsilon \cdot t^2$ [$\varepsilon = \text{const.}$]
Velocity $\upsilon = \frac{ds}{dt}$ $\upsilon = \frac{s}{t}$ [$\upsilon = \text{const.}$] $\upsilon = a \cdot t = \sqrt{2a \cdot s}$ [$a = \text{const.}$]	Angular velocity $\omega = \frac{d\varphi}{dt}$ $\omega = \frac{\varphi}{t}$ [$\nu = \text{const.}$] $\omega = \varepsilon \cdot t = \sqrt{2\varepsilon \cdot \varphi}$ [$\varepsilon = \text{const.}$] linear velocity of an arbitrary point of a rotating body (Peripheral velocity) $\upsilon = r \cdot \omega$
Acceleration $a = \frac{d\upsilon}{dt}$ $a = \frac{\upsilon_2 - \upsilon_1}{t}$ [$a = \text{const.}$]	Angular acceleration $\varepsilon = \frac{d\omega}{dt}$ $\varepsilon = \frac{\omega_2 - \omega_1}{t}$ [$\varepsilon = \text{const.}$] Centrifugal acceleration $a_n = \frac{\upsilon^2}{r} = r \cdot \omega^2$
Force $F = m \cdot a$	Torque $M = F \cdot r = J \cdot \varepsilon$ Centrifugal force $F = m \cdot r \cdot \omega^2$
Work $A = F \cdot s$	Work $A = M \cdot \varphi$
Kinetic energy $E_k = \frac{1}{2} \cdot m \cdot \upsilon^2$ Potential energy $E_p = F_0 \cdot h$	Energy of rotation $E_k = E_{rot} = \frac{1}{2} \cdot J \cdot \omega^2$
Power $P = F \cdot \upsilon$	Power $P = M \cdot \omega = M \cdot 2\pi \cdot \nu$
Linear momentum $p = m \cdot \upsilon$	Angular momentum $L = J \cdot \omega = J \cdot 2\pi \cdot \nu$

Kinematics of rectilinear motion. For *uniform rectilinear motion*, a body travels the same distance s along a straight line in equal intervals of time t. This is the motion of a body with *constant velocity*

$$\upsilon = \frac{s}{t},$$

its displacement [$s = x - x_0$] is calculated by the equation:

$$s = \upsilon \cdot t\,,$$

and the coordinate changes with time according to the law (*equation of motion*):

$$x = x_0 + \upsilon \cdot t\,.$$

The *velocity of the point* $\vec{\upsilon}$ (from Latin ***v**elocitas*) is a physical quantity that characterizes the velocity of movement and is calculated by the ratio of movement $\Delta\vec{r}$ to time (or time interval Δt) (from Latin ***t**empus*) (Fig. 1.3.2.4):

$$\vec{\upsilon} = \frac{\Delta\vec{r}}{\Delta t}\,.$$

The unit of measurement of velocity [υ] is m · s^{-1} or m/s (meter/second).

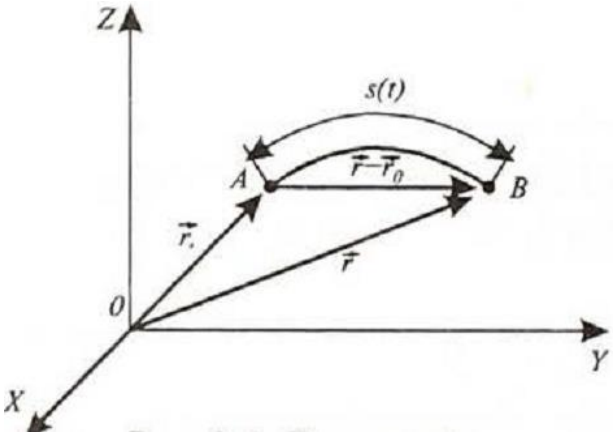

Figure 1.3.2.3 – Trajectory, path length and displacement.

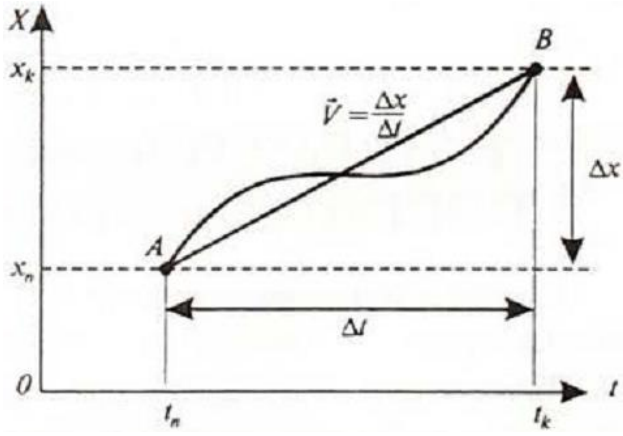

Figure 1.3.2.4 – Mean velocity.

For *uniform rectilinear acceleration*, the velocity of a body increases (or decreases) by the same amount in any equal intervals of time. Motion with constant acceleration is *uniformly accelerated*. For uniformly retarded motion acceleration is negative (motion is *uniformly decelerated*). This change in velocity is characterized by a quantity called *acceleration*:

$$a = \frac{\upsilon - \upsilon_0}{t} = \frac{\Delta\upsilon}{t}\,,$$

where υ_0 is *initial velocity*; υ is *final velocity* of the body.

Acceleration $\vec{a}$ (from Latin ***a**cceleratio*) is equal to the first derivative of the velocity $\vec{\upsilon}$ of a point with respect to time t. (Fig. 1.3.2.5):

$$\vec{a} = \lim_{\Delta t \to 0} \frac{\Delta\vec{\upsilon}}{\Delta t} = \frac{d\vec{\upsilon}}{dt}\,, a = \upsilon'\,.$$

The unit of measurement for acceleration [a] is m · s^{-2} or m/s^2 (meter/square second).

Mean and instantaneous velocities are used to characterize non-uniform motion.

Mean velocity $\langle\upsilon\rangle$ is the ratio of the total distance traveled s to the total travel time t (Fig. 1.3.2.4):

$$\langle \upsilon \rangle = \frac{s_1 + s_2 + ... + s_N}{t_1 + t_2 + ... + t_N} = \frac{s}{t}.$$

The *instantaneous velocity of a point* $\vec{\upsilon}$ is equal to the first derivative of the radius vector (path) with respect to time:

$$\upsilon = \lim_{\Delta t \to 0} \frac{\Delta r}{\Delta t} = \lim_{\Delta t \to 0} \frac{\Delta s}{\Delta t} = \frac{ds}{dt} = s' \text{ and therefore } s = \int \upsilon(t) \cdot dt .$$

When a body moves with constant acceleration [$a = \text{const.}$], its velocity and path change over time according to the laws:

$$\upsilon = \upsilon_0 + a \cdot t \, , s = \upsilon_0 \cdot t + \frac{a \cdot t^2}{2},$$

and the coordinate [$s = x - x_0$] changes with time according to the law (*equation of motion*):

$$x = x_0 + \upsilon_0 \cdot t + \frac{a \cdot t^2}{2}.$$

When $\upsilon_0 = 0$

$$\upsilon = a \cdot t \, , s = \frac{a \cdot t^2}{2}.$$

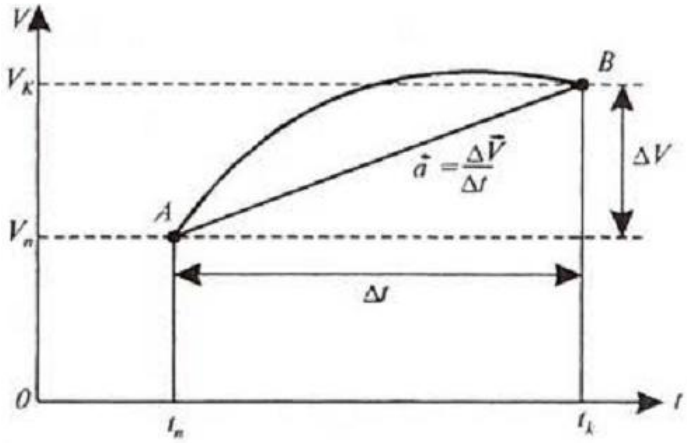

Figure 1.3.2.5 – Mean acceleration.

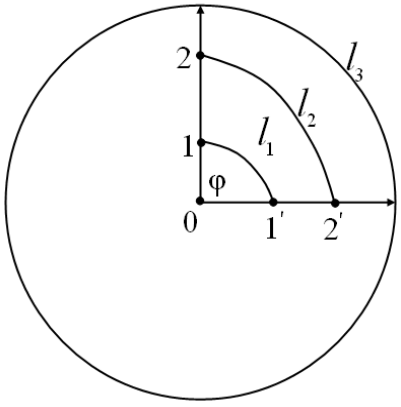

Figure 1.3.2.6 – Rotary motion.

Kinematics of rotary motion. *Rotary motion of a solid body* is called its motion in which all the points that make up the body describe circles whose centers lie on a straight line called the axis of rotation (Fig. 1.3.2.6).

As can be seen from Fig. 1.3.2.6, points *1* and *2* have different linear velocities υ, because in the same time they pass through the corresponding arc sections $l_1 < l_2 < l_3$. The angular velocity of rotation for these points will be the same.

The *angular velocity* ω of a point moving uniformly in a circle is given by the equation:

$$\omega = \frac{\varphi}{t},$$

where φ is the angle through which the body has rotated during the time t.

This angle is called the *angular displacement* or *angle of rotation* of the material point. The unit of measurement for angle of rotation [φ] is rad (radian).

The change in the angle of rotation over time is called the equation of the *rotary motion* of a solid:

$$\varphi = \varphi(t).$$

Therefore, to describe rotary motion, using only linear (for rectilinear motion) parameters is insufficient. To characterize uniform and non-uniform rotary motion, kinematic parameters of rotary motion are used.

Angular velocity $\vec{\omega}$ is a vector quantity equal to the first derivative of the angle of rotation of a body with respect to time:

$$\vec{\omega} = \lim_{\Delta t \to 0} \frac{\Delta \vec{\varphi}}{\Delta t} = \frac{d\vec{\varphi}}{dt}.$$

The unit of measurement of angular velocity [ω] is rad · s^{-1} or rad/s.

For bodies that make many rotations that are performed with a periodic dependence, quantities called the *period of rotation* and the *frequency of rotation* are introduced.

The *period of rotation* T is the time during which the body makes one complete revolution around the circle ([T] – 1 s). If the body makes n revolutions, then the period is determined by:

$$T = \frac{t}{n}.$$

The value ν, inverse to the rotation period, is called the *rotation frequency* and is measured in the number of revolutions per unit of time:

$$\nu = \frac{1}{T}.$$

The unit of measurement for rotation frequency [ν] is 1 s^{-1} = 1 Hz (hertz).

Angular acceleration $\vec{\varepsilon}$ is a vector quantity equal to the first derivative of angular velocity with time:

$$\vec{\varepsilon} = \frac{d\vec{\omega}}{dt}.$$

The unit of measurement of angular acceleration [ε] is rad · s^{-2} or rad/s^2.

If the body rotates while accelerating ($\varepsilon > 0$), then the vector $\vec{\varepsilon}$ is directed along the axis in the same direction as $\vec{\omega}$ (Fig. 1.3.2.7a), while decelerating ($\varepsilon < 0$), it is directed in the opposite direction (Fig. 1.3.2.7b).

There is a relationship between the quantities characterizing translational and rotational motion. The length of the arc (the distance traveled s) is related to the radius and the angle of its rotation by the ratio:

$$s = r \cdot \varphi, \text{then } \upsilon = r \cdot \omega.$$

The direction of the vector $\vec{\upsilon}$ relative to the vectors $\vec{\omega}$ and $\vec{r}$ is shown in Fig. 1.3.2.8.



Figure 1.3.2.7 – Direction of vectors $\vec{\varepsilon}$ and $\vec{\omega}$ in rotary (a) accelerated motion and (b) retarded motion.

The curvilinear motion of a material point is characterized by *tangential* a_T and *normal (centripetal)* a_N accelerations:

$$a_T = \frac{d\upsilon}{dt}, a_N = \frac{\upsilon^2}{r}.$$

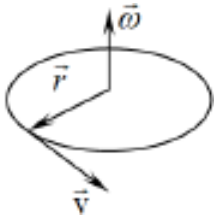

Figure 1.3.2.8 – Direction of a vector $\vec{\upsilon}$ relative to vectors $\vec{\omega}$ and $\vec{r}$.

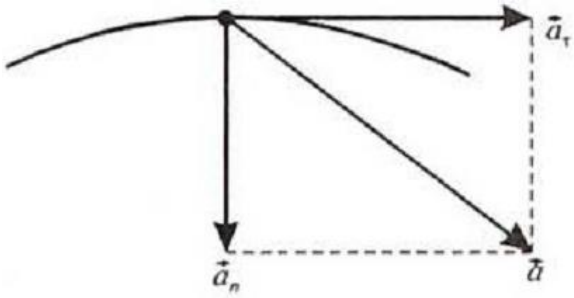

Figure 1.3.2.9 – Total acceleration of a point during curved motion:
a_T – Tangential acceleration; a_N – Normal acceleration.

The *total acceleration* a of a material point during curvilinear motion is determined as follows (Fig. 1.3.2.9):

$$a = |\vec{a}| = \sqrt{a_T^2 + a_N^2} = \sqrt{\left(\frac{d\upsilon}{dt}\right)^2 + \left(\frac{\upsilon^2}{r}\right)^2}.$$

Accordingly, *tangential* a_T and *normal* (*centrifugal*) a_N accelerations are related to angular quantities:

$$a_T = r \cdot \varepsilon, a_N = \frac{\upsilon^2}{r} = r \cdot \omega^2.$$

The similarity of kinematic formulas for translational and rotational motion allows us to obtain the main parameters that characterize uniform and non-uniform rotational motion (see Table 1.3.2.1).

Dynamics of rectilinear motion. Dynamics is based on Newton's three laws.

Newton's first Law: *any material point (body) maintains a state of rest or uniform rectilinear motion until the action of other bodies forces it to change this state*.

The property of bodies to maintain a state of rest or uniform rectilinear motion is called *inertia*.

Force $\vec{F}$ (from Latin ***F**ortis*) is a physical quantity that characterizes the action of one body on another; the result of applying force to a body is the acceleration or deformation of the body. The unit of measurement of force [F] is N (newton).

Body mass m (from Latin ***m**assa*) is a physical quantity that is one of the main characteristics of matter, determining its inertial and gravitational properties. The unit of measurement of mass [m] is kg (kilogram).

Density of a substance ρ is the mass per unit volume:

$$\rho = \frac{m}{V},$$

where m is the body mass; V (from Latin ***V**olumen*) is the body volume.

N e w t o n ' s s e c o n d L a w : *the acceleration acquired by a material point (body) is proportional to the force that causes this acceleration, coincides with it in direction, and is inversely proportional to the mass of the material point (body)*:

$$\vec{a} = \frac{\vec{F}}{m}.$$

The last equation can be written as follows:

$$\vec{F} = m \cdot \vec{a}. \qquad (1.3.2.1)$$

A *centripetal (normal) force* acts on a body moving in a circle (*curvilinear motion*):

$$F_N = m \cdot a_N = m \cdot \frac{\upsilon^2}{r}.$$

N e w t o n ' s t h i r d L a w : *any action of material points (bodies) on each other has the character of interaction; the forces with which material points (bodies) act on each other are always equal in magnitude, opposite in direction and act along the straight line connecting these points (bodies)*:

$$\vec{F}_{21} = -\vec{F}_{12}.$$

A mechanical system on which no external forces act is called *closed*. For a system of material points, Eq. 1.3.2.1 can be written as follows:

$$\frac{d(m \cdot \vec{\upsilon})}{dt} = \vec{F}_{ext},$$

where $\vec{F}_{ext} = \sum(\vec{F}_i)_{ext}$ is the main vector of external forces. For a closed system of material points we have $\vec{F}_{ext} = 0$, hence $\frac{d(m \cdot \vec{\upsilon})}{dt} = 0$, or $m \cdot \vec{\upsilon} = \sum(m_i \cdot \vec{\upsilon}_i) = \text{const}$, i.e. the *momentum* $m \cdot \vec{\upsilon}$ *of the closed system does not change with time* (t h e l a w o f c o n s e r v a t i o n o f m o m e n t u m o f a c l o s e d s y s t e m).

Work, power, and energy. *Work of force* A (from German ***A**rbeit* or French ***A**ction*) is a measure of the action of a force, which depends on the numerical value and direction of the force and on the displacement of the point of its application.

If a body moves in a straight line and is acted upon by a constant force $\vec{F}$ that makes a certain angle α with the direction of movement, then the work of this force is defined as the scalar product of the force vector $\vec{F}$ by the displacement vector $\vec{r}$:

$$A = \vec{F} \cdot \vec{r},$$

or

$$A = \left|\vec{F}\right| \cos\alpha \cdot \left|\vec{r}\right| = F \cdot \cos\alpha \cdot s = F_s \cdot s,$$

where F_s is the projection of vector $\vec{F}$ onto the direction of the vector $\vec{r}$. The unit of work [A] is J = N · m (joule).

The *power of a force* P (from Latin ***P**otentia*) is the ratio of the work A performed by this force $\vec{F}$ over a period of time to its duration t:

$$P = \frac{A}{t} = \frac{\vec{F} \cdot \vec{r}}{t} = \vec{F} \cdot \vec{\upsilon} = F \cdot \upsilon \cdot \cos\alpha.$$

The unit of measurement of power [P] is W = J · s^{-1} or J/s (watt).

Energy E (from Latin ***E**nergīa*) is a physical quantity that is a general measure of the motion and interaction of all types of matter.

Kinetic energy E_k of a mechanical system is the energy of mechanical movement of this system (*displacement energy*):

$$E_k = \frac{m \cdot \upsilon^2}{2}.$$

Potential energy E_p is the mechanical energy of a system of bodies, determined by their mutual arrangement and the nature of the forces of interaction between them:

$$E_p = F_G \cdot h = m \cdot g \cdot h.$$

If the work done by forces when moving a body from one position to another does not depend on the trajectory along which this movement occurred, but depends only on the initial and final positions, then such forces are called *conservative*.

The law of conservation of energy in mechanics: *the total mechanical energy* E *of a closed system of bodies between which only conservative forces act remains constant*:

$$E = E_k + E_p = \text{constor}\, \Delta E_k + \Delta E_p = 0.$$

Dynamics of rotary motion. The dynamic characteristic of a rotating solid body is *the moment of inertia* J or I (from Latin ***I**nertia*) – the sum of the products of the masses m_i of the material points that make up the body, per square of their distance from the axis of rotation:

$$I = \sum\left(m_i \cdot r_i^2\right).$$

For an arbitrary body, the moment of inertia will be:

$$I = \int r^2 \cdot dm.$$

The unit of measurement for the moment of inertia [I] is kg · m^2 (kilogram per square meter).

Table 1.3.2.2 presents the formulas for the moments of inertia of some homogeneous bodies of mass m relative to the axes of symmetry passing through the center of mass.

Steiner's theorem: *the moment of inertia* I *of a body with respect to any axis of rotation is equal to its moment of inertia* I_0 *relative to a parallel axis passing through the center of mass O of the body,*

multiplied by the product of the body's mass m *and the square of the distance* d *between the axes* (Fig. 1.3.2.10).

Table 1.3.2.2 – Moments of inertia.

Type of body		Moments of inertia (J_x about the x-axis, J_y about the y-axis)
Rectangular parallelepiped, cuboid	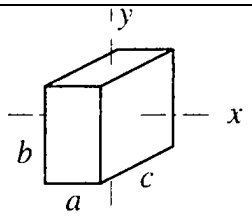	$J_x = m \cdot \frac{b^2 + c^2}{12}$ $J_y = m \cdot \frac{a^2 + c^2}{12}$ $J_x = J_y = m \cdot \frac{a^2}{6}$ (Cube with side length a)
Regular cylinder	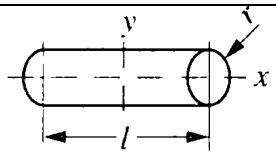	$J_x = m \cdot \frac{r^2}{2}$ $J_y = m \cdot \frac{r^2 + l^2}{12}$
Hollow regular cylinder	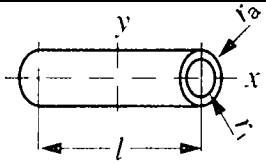	$J_x = m \cdot \frac{r_a^2 + r_i^2}{2}$ $J_y = m \cdot \frac{r_a^2 + r_i^2 + l^2/3}{4}$
Circular cone	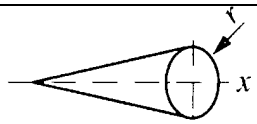	$J_x = m \cdot \frac{3r^2}{10}$ $J_x = m \cdot \frac{r^2}{2}$ Envelope of cone(excluding end base)
Frustrum of circular cone	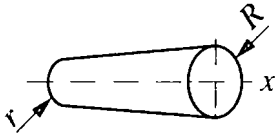	$J_x = m \cdot \frac{3\left(R^5 - r^5\right)}{10\left(R^3 - r^3\right)}$ $J_x = m \cdot \frac{\left(R^2 + r^2\right)}{2}$ Envelope of cone(excluding end faces)
Pyramid	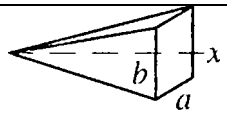	$J_x = m \cdot \frac{a^2 + b^2}{20}$
Sphere and hemisphere	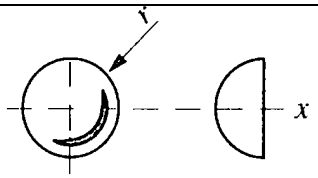	$J_x = m \cdot \frac{2r^2}{5}$ $J_x = m \cdot \frac{2r^2}{3}$ Surface area of sphere
Hollow sphere	r_a – outer sphere radius r_i – inner sphere radius	$J_x = m \cdot \frac{2\left(r_a^5 - r_i^5\right)}{5\left(r_a^3 - r_i^3\right)}$
Cylindrical ring	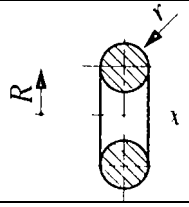	$J_x = m \cdot \left(R^2 + \frac{3}{4} \cdot r^2 \right)$

$$I = I_0 + m \cdot d^2 .$$

Kinetic energy of rotation is calculated:

$$E_{rot} = \frac{I \cdot \omega^2}{2} .$$

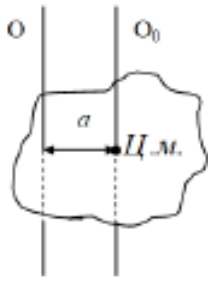

Figure 1.3.2.10 – To explain Steiner's theorem:
I – Moment of inertia of a body relative to an arbitrary axis of rotation;
I_0 – Moment of inertia about a parallel axis passing through the center of mass of the body;
d – Distance between axles.

The *moment* $\vec{M}$ (from the English ***M**oment of force*) *of force* $\vec{F}$ relative to a fixed point *O* is the vector product of the radius vector $\vec{r}$ drawn from point *O* to the point of application of the force $\vec{F}$:

$$\vec{M} = \left[\vec{r} \times \vec{F}\right] \text{or} M = r \cdot F \cdot \sin\alpha .$$

Unit of measurement of moment of force [M] – N · m (newtonmeter).

The basic equation of rotational dynamics (the formula for the moment of force is represented in terms of the moment of inertia):

$$\vec{M} = I \cdot \vec{\varepsilon} \text{ or } M = I \cdot \varepsilon ,$$

where I is moment of inertia of a rotating body; $\vec{\varepsilon}$ is angular acceleration.

The last equation can be rewritten as:

$$M = I \cdot \frac{d\omega}{dt} = \frac{dL}{dt} ,$$

where

$$M \cdot dt = I \cdot d\omega .$$

The Law of conservation of angular momentum in mechanics: *for a closed system, the angular momentum* $I \cdot \omega = L$ *relative to a fixed point does not change with time.* Indeed, for a closed system we have $\vec{M} = 0$, hence $\vec{M} \cdot dt = 0$, whence

$$d\left(I \cdot \omega\right) = dL = 0, L = \text{const}.$$

1.3.2.2 Transmission of force.

The operation of mechanisms for transmitting force can be reduced to the use of the *lever principle* and the *wedge principle*.

Lever Law. The *lever* is the simplest mechanism that allows a smaller force to balance a larger one; a movable bar that pivots on a fulcrum attached to a fixed point (Fig. 1.3.2.11).

The *arm of force* or the *length of the lever arm* is the shortest distance between the axis of rotation and the direction of force action.

A force applied perpendicularly to a lever multiplied by its distance from the lever's fulcrum (the length of the lever arm) is its *torque* or *moment of force*:

$$M = F \cdot l \text{ or } M = F \cdot r .$$

If the fulcrum is located between the points of application of the forces, then this is a lever of the Class I; if both forces are applied on one side of the fulcrum, then this is a rotary second-class lever.

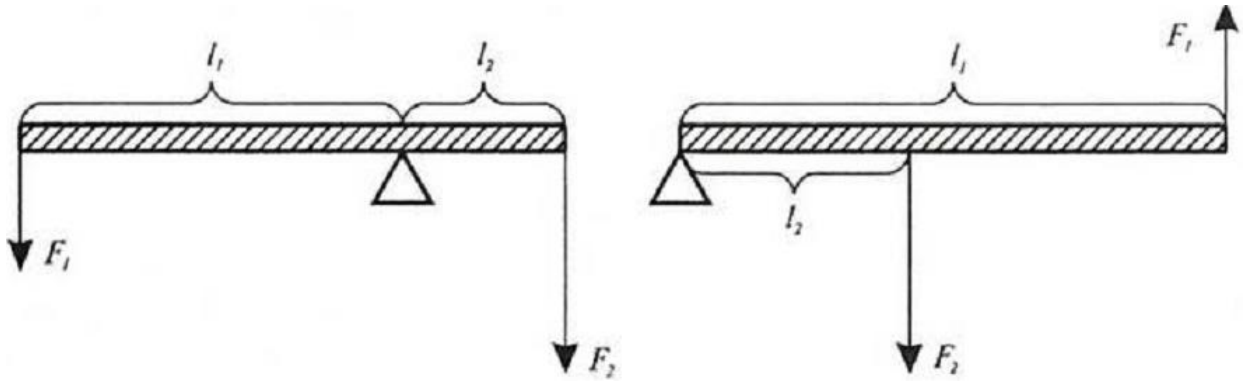

Figure 1.3.2.11 – Types (classification) of levers:
F_1 and F_2 – Applied forces; l_1 and l_2 – Length of the lever arms.

Lever equilibrium condition: *the system is in equilibrium if the sum of the moments of the acting forces is zero, that is, the sum of the moments of the forces rotating the lever clockwise (positive) is equal to the sum of the moments of the forces rotating the lever counterclockwise (negative)*:

$$F_1 \cdot l_1 - F_2 \cdot l_2 = 0 \text{ or } F_1 \cdot l_1 = F_2 \cdot l_2 ,$$

where l_1 and l_2 is length of the lever arms (Fig. 1.3.2.11).

Without taking into account friction, the following rules are more often used in technology (Fig. 1.3.2.12):

$$M_1 = M_2 , F_1 \cdot r_1 = F_2 \cdot r_2 .$$

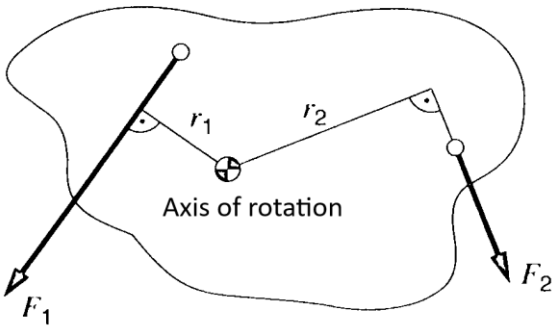

Figure 1.3.2.12 – Lever law:
F – Force; r – Radius.

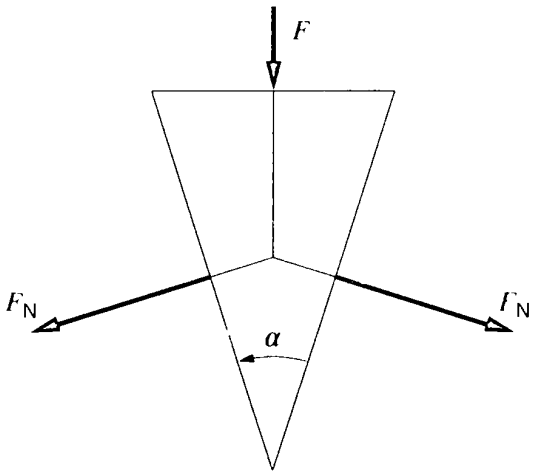

Figure 1.3.2.13 – Force on the wedge:
F – Force; F_N – Normal force; α – Angle.

The lever principle is found in many mechanisms, from simple pliers, wrenches, and screwdrivers to gear and belt drives, as well as the crank mechanism in piston engines.

Forces acting in a wedge joint. Depending on the wedge angle α, the action of a small force F on the wedge results in the formation of large normal forces (Fig. 1.3.2.13). Without taking friction into account, this is described by the expression:

$$F_N = \frac{F}{2\sin\frac{\alpha}{2}}.$$

1.3.2.3 Friction.

When contacting bodies move relative to each other, friction is generated, causing mechanical resistance acting in the direction opposite to the direction of motion υ (Fig. 1.3.2.14). The *resistance force*, known as the *frictional force* F_R, is proportional to the normal force F_N. *Static friction* exists as long as the external force is less than the frictional force, and the body remains at rest (motionless) ($F < F_R$). When static friction is overcome, the body begins to move, and the *sliding friction force* obeys the law (the general equation for friction):

$$F_R = \mu \cdot F_N.$$

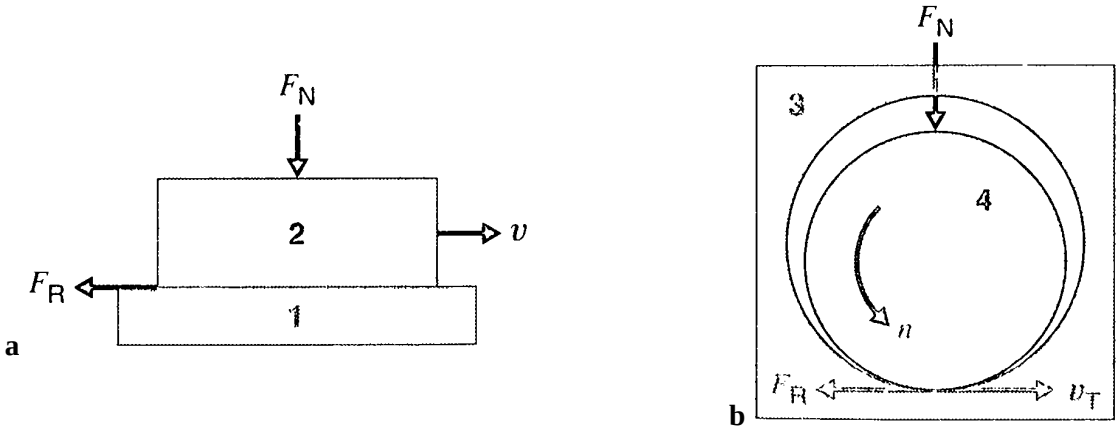

Figure 1.3.2.14 – Friction at (a) rectilinear motion, (b) rotary motion:
1 – Base; *2* – Sliding body; *3* – Bearing housing; *4* – Shaft; F_N – Normal force; F_R – Friction force; υ – Velocity; υ_T – Tangential velocity at the point of contact.

Wedge friction. The force applied to the wedge, taking into account friction (Fig. 1.3.2.15), is determined by the equation:

$$F = 2\left(F_N \cdot \sin\frac{\alpha}{2} + F_R \cdot \cos\frac{\alpha}{2}\right).$$

The normal force F_N is equal to:

$$F_N = \frac{F}{2\left(\sin\frac{\alpha}{2} + \mu \cdot \cos\frac{\alpha}{2}\right)}.$$

Belt-wrap friction. When the rope moves relative to the pulley, sliding friction occurs (Fig. 1.3.2.16), for example, a belt brake, a block. If the rope and the pulley are stationary relative to each other, *static friction* occurs (for example, a belt drive, a belt brake, a block at rest). Accordingly, the coefficient of sliding friction μ or the coefficient of static friction μ_H should be used.

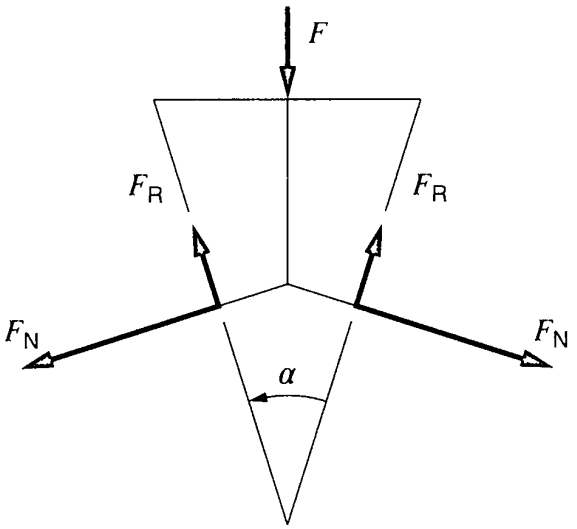

Figure 1.3.2.15 – Wedge friction: F_N – Normal force; F_R – Friction force; α – Wedge angle.

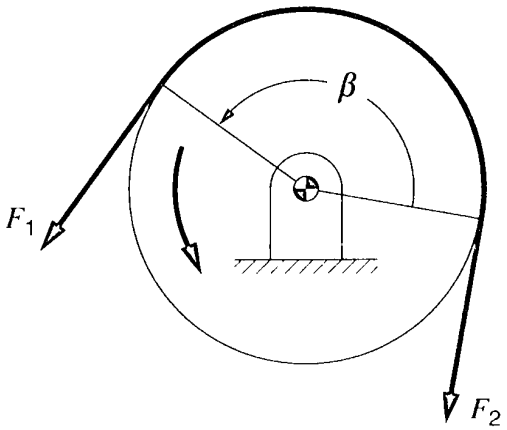

Figure 1.3.2.16 – Belt-wrap friction: F_1 – Force *1*; F_2 – Force *2*; β – Coverage angle.

The Eytelwein equation describes the transition from static friction to sliding friction:

$$F_2 = F_1 \cdot e^{\mu \cdot \beta},$$

where $e = 2.718$ (base of natural logarithms).

The friction force or transmittable peripheral force is equal to:

$$F_R = F_1 - F_2,$$

and the moment of friction forces is determined by the equation:

$$M_R = F_R \cdot r.$$

Coefficient of friction. The coefficient of friction μ always denotes a system property and not a material property. Coefficients of friction are among other things dependent on material pairing (see Table 1.3.2.3), temperature, surface condition, sliding speed, surrounding medium (e.g. water or CO_2, which can be adsorbed by the surface) or the intermediate material (e.g. lubricant). For this reason, the coefficient of friction always fluctuates within certain limits, and its exact determination is only possible experimentally.

The coefficient of static friction is often greater than that of sliding friction. In special cases, the friction coefficient can exceed 1 (e.g. with very smooth surfaces where cohesion forces are predominant or with racing tires featuring an adhesion or suction effect).

Table 1.3.2.3 – Reference values of the coefficient of static friction and coefficient sliding friction.

Materials	Coefficient of static friction μ_H		Coefficient sliding friction μ	
	Dry	Lubricated	Dry	Lubricated
Iron – iron	0.45…0.80	0.10	1.0	0.10
Copper – copper			0.60…1.0	
Steel – steel			0.40…0.70	

Chrome – chrome			0.41	
Nickel – nickel			0.39…0.70	
Aluminum alloy – aluminum alloy			0.15…0.60	
Steel – copper			0.23…0.29	
Steel – babbitt			0.21	
Steel – black cast iron	0.18…0.24	0.10	0.17…0.24	0.02…0.21
Brake pad – steel	0.60	0.20	0.50…0.60	0.20…0.50
Leather – metal			0.20…0.25	0.12
Polyamide – steel			0.32…0.45	0.10
Polytetrafluoroethylene – steel			0.04…0.22	–
Ice – steel	0.027	–	0.014	–

1.3.3 Oscillations and vibrations

Oscillations and *vibrations* are the terms used to denote changes in a physical quantity which repeat at more or less regular time intervals and whose direction changes with similar regularity.

1.3.3.1 Oscillations.

Oscillations are movements or processes that are characterized by a certain repetition in time. *Free* (*natural*) *oscillations* are called those that occur in the absence of external influences on the oscillating system and arise at any initial deviation of this system from its stable equilibrium state. *Periodic oscillations* are those that repeat at equal intervals of time.

The simplest example of oscillatory motion is the oscillation of a *mathematical pendulum*, a *spring pendulum*, and some mechanical and electrical systems (Fig. 1.3.3.1).

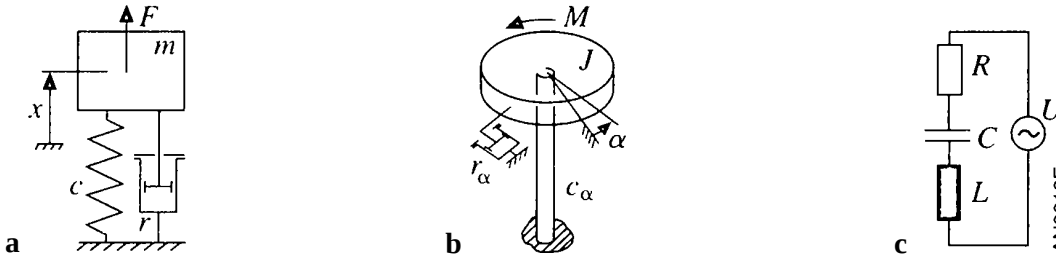

Figure 1.3.3.1 – Simple oscillatory systems:
Mechanical (a) Translational and (b) Rotational; (c) Electrical.

If a spring pendulum (Fig. 1.3.3.1a) is stretched by a distance of x (in the equilibrium position $x = 0$), applying a force F to the material point, then an elastic force F_E will arise, the magnitude of which is directly proportional to the displacement of the particle from the equilibrium position, and the direction is opposite to the displacement:

$$F_E = -k \cdot x,$$

where k is the spring constant. In this position, the acting force F is balanced by the elastic force F_E ($F = F_E$):

$$m \cdot a = -k \cdot x,$$

$$m \cdot \frac{d\upsilon}{dt} = -k \cdot x \text{ or } m \cdot \frac{d^2x}{dt^2} = -k \cdot x,$$

$$m \cdot \frac{d^2x}{dt^2} + k \cdot x = 0 \text{ or } m \cdot \ddot{x} + k \cdot x = 0.$$

The general solution of a second-order linear differential equation is known:

$$x = A \cdot \sin(\omega \cdot t + \varphi_0), \qquad (1.3.3.1)$$

where A, ω, φ_0 are constants, and $\omega = \sqrt{\frac{k}{m}}$.

Oscillations in which a physical quantity changes over time according to a sinusoidal (or cosine) law (Fig. 1.3.3.2) are called *harmonic oscillations*.

Main characteristics of harmonic oscillation. Eq. 1.3.3.1 describes harmonic oscillations and includes the following characteristics:

Amplitude A (from Latin ***A**mplitudo*) is the maximum instantaneous value (peak value) of a sinusoidally oscillating physical quantity;

$\omega \cdot t + \varphi_0$ – *Phase of oscillations* at time t;

ω – *Angular frequency*;

φ_0 – *Initial phase* (the value of the oscillation phase at time $t = 0$).

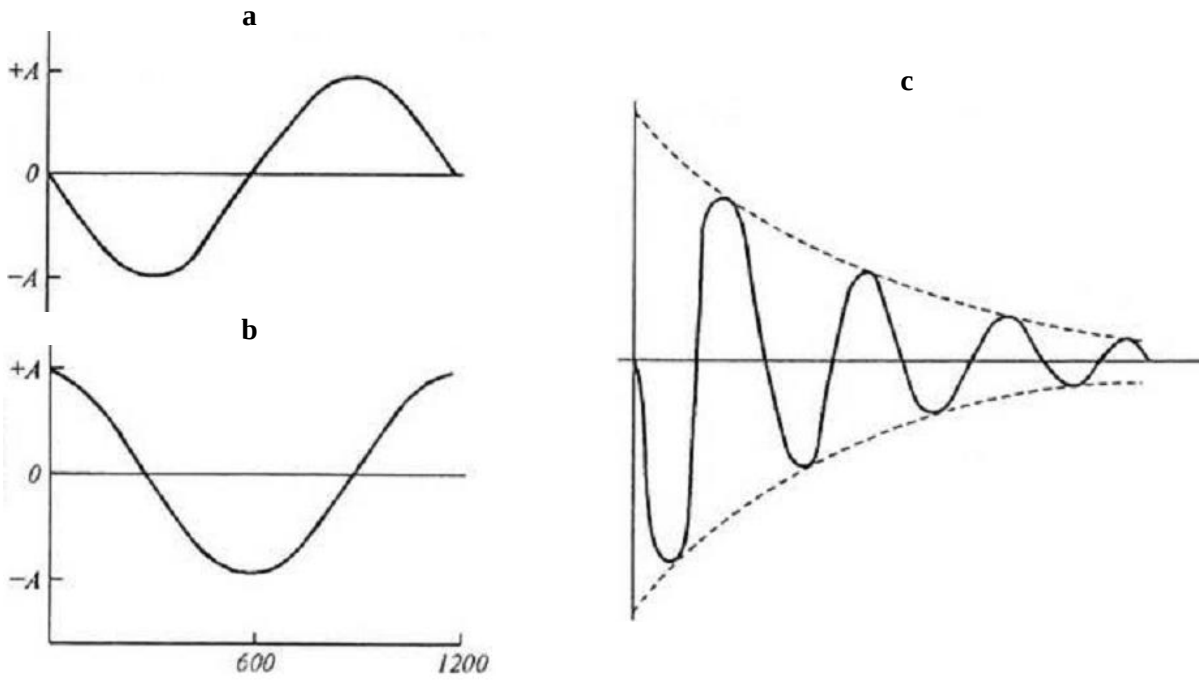

Figure 1.3.3.2 – Harmonic oscillation $x = f(t)$:
(a) – Undamped oscillation, sinusoidal; (b) – Undamped oscillation, cosine; (c) – Damped harmonic oscillation.

The *period of oscillation* T (from Latin ***T**empus*) is the time taken for one complete cycle of a single oscillation (period). The period T is related to the angular frequency ω by equation:

$$T = \frac{2\pi}{\omega}. \qquad (1.3.3.2)$$

Frequency f (from Latin ***f**requentia*) is the number of oscillations in one second, the reciprocal value of the period of oscillation T:

$$T = \frac{1}{f}. \qquad (1.3.3.3)$$

The unit of measurement of frequency [f] – Hz (hertz). A frequency of 1 Hz corresponds to such an oscillatory motion when one complete oscillation occurs in 1 s.

Angular frequency ω is 2π -times the frequency. Based on Eqs. 1.3.3.2 and 1.3.3.3:

$$\omega = 2\pi \cdot f .$$

Energy of mechanical harmonic oscillations. The motion of a material point (particle) that performs harmonic oscillations along the x -axis is described by the Eq. 1.3.3.1. Then the *particle velocity* υ (the instantaneous value of the alternating velocity υ of a vibrating particle in its direction of vibration) and the *particle acceleration* (oscillation acceleration) a of the oscillating particle are defined as:

$$\upsilon = \frac{dx}{dt} = A \cdot \omega \cdot \cos(\omega \cdot t + \varphi_0) = \upsilon_{\max} \cdot \cos(\omega \cdot t + \varphi_0), \qquad (1.3.3.4)$$

$$a = \frac{d\upsilon}{dt} = \frac{d^2x}{dt^2} = -A \cdot \omega^2 \cdot \sin(\omega \cdot t + \varphi_0) = -a_{\max} \cdot \sin(\omega \cdot t + \varphi_0), \qquad (1.3.3.5)$$

where $A \cdot \omega = \upsilon_{\max}$ and $A \cdot \omega^2 = a_{\max}$ are the maximum values of velocity and acceleration, respectively.

The oscillation process is accompanied by the transition of energy from potential to kinetic and vice versa. Taking into account the Eq. 1.3.3.4 for kinetic energy and $k = m \cdot \omega^2$ (with $\omega = \sqrt{\frac{k}{m}}$), and the formula Eq. 1.3.3.1 for the potential energy of the particle, we obtain:

$$E_k = \frac{m \cdot \upsilon^2}{2} = \frac{m}{2} \cdot [A \cdot \omega \cdot \cos(\omega \cdot t + \varphi_0)]^2 = \frac{m \cdot A^2 \cdot \omega^2}{2} \cdot \cos^2(\omega \cdot t + \varphi_0); \qquad (1.3.3.6)$$

$$E_p = \frac{k \cdot x^2}{2} = \frac{1}{2} \cdot m \cdot \omega^2 \cdot [A \cdot \sin(\omega \cdot t + \varphi_0)]^2 = \frac{m \cdot A^2 \cdot \omega^2}{2} \cdot \sin^2(\omega \cdot t + \varphi_0). \qquad (1.3.3.7)$$

Summing Eqs. 1.3.3.6 and 1.3.3.7 allows us to obtain an expression for the *total energy of mechanical vibrations*:

$$E = E_k + E_p = \frac{m \cdot A^2 \cdot \omega^2}{2} \cdot [\cos^2(\omega \cdot t + \varphi_0) + \sin^2(\omega \cdot t + \varphi_0)] = \frac{m \cdot A^2 \cdot \omega^2}{2} = \frac{k \cdot A^2}{2}.$$

Consequently, the total mechanical energy of undamped oscillations is constant and equal to the maximum value of potential or kinetic energy.

Beats occur when two sinusoidal (or cosine) oscillations, whose frequencies do not differ greatly, are superposed. They are periodic. Their basic frequency is the difference between the frequencies of the

superposed sinusoidal oscillations. Beats are used in tuning musical instruments, measuring vibration frequencies using a calibrated generator, etc.

When two oscillations with equations:

$$y_1 = y_0 \cdot \cos(2\pi \cdot f_1 \cdot t) \text{ and } y_2 = y_0 \cdot \cos(2\pi \cdot f_2 \cdot t)$$

are superimposed, the resulting oscillation is described by the equation:

$$y = y_1 + y_2 = y_0 \cdot [\cos(2\pi \cdot f_1 \cdot t) + \cos(2\pi \cdot f_2 \cdot t)].$$

Using the trigonometric ratio

$$\cos\alpha + \cos\beta = 2\cos\left(\frac{\alpha - \beta}{2}\right) \cdot \cos\left(\frac{\alpha + \beta}{2}\right),$$

we obtain:

$$y = 2y_0 \cdot \cos\left[2\pi \cdot \left(\frac{f_1 - f_2}{2}\right) \cdot t\right] \cdot \cos\left[2\pi \cdot \left(\frac{f_1 + f_2}{2}\right) \cdot t\right].$$

Figure 1.3.3.3 shows a graph of the resulting oscillation.

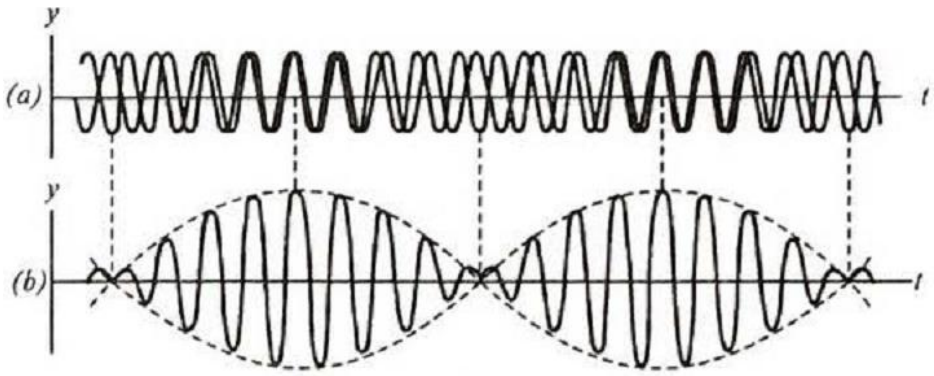

Figure 1.3.3.3 – Beats.

Thus, the effective frequency of the resulting oscillation is $\frac{f_1 + f_2}{2}$; the maximum amplitude of the resulting oscillations occurs at $\cos\left[2\pi \cdot \left(\frac{f_1 - f_2}{2}\right) \cdot t\right] = \pm 1$, i.e. the amplitude of the resulting oscillations changes with frequency $\frac{f_1 - f_2}{2}$.

Damping oscillations (Damping). Oscillations whose amplitude decreases over time due to loss of energy are called *damped oscillations*. *Damping* is a measure of the energy losses in an oscillatory system when one form of energy is converted into another (Fig. 1.3.3.2c and 1.3.3.4).

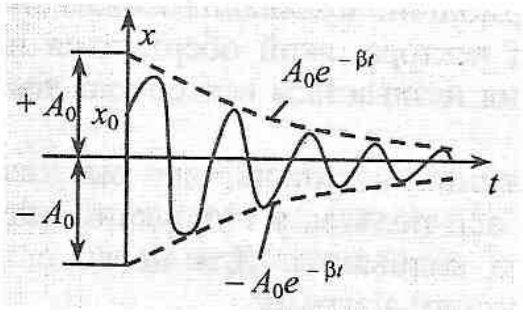

Figure 1.3.3.4 – Free oscillation and damping $x = f(t)$:
A_0 – Initial amplitude;
β – Damping coefficient.

The equation for damped oscillations is:

$$x = A_0 \cdot e^{-\beta \cdot t} \cdot \sin(\omega \cdot t + \varphi_0),$$

where A_0 is the amplitude of oscillations at the initial time $t = 0$, β is the damping coefficient. The amplitude of oscillations $A = A_0 \cdot e^{-\beta \cdot t}$ decreases exponentially with time (Fig. 1.3.3.4).

Decrement of damping D (from Latin ***D****ecrementum*) is a measure of the degree of damping; the relationship between two extreme values of a natural oscillation which are separated by one period T:

$$D = \frac{A_i}{A_{i+1}} = e^{\beta \cdot T}.$$

Natural logarithm of the this relationship is *Logarithmic decrement* λ:

$$\lambda = \beta \cdot T.$$

The value Q (from English *Quality factor*, German *Qualität faktor*), the inverse of the logarithmic decrement, is called the *quality factor* (*Q-factor*) or *resonance sharpness of the oscillatory system*:

$$Q = \frac{\pi}{\beta \cdot T}.$$

For a mechanical oscillatory system, the Q-factor shows how many times the elastic force is greater than the friction force.

Forced oscillations. *Forced oscillations* arise under the influence of an external physical force (excitation), which does not change the properties of the oscillator. The frequency of forced oscillations is determined by the frequency of the excitation. In order for the system to perform undamped oscillations, it is necessary to act on it with a force F_b that changes periodically according to the law:

$$F_b = F_0 \cdot \sin(\omega_b \cdot t),$$

where F_0 is the amplitude value of the force; ω_b is the angular frequency of forced oscillations; t is time.

The equation of motion of a body oscillating without any resistance has the form:

$$F + F_b = m \cdot a,$$

where F is the reverse force.

Given that $F = -m \cdot \omega^2 \cdot x$ ($a = \frac{\upsilon^2}{x}$, $\omega = \upsilon \cdot x$), we get:

$$-m \cdot \omega^2 \cdot x + F_0 \cdot \sin(\omega_b \cdot t) = -m \cdot \omega_b^2 \cdot x .$$

The solution to this equation is:

$$x = \frac{F_0 \cdot \sin \omega_b t}{m \cdot (\omega^2 - \omega_b^2)} = B \sin \omega_b t .$$

It can be seen that the amplitude of the forced oscillation

$$B = \frac{F_0}{m \cdot (\omega^2 - \omega_b^2)}$$

depends on the frequencies ω and ω_b. *Resonant frequency* is the exciter frequency $\omega = \omega_b$ at which the oscillator variable attains its maximum value B. *Resonance* occurs when the transfer function produces very large values as the *exciter frequency* ω_b approaches the *natural frequency* ω.

1.3.3.2 Wave.

Spatial and temporal change of state of a continuum, which can be expressed as a unidirectional transfer of location of a certain state over a period of time. There are transversal waves (e.g. waves in rope and water) and longitudinal waves (e.g. sound waves in air).

Traveling wave. A *traveling wave* can be defined as a disturbance moving in space with energy transfer. Consider a traveling wave, sinusoidal in shape, propagating starting from time $t = 0$ with a velocity υ along Ox-axis (Fig.. 1.3.3.5). The equation of such a wave is:

$$y = y_0 \cdot \sin\left(\omega \cdot t - \frac{x}{\upsilon} \cdot \omega\right) = y_0 \cdot \sin \omega\left(t - \frac{x}{\upsilon}\right). \qquad (1.3.3.8)$$

where y_0 is (amplitude) the magnitude of the displacement from the equilibrium position due to the oscillatory motion caused by the wave that reached point x at time t; ω is the frequency of oscillations.

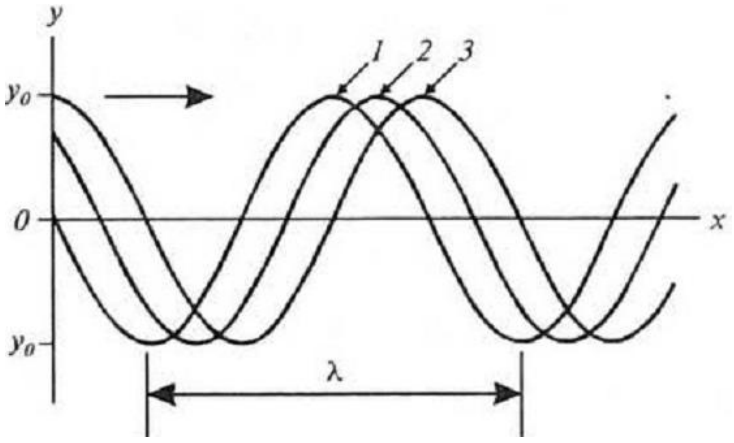

Figure 1.3.3.5 – Traveling wave:
υ – Velocity of propagation of a traveling wave; λ – Wavelength; *1, 2, 3* – successive movements of the wave.

The distance between two nearest points oscillating in the same phase is called the *wavelength* λ:

$$\lambda = \upsilon \cdot T = \frac{\upsilon}{f},\ f = \frac{\upsilon}{\lambda}, \qquad (1.3.3.9)$$

where T is oscillation period and linear frequency $f = \frac{1}{T}$.

Wavelength can also be defined as the path traveled by a wave during its oscillation period [Eq. 1.3.3.9] (Fig. 1.3.3.5). Given Eq. 1.3.3.9, we write Eq. 1.3.3.8 in other common forms:

$$\begin{aligned} y &= y_0 \cdot \sin\left(2\pi \cdot f \cdot t - \frac{2\pi}{\lambda} \cdot x\right) = \\ &= y_0 \cdot \sin\left[2\pi \cdot \left(\frac{t}{T} - \frac{x}{\lambda}\right)\right] = \\ &= y_0 \cdot \sin(\omega \cdot t - k \cdot x), \end{aligned}$$

where $\frac{2\pi}{\lambda} = \frac{\omega}{\upsilon} = k$ is *wave number*.

Standing waves. *Standing waves* occur as a result of interference between two waves of equal frequency, wavelength and amplitude traveling in opposite directions. If the equation of a traveling wave incident on a surface is:

$$y_1 = y_0 \cdot \sin\left[2\pi \cdot \left(\frac{t}{T} - \frac{x}{\lambda}\right)\right],$$

then the equation of a traveling wave reflected from the surface is:

$$y_2 = y_0 \cdot \sin\left[2\pi \cdot \left(\frac{t}{T} + \frac{x}{\lambda}\right)\right].$$

Standing waves occur by reflection of a wave back on itself if the characteristic impedance of the medium differs greatly from the impedance of the reflector. A result of interference between two waves:

$$y = y_1 + y_2 = 2y_0 \cdot \sin\frac{2\pi \cdot t}{T} \cdot \cos\frac{2\pi \cdot x}{\lambda}.$$

In contrast to a propagating wave, the amplitude of the standing wave is constant at every point; *nodes* (*zero amplitude*) and *Antinodes* (*maximum amplitude*) occur. The distance between adjacent nodes (or antinodes) is equal to half the wavelength (Fig. 1.3.3.6).

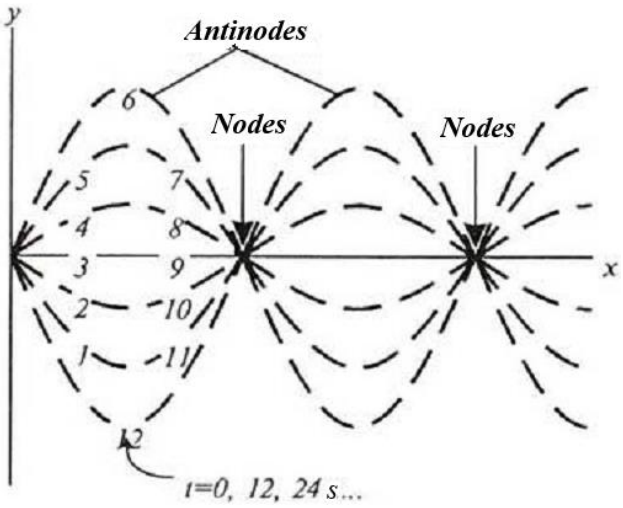

Figure 1.3.3.6 – Standing waves (the numbers indicate the successive moments of time through which the oscillating particle passes).

If $\cos\frac{2\pi \cdot x}{\lambda} = \pm 1$, the displacement is maximum ($y = 2y_0$); the value x in this case corresponds to antinomies; if $\cos\frac{2\pi \cdot x}{\lambda} = 0$, then $y = 0$ and the value x corresponds to a node.

1.3.3.3 Vibration reduction.

Vibration damping. If damping can only be carried out between the machine and a quiescent point, the damping must be at a high level.

Vibration isolation. *Vibration isolation* is a method of protecting a specific device from vibration, which is carried out using devices located between the vibration source and the object. Such protection is provided by introducing an additional elastic connection into the vibration system in order to weaken the transmission of vibration to an adjacent structural element or workplace. Numerically, vibration isolation is estimated by the attenuation of vibrations between the receiving point and the vibration source. The unit of measurement is 1 dB (decibel). Vibration isolator (Fig. 1.3.3.7) is a device that provides vibration isolation by reflecting or absorbing the energy of vibrations that propagate from mechanisms during their operation. The design of vibration isolators often uses a rubber shell reinforced with a spring.

a



b



Figure 1.3.3.7 – (a) Vibration isolators used in mechanical engineering. (b) Silent block of the front suspension of the car.

Shock absorbers. *Shock absorbers* are designed to convert the kinetic energy of movement or vibrations of machine parts, such as car wheels, into the thermal energy of friction surfaces in friction shock absorbers, or into the working fluid in hydraulic and other shock absorbers. The following main types of shock absorbers are distinguished:

1.) *spring*, in which the energy of movement is absorbed due to the deformation of the springs; they are used in cars, motorcycles, tractors, wagons, locomotives, etc.

2.) *rubber*, which work mainly on compression or shear. The low initial stiffness of the rubber provides cushioning even for weak shocks.

3.) *pneumatic* shock absorbers of single or double action, in which the kinetic energy of movement is converted into thermal energy by heating the air compressed in the cylinder. They are used in telescopic forks of motorcycles, in the chassis of light aircraft, etc.

4.) *frictional* in the form of wedge shock absorbers of single or double action, as well as in the form of double-acting springs. In them, kinetic energy is converted into heat, which is released on the friction surfaces. Such shock absorbers are used in parallelogram forks of the front wheels of motorcycles, partly in the suspensions of racing cars, in carriages of wagons, etc.

5.) *hydraulic* shock absorbers of single and double action, in which the energy of movement is converted into thermal energy of heating the working fluid, which is driven by the piston through the throttle valve. They are used in the suspensions of modern transport vehicles, in the bogies of passenger cars of fast trains, etc.

6.) *hydropneumatic* shock absorbers, in which kinetic energy is converted into thermal energy of the working fluid and compressed air. Widely used in telescopic forks of motorcycles, in truck suspensions, aircraft chassis struts, suspensions of trams and railway cars, etc.

A modern shock absorber is a complex mechanism that dampens vibrations, absorbs shocks and ensures constant contact of the wheels with the road surface when the car is moving. It is installed next to the wheel. Using a lever, mechanical loads (shocks and vibrations) are transmitted from the rotating wheel to the shock absorber.

This mechanism is equipped with a spring that ensures the rod returns quickly after compression when hitting a bump. If this process does not occur quickly, the car will become uncontrollable on off-road.

Most shock absorbers (Fig. 1.3.3.8) consist of a hollow steel tube (cylinder), plugged on one side (an eyelet is welded to this part, which allows you to fix the strut to the wheel hub). The reservoir is filled with a liquid (a mixture of gas and liquid or only gas), which provides load compensation when the piston is compressed. A rod seal is installed on the open side, which prevents fluid from leaking out of the cavity.

The *shock absorber rod* is a steel rod, the cross-section of which depends on the model of the mechanism. It is located in a reservoir. On one side, the rod is attached to the support bearing, and on the other side, a piston is attached to it, placed inside the cylinder.

The *piston* moves inside the cylinder, creating pressure on the liquid or gas inside the tube.



Figure 1.3.3.8 – Types of shock absorbers.

The *bypass valve* is installed on the piston and has several holes with elastic valves. When the piston moves, a certain group of valves is activated, which ensures the flow from the cavity under the piston to the part above it. The smoothness of the stroke is ensured by the resistance of the fluid movement through the system of small holes (the fluid does not have time to move quickly between the cavities). A similar process occurs during the recoil stroke (when the piston rises), only in this case the valves of another group are activated.

1.3.4 Hydromechanics

1.3.4.1 Density and pressure.

Although fluids are compressible to a very small limits, in many cases they can be considered incompressible. A fluid is said to be *incompressible* if its density ρ is constant. In addition, since the density of a fluid depends weakly on temperature, its value can be considered constant in many calculations.

Pressure p (from Latin ***p**ressio*) is a scalar quantity measured by the ratio of the sum of forces F acting perpendicularly on any part of a surface to the area S (or A (from English ***A**rea*)) of that part:

$$p = \frac{F}{S} \text{ or } p = \frac{F}{A}.$$

Unit of measurement of pressure [p] – Pa = N · m^{-2} or N/m^2 (pascal).

Pressure p is the same in all directions in a fluid at rest. If the part of the pressure due to the fluid's own weight (*geodetic pressure*) can be neglected, then *hydrostatic pressure* is considered to be the same throughout the volume of the fluid (e.g., in a *hydrostatic press*).

Fluid at rest in an open container. The pressure of a fluid contained in an open container depends only on the *depth of fluid* h (Fig. 1.3.4.1). Closed containers such as fuel tanks and hydraulic brake actuators equipped with pressure compensation devices can also be considered as open containers.

Fluid pressure: $p(h) = \rho \cdot g \cdot h$

Force acting on bottom: $F_B = A_B \cdot \rho \cdot g \cdot h$

Force acting on sides: $F_S = 0.5 A_S \cdot \rho \cdot g \cdot h$,

where g – Acceleration of free fall (= 9.81 m/s^2); A_B – Area of base; A_S – Area of side.

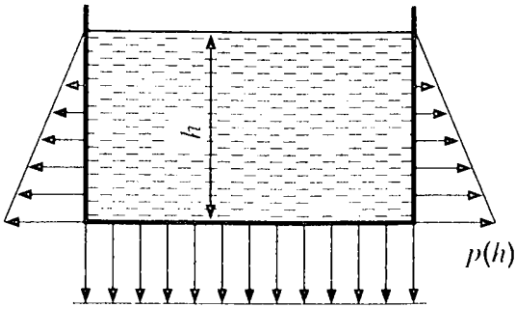

Figure 1.3.4.1 – Pressure distribution in a fluid at rest:
p – Fluid pressure; h – Depth of fluid.

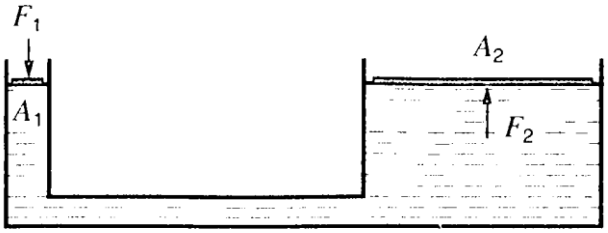

Figure 1.3.4.2 – Hydrostatic press:
F – Force; A – Cross-sectional area.

Hydrostatic press. The principle of a hydrostatic press (Fig. 1.3.4.2) is used to create gain, for example, in a car's hydraulic brake system or a hydraulic power steering system.

Fluid pressure: $p = \frac{F_1}{A_1} = \frac{F_2}{A_2}$

Piston forces: $F_1 = p \cdot A_1 = F_2 \cdot \frac{A_1}{A_2}$

$F_2 = p \cdot A_2 = F_1 \cdot \frac{A_2}{A_1}$.

1.3.4.2 Buoyancy.

Buoyancy or *upthrust* is the force F_A acting in the direction opposite to the force of gravity and towards the center of gravity of the displaced volume of fluid. This force is equal to weight of displaced volume of fluid:

$$F_A = m_F \cdot g = V_F \cdot \rho \cdot g,$$

where F_A is the buoyancy force (Archimedes' force); m_F is the displaced mass of fluid; V_F is the displaced volume of fluid.

A body will float if:

$$F_A \geq F_G,$$

where F_G is the weight.

Buoyancy allows you to easily and reliably measure the amount of fuel in the fuel tank using analog sensors (floats).

1.3.4.3 Basic principles of hydromechanics.

An *ideal fluid* is one that has no frictional forces (viscosity) and is incompressible. This means that there are no shear stresses and the pressure on the fluid element acts equally in all directions. However, in reality, if deformation occurs due to the shearing of the fluid elements, there must be a resistance that must be overcome. (Fig. 1.3.4.3).

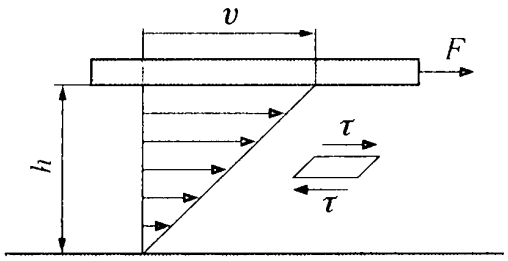

Figure 1.3.4.3 – Shear stress in a fluid:
τ – Shear stress;
υ – Flow velocity;
h – Height;
F – Force.

If a friction force (viscosity) arises in a fluid during its motion, then such a fluid is called *real fluid*.

Newtonian fluid equation (or Newton's Law of Viscosity): *shear stress* τ *is directly proportional to the velocity gradient* $\frac{\Delta \upsilon}{\Delta h}$ *(rate of shear deformation)*:

$$\tau \propto \frac{\Delta \upsilon}{\Delta h} \text{ or } F = \eta \cdot A \cdot \frac{\Delta \upsilon}{\Delta h}.$$

Thus, the resulting *shear stress* is determined by:

$$\tau = \frac{F}{A} = \eta \cdot \frac{\upsilon}{h},$$

where F is the force; A is the surface area; the proportionality coefficient η is the *dynamic viscosity*. It characterizes the resistance of a fluid to the displacement of its layers. Unit of measurement for dynamic viscosity [η] – Pa · s (pascalsecond).

In practice, *kinematic viscosity* is often used:

$$\nu = \frac{\eta}{\rho},$$

because it can be determined very easily using a capillary viscometer.

The flow of a viscous fluid can be *laminar flow* (if the layers of the fluid do not mix, moving parallel to each other) or *turbulent flow* (when the layers mix). The flow develops into turbulence at restrictions. The flow rate of the fluid is then largely independent of viscosity. On the other hand, viscosity does play a role in the case of laminar flow in narrow pipes and apertures.

The fluid flow regime is characterized by the *Reynolds number* Re, which is determined by equation:

$$\mathrm{Re} = \frac{\rho \cdot D \cdot \upsilon}{\eta} = \frac{D \cdot \upsilon}{\nu},$$

where η is the viscosity; ρ is the density; D is the diameter of the tube.

Fluid flow in a cylindrical pipe becomes unstable (or turbulent) when $\mathrm{Re} > 2300$.

Since compression is insignificant during the movement of a gas flow at low velocity (0.5 velocity of sound and below), such a flow is considered an incompressible fluid flow.

1.3.4.4 Basic equations of hydromechanics.

The most important equations in hydromechanics (fluid mechanics) are the *continuity equation* and *Bernoulli's equation*. These basic equations describe the laws of conservation of mass and energy in fluid flow.

Continuity equation. If the velocity of a fluid at each point in a volume does not change with time (fluid moving in a stable, non-turbulent manner), such fluid motion is called *steady flow*.

At steady state, the *mass flow rate*, according to the law of conservation of mass, must be the same at any cross-section A of the flow (Fig. 1.3.4.4):

$$m = \rho \cdot A_1 \cdot \upsilon_1 = \rho \cdot A_2 \cdot \upsilon_2 = \text{const}.$$

For incompressible fluids ($\rho = \text{const}$), the *volume flow rate* must also be constant:

$$Q = A_1 \cdot \upsilon_1 = A_2 \cdot \upsilon_2 = \text{const}.$$

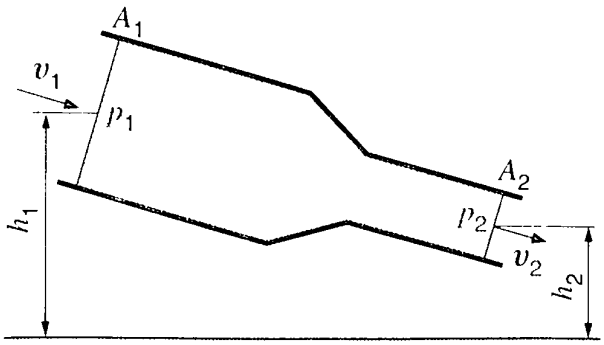

Figure 1.3.4.4 – Continuity equation and Bernoulli's equation:
A – Cross-sectional area;
h – Height;
p – Pressure;
υ – Flow velocity.

Fluid flow continuity equation: for a steady flow of fluid, the product of the fluid velocity and the cross-section of the flow tube is a constant quantity;

$$A \cdot \upsilon = \text{const}.$$

From this equation we can obtain:

$$\frac{\upsilon_1}{\upsilon_2} = \frac{A_2}{A_1} \text{ and } A = \frac{\text{const}}{\upsilon}.$$

Flow rate at flow with change in cross section:

$$Q = A_1 \cdot \upsilon_1 = A_2 \cdot \upsilon_2 = \sqrt{\frac{2}{\rho} \cdot \frac{p_1 - p_2}{\frac{1}{A_2^2} - \frac{1}{A_1^2}}}$$

Bernoulli's equation. From the continuity equation of flow it follows that there is an acceleration between A_1 and A_2. As a result, the kinetic energy increases, which is accompanied by a pressure drop $p_1 > p_2$ (Fig. 1.3.4.4). *Bernoulli's principle* can be derived from the principle of conservation of energy. This states that, in a steady flow, the sum of all forms of energy in a fluid is the same at all points that are free of viscous forces. The fluid flow in an inclined pipe is described as:

$$p_1 + \rho \cdot g \cdot h_1 + \frac{1}{2} \cdot \rho \cdot \upsilon_1^2 = p_2 + \rho \cdot g \cdot h_2 + \frac{1}{2} \cdot \rho \cdot \upsilon_2^2.$$

Bernoulli's equation: *in a steady flow, the total pressure, consisting of static, hydrostatic, and dynamic pressures, is a constant value for any cross-section of the flow*:

$$p + \rho \cdot g \cdot h + \frac{\rho \cdot \upsilon^2}{2} = \text{const},$$

where p is the *static pressure* at the chosen point, it's the pressure you'd measure in a fluid that's not flowing, or the pressure a fluid exerts perpendicular to a surface; $\rho \cdot g \cdot h$ is the *hydrostatic pressure* exerted by a fluid at rest due to the force of gravity, it increases with depth within the fluid; ρ is the density of the fluid at all points in the fluid (fluid density); h is the elevation of the point above a reference plane, with the positive h-direction pointing upward – so in the direction opposite to the gravitational acceleration g; $\frac{\rho \cdot \upsilon^2}{2}$ is the *dynamic pressure* (sometimes called *velocity pressure*) resulting from the movement of a fluid; υ is the flow speed.

For a fluid flowing horizontally Bernoulli's principle states that an increase in the speed occurs simultaneously with a decrease in pressure:

$$p + \frac{\rho \cdot \upsilon^2}{2} = \text{const}.$$

Thus, the total energy per unit volume of an ideal fluid in any cross-section of the flow is a constant quantity.

1.3.4.5 Discharge from vessels.

If the previous condition is met that the cross-section of the outlet is much smaller than the dimensions of the tank (Fig. 1.3.4.5), then according to the continuity equation, the velocity υ_1 is very small. According to Bernoulli's equation, the *discharge velocity* is equal to:

$$\upsilon_2 = \varphi \cdot \sqrt{\frac{2}{\rho} \cdot (p_1 - p_2) + 2g \cdot h},$$

where $p_1 - p_2$ is the *differential pressure* (or is *gauge pressure compared with atmospheric pressure*).

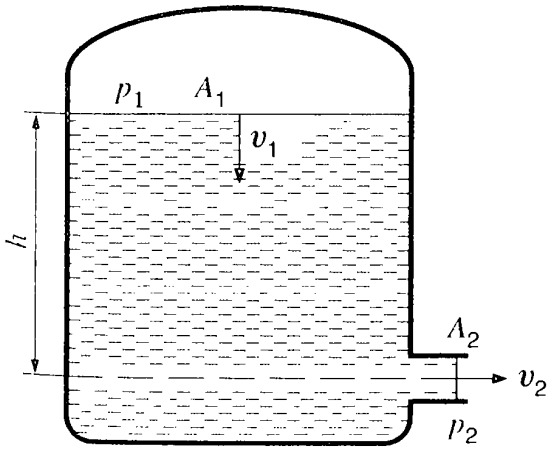

Figure 1.3.4.5 – Discharge from vessels:
A – Cross-sectional area;
h – Height (Depth);
p – Pressure;
υ – Flow velocity.

The *discharge coefficient* φ takes into account losses. In addition, when determining the volume flow rate or discharge rate, the flow constraction must be taken into account; this constraction is determined by the *coefficient of contraction* α. The discharge rate, taking into account the coefficient of contraction, is equal to:

$$Q_2 = \alpha \cdot A \cdot \upsilon_2 = \\ = \alpha \cdot A \cdot \varphi \cdot \sqrt{\frac{2}{\rho} \cdot (p_1 - p_2) + 2g \cdot h}.$$

The discharge coefficient and the coefficient of contraction are often expressed in terms of the *coefficient of velocity* $\mu = \alpha \cdot \varphi$ (Table 1.3.4.1).

Table 1.3.4.1 – Discharge ports.

Discharge port	Discharge coefficient φ	Coefficient of contraction α	Coefficient of velocity μ
With sharp edge 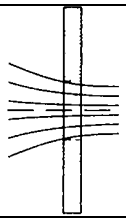	0.97	0.61…0.64	0.59…0.62

For slightly broken edge	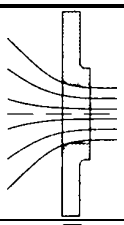	0.97…0,99	0.7...0.8			0.68…0.79
For slightly and for heavily rounded, smooth edge	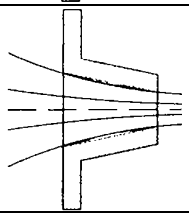	0.95…0.97	$(d_2/d_1)^2$			0.82…0.97
			0.4	0.6	0.8	1.0
			0.87	0.90	0.94	1.0

1.3.4.6 Drag of bodies.

In fluid dynamics, *drag*, sometimes referred to as *fluid resistance*, is a force acting opposite to the direction of motion of any object moving with respect to a surrounding fluid. The *drag force* of a body (for example, a car body) immersed in a fluid flow is equal to:

$$F_W = \frac{1}{2} \cdot c_W \cdot A \cdot \rho \cdot \upsilon^2,$$

where A is the cross-sectional area of the body affected by the fluid flow; c_W is the *drag coefficients*, which depends on the shape of the body in the fluid flow.

The value of c_W is not a constant but varies as a function of flow speed, flow direction, object position, object size, fluid density and fluid viscosity. Speed, kinematic viscosity and a characteristic length scale of the object are incorporated into a dimensionless quantity called the Reynolds number Re. c_W is thus a function of Re.

The results of flow measurements on two geometrically similar bodies of different sizes are comparable only if the Reynolds number is of equal magnitude in both cases (this is important in tests on models given in Table 1.3.4.2).

Table 1.3.4.2 – Drag coefficients c_W.

Body shape: L – Length of body in m (in direction of flow); t – Thickness of body in m; Re – Reynolds number		c_W
Disc, plate	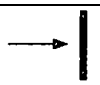	1.11
Open dish, parachute	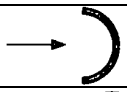	1.33
Sphere	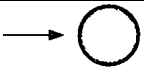 $R_e < 200000$ $R_e > 250000$	0.47 0.20
Slender rotating body	$L/t = 6$ 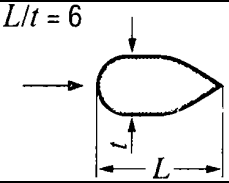	0.05
Long cylinder	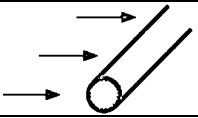 $R_e < 200000$ $R_e > 450000$	1.0 0.35

Long plate	$L/t = 30$	
	$R_e \approx 500000$ $R_e \approx 200000$	0.78 0.66
	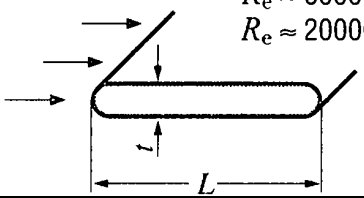	
Long airfoil	$L/t = 18$ $R_e \approx 10^6$ $L/t = 8$ $R_e \approx 10^6$ $L/t = 5$ $R_e \approx 10^6$ $L/t = 2$ $R_e \approx 2 \cdot 10^5$	0.2 0.1 0.08 0.2
	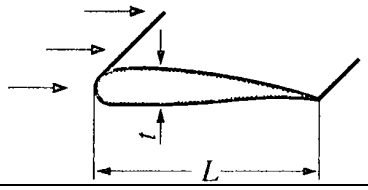	

1.3.5 Thermodynamics (Heat)

Temperature t and T (from Latin ***T****emperātūra*) is a physical quantity that characterizes the state of thermodynamic equilibrium of a macroscopic system. Quantitative measurement of temperature is possible thanks to the introduction of *temperature scales*. The *Celsius scale* (for *Celsius temperature* t) uses the melting point of ice as 0 °C and the boiling point of water at normal (1013.25 hPa = 760 mm Hg) pressure as 100 °C. *Thermodynamic scale* (*Kelvin scale*) (for *Thermodynamic temperature* T) uses triple point of water is the only point at which all three phases of water (solid, liquid and gaseous) are in equilibrium (at a pressure of 1013.25 hPa). This temperature of 273.16 K is 0.01 K above the freezing point of water (273.15 K). There is a relationship between the two scales:

$$t\ ^{\circ}C = T - 273.15 \text{ or } T = t + 273.15.$$

1.3.5.1 Enthalpy (heat content).

Enthalpy (*heat content*) H – the quantity of heat Q_i possessed by a solid, liquid or gaseous body with mass m and specific heat capacity c_p at a certain temperature T:

$$Q_i = c_p \cdot m \cdot T = c_p \cdot V \cdot \rho \cdot T,$$

where c_p is isobaric (constant pressure) specific heat capacity. Units of heat measurement [Q] is J (joule) and specific heat capacity [c] is J · kg^{-1} · K^{-1} or J/(kg · K).

Enthalpy difference ΔH is the quantity of heat released Q as a result of a change in temperature $\Delta T = T_1 - T_2$:

$$\Delta H = H_1 - H_2 = Q = c \cdot m \cdot \Delta T = c \cdot V \cdot \rho \cdot \Delta T.$$

Heat transfer. Heat is transferred in three different ways:

Thermal conduction: Heat is conveyed inside a solid, liquid or gaseous body by contact between the particles.

Convection: Heat is conveyed by the particles of a moving liquid or gaseous body. In natural or free convection, the state of motion is brought about by the effect of buoyancy; in forced convection, however, the motion is maintained artificially.

Radiation: Heat is transferred from one body to another by electromagnetic waves without a material carrier.

Thermal conduction. The *heat flow* in a body of constant cross section A (or S) between two parallel cross-sectional planes separated by a distance s $[= \Delta x = x_1 - x_2]$ at a temperature difference $\Delta T = T_1 - T_2$ $(T_1 > T_2)$ is:

$$\dot{Q} = \frac{\Delta Q}{\Delta t} = \frac{\lambda}{s} \cdot A \cdot \Delta T \, .$$

F o u r i e r ' s L a w : *the quantity of heat transferred by thermal conduction is directly proportional to the temperature gradient*:

$$\Delta Q = -\lambda \cdot A \cdot \frac{\Delta T}{\Delta x} \cdot \Delta t \, ,$$

where ΔQ is the quantity of heat transferred; λ is thermal conductivity coefficient (thermal conductivity) ($W \cdot m^{-1} \cdot K^{-1}$); A is the cross-sectional surface area; $\frac{\Delta T}{\Delta x}$ is the temperature gradient; Δt is the time interval.

Typical values of the thermal conductivity coefficient of various materials are given in Table 1.3.5.1.

Table 1.3.5.1 – Thermal conductivity λ of various materials.

Material	Thermal conductivity in $W \cdot m^{-1} \cdot K^{-1}$	Temperature in ^oC
	Metals	
Aluminum	238	25
Gold	314	25
Iron	80	25
Lead	35	25
Silver	427	25
	Gases	
Air (dry)	0,0237	–10
---	0,0243	0
---	0,0250	10
---	0,0257	20
---	0,0264	30
---	0,0270	40
---	0,0277	50
Helium	0,138	20
Hydrogen	0,172	20
Nitrogen	0,0234	20
Oxygen	0,0238	20
	Nonmetals	
Water	0,565	0
---	0,599	20
---	0,627	40
Concrete	2,43	20
Tree	0,126	20
Plastic	0,04	20

Thermal radiation. Empty space and air are pervious to thermal radiation. Solid bodies and most liquids are impervious to thermal radiation, as are various gases to certain wavelengths.

A *black-body radiator* completely absorbs all incident light and heat radiation directed against it; and therefore when heated radiates the maximum amount of light which can be emitted by a body. An example of a black-body radiator is the opening in a carbon tube. The following laws of thermal radiation of a black-body radiator are used:

P l a n c k ' s r a d i a t i o n L a w *gives the spectral dependence (dependence on wavelength* λ*) of the volume radiation density* ε *(radiation energy per unit volume) and the emissivity of a black body* $R = \frac{c}{4} \cdot \varepsilon$ *proportional to it (radiation energy emitted by a unit of its surface per unit time); the functions* $\varepsilon_{\lambda,T}$ *and* $R_{\lambda,T}$*, referred to the wavelength interval*:

$$\varepsilon_{\lambda,T} = \frac{4}{c} \cdot R_{\lambda,T} = \frac{8\pi \cdot h \cdot c}{\lambda^5} \cdot \frac{1}{e^{\frac{h \cdot c}{\lambda \cdot k \cdot T}} - 1},$$

where h (from German ***h**ilfsgröße*) is the Planck constant; λ is the wavelength; c (from Latin ***c**eleritas lucis*) is the speed of light; T is absolute temperature; k is the Boltzmann constant.

With increasing temperature, the total radiated energy of a body increases and the peak of the emitted spectrum $\lambda_{\max}$ shifts to shorter wavelengths.

W i e n ' s d i s p l a c e m e n t L a w : *the wavelength* $\lambda_{\max}$*, which accounts for the maximum energy in the equilibrium radiation spectrum, is inversely proportional to the absolute temperature* T *of the emitting body*:

$$\lambda_{\max} = \frac{2.897756 \cdot 10^{-3}}{T} \text{ in m.}$$

For frequency $\nu_{\max}$ is defined as: $\nu_{\max} = 1.03 \cdot 10^{11} \cdot T$ in Hz.

S t e f a n - B o l t z m a n n L a w : *the total energy radiated per unit surface area per unit time (also known as the radiant exitance)* R *is directly proportional to the fourth power of the black body's temperature*:

$$R = \sigma \cdot T^4,$$

where R is measured in W/m^2; σ is *Stefan-Boltzmann constant*, the *radiation constant of the black-body radiator* [= 5.67051 · 10^{-8} W · m^{-2} · K^{-4} or W/(m^2 · K^4)].

The thermal radiation emitted by the area A at temperature T is:

$$\dot{Q} = \frac{\Delta Q}{\Delta t} = \varepsilon \cdot \sigma \cdot A \cdot T^4,$$

where ε is the emissivity of the surface area (see Table 1.3.5.2).

Transmission of heat through a wall. The heat flow through a wall of area A and thickness s at a temperature difference ΔT is:

$$\dot{Q} = \frac{\Delta Q}{\Delta t} = k \cdot A \cdot \Delta T.$$

The heat transmission coefficient k (see Table 1.3.5.3) is calculated as follows:

$$\frac{1}{k}=\frac{1}{\alpha_i}+\frac{1}{\lambda}+\frac{1}{\alpha_a}.$$

Table 1.3.5.2 – Emissivity ε up to a temperature of 300 °C (573 K).

Black-body radiator	1.00
Aluminum, unmachined	0.07
Aluminum, polished	0.4
Ice	0.90
Enamel paint, white	0.91
Glass	0.93
Cast iron, rough, oxidized	0.94
Cast iron, turned	0.44
Wood, smooth	0.90
Lime mortar, rough, white	0.93
Copper, oxidized	0.64
Copper, polished	0.05
Brass, matt	0.22
Brass, polished	0.05
Nickel, polished	0.07
Oil	0.82
Paper	0.80
Porcelain, glazed	0.92
Soot	0.93
Silver, polished	0.02
Steel, matt, oxidized	0.96
Steel, polished, oil-free	0.06
Steel, polished, oiled	0.40
Water	0.92
Bricks	0.93
Zinc, matt	0.23
Zinc, polished	0.05
Tin, polished	0.06

Table 1.3.5.3 – Heat transfer coefficients α (convection + radiation).

Type of material, wall surface etc.	α_i or α_a in W/(m^2 · K)
Natural air movement in a closed room:	
Wall surfaces	8
Interior windows	8
Exterior windows	11
Floors, ceilings:	
from bottom upwards	8
from top downwards	6
Forced air movement on a flat wall:	
Mean wind velocity = 2 m/s	15
Mean wind velocity > 5 m/s	$6.4\cdot\upsilon^{0.75}$
Water on a flat wall:	
Still	500…2000
Moving	2000…4000
Boiling	2000…6000

Thermal resistance. Thermal resistance (see Table 1.3.5.4) is composed of the thermal resistance of the individual layers of the wall:

$$\frac{s}{\lambda} = \frac{s_1}{\lambda_1} + \frac{s_2}{\lambda_2} + \ldots.$$

Table 1.3.5.4 – Thermal resistance of air layers $\frac{s}{\lambda}$ (conduction + convection + radiation)

Position of air layer	Thickness of air layer in mm	Thermal resistance $\frac{s}{\lambda}$ in m^2 K/W
Vertical air layer	10	0.14
	20	0.16
	50	0.18
	100	0.17
	150	0.16
Horizontal air layer:		
Heat flow	10	0.14
from bottom	20	0.15
upwards	50	0.16
Horizontal air layer:		
Heat flow	10	0.15
from top	20	0.18
downwards	50	0.21

1.3.5.2 Laws of thermodynamics.

Quantity of heat (heat) and work. The exchange of energy between a closed thermodynamic system and external bodies can occur in two different ways: through *heat exchange* and by *performing work.*

The energy transferred to a thermodynamic system by external bodies through heat exchange is called *heat* Q, which the system receives from the external environment. The *quantity of heat* required to change the temperature of a body of mass m by a value of ΔT is defined as:

$$Q = c \cdot m \cdot \Delta T ,$$

where c is specific heat capacity.

The energy transferred to a system by external bodies is called *work* A (from German ***A**rbeit* or French ***A**ction*) or W (from the English ***W**ork*), which is performed on the system.

In a cylinder filled with gas and equipped with a piston, in equilibrium the gas exerts pressure p on the piston. During the movement over a distance dx, work is done:

$$dA = F \cdot dx = p \cdot S \cdot dx = p \cdot dV ,$$

where S is the piston surface area; F is the force with which the gas acts on the piston.

The total work done by the piston when changing the volume from V_1 to V_2 is equal to:

$$A = \int_{V_1}^{V_2} p \cdot dV . \qquad (1.3.5.1)$$

The work done by the gas during expansion from the initial to the final state is equal to the area under the curve in the p - V -coordinate system and depends on the process in which the system participates (see State diagrams, Table 1.3.5.5).

First Law of thermodynamics. Energy can be neither created nor destroyed. Only the form in which energy exists can be changed, e.g., heat can be transformed into mechanical energy. The first law of thermodynamics is a generalization of the law of conservation of energy and takes into account possible changes in internal energy.

Internal energy U (from Latin ***U**nio*) includes the energy of chaotic (thermal) motion of all microparticles of the system (molecules, atoms, ions) and the energy of interaction of these particles. Internal energy characterizes the state of a thermodynamic system, that is, it is a *function of the state of the system*.

The transition of a system from one state to another is accompanied by a *change* ΔU *in internal energy*:

$$\Delta U \propto c_V \cdot \Delta T ,$$

where c_V is isochoric (constant volume) specific heat capacity. The change ΔU in internal energy can be estimated by measuring the heat Q absorbed or released by the system and the work done A:

$$\Delta U = U_2 - U_1 = Q - A .$$

Here $A > 0$ is when work is done on the system, and $A < 0$ is when work is done by the system against external forces.

First Law of thermodynamics: *the heat supplied to the system is spent on changing the internal energy of the system and on performing work by the system against external forces*:

$$Q = \Delta U + A .$$

For infinitesimal changes of state, the first law of thermodynamics is written as:

$$dQ = dU + dA .$$

(In the literature, one can find such a form of writing the first law of thermodynamics as $dU = \delta Q \pm \delta A$, where the symbols δ mean that heat Q and work A are not functions of state and, therefore, cannot be total differentials).

A few special cases.

1. An *isolated system* does not interact with the environment; there is no heat flow ($Q = 0$), $A = 0$; therefore, $\Delta U = 0$, i.e. the internal energy of the isolated system remains constant ($U = \text{const}$).

2. A *thermodynamic cycle* consists of linked sequences of thermodynamic processes that involve transfer of heat and work into and out of the system, while varying pressure, temperature, and other state variables within the system, and that eventually returns the system to its initial state.

3. A *cyclic process* that starts from one state and ends in the same state is characterized by a change in internal energy $\Delta U = 0$, therefore, $Q = A$.

Heat engine. A *heat engine* is a system that transfers thermal energy to do mechanical or electrical work (into other forms of energy). A heat engine consists of the following main components:

1.) *working substance* (gas or liquid) generates work in the *working body* of the engine while transferring heat to the colder sink until it reaches a lower temperature state; some of the thermal energy is converted into work by exploiting the properties of the working substance;

2.) *heat source* generates thermal energy that brings the working substance to the higher temperature state;

3.) *cold sink* is a body or environment with a temperature lower than that of the working substance.

In the process of passing through a cycle, the working fluid (system) may convert heat from a warm source into useful work, and dispose of the remaining heat to a cold sink, thereby acting as a heat engine (see Fig. 1.3.5.1a). Conversely, the cycle may be reversed and use work to move heat from a cold source and transfer it to a warm sink thereby acting as a *heat pump* (see Fig. 1.3.5.1c). If at every point in the cycle the system is in thermodynamic equilibrium, the cycle is *reversible*.

The *thermal efficiency* η is a dimensionless performance measure of a device that uses thermal energy, such as an internal combustion engine, steam turbine, steam engine, refrigerator, ACs etc. For a heat engine, thermal efficiency is the ratio of the net work A output to the heat input Q_1; in the case of a heat pump, thermal efficiency (known as the *coefficient of performance* or *COP*) is the ratio of net heat output (for heating), or the net heat removed (for cooling) to the energy input (external work). The greatest efficiency in the conversion of heat to mechanical work is achieved in a reversible process. The following then applies for thermal efficiency (Carnot cycle):

$$\eta = \frac{A}{Q_1} = \frac{Q_1 - Q_2}{Q_1}, \eta = \frac{T_1 - T_2}{T_1},$$

where Q_2 is the *heat output* – the amount of heat that the working fluid transfers to the refrigerator ($Q_2 > 0$); T_1 is the temperature at which the heat enters the engine, and T_2 is the temperature of the environment into which the engine.

The maximum work to be gained here is:

$$A = Q_1 \cdot \frac{T_1 - T_2}{T_1}$$

A typical gasoline automobile engine operates at around 25 % efficiency, diesel engine – 35...40 %, and highly efficient power units (in Formula 1 motorsport) which peak around 45...50 % thermal efficiency.

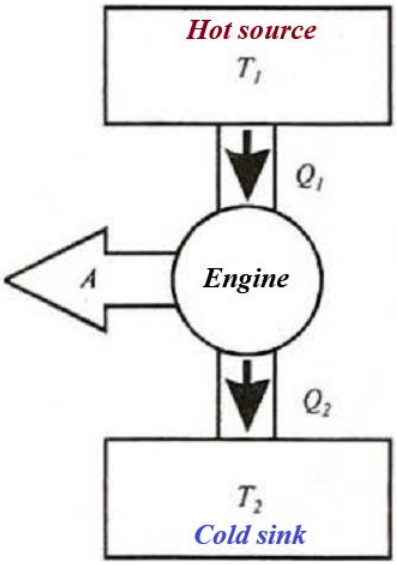

a

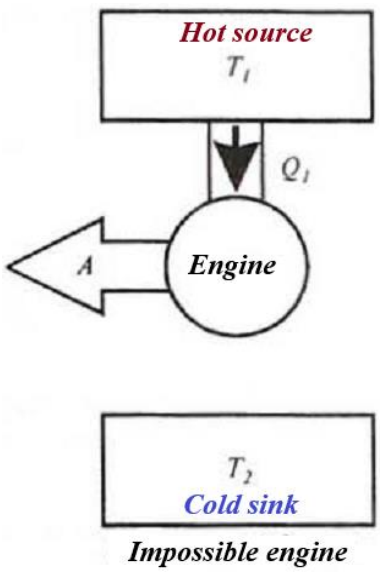

b

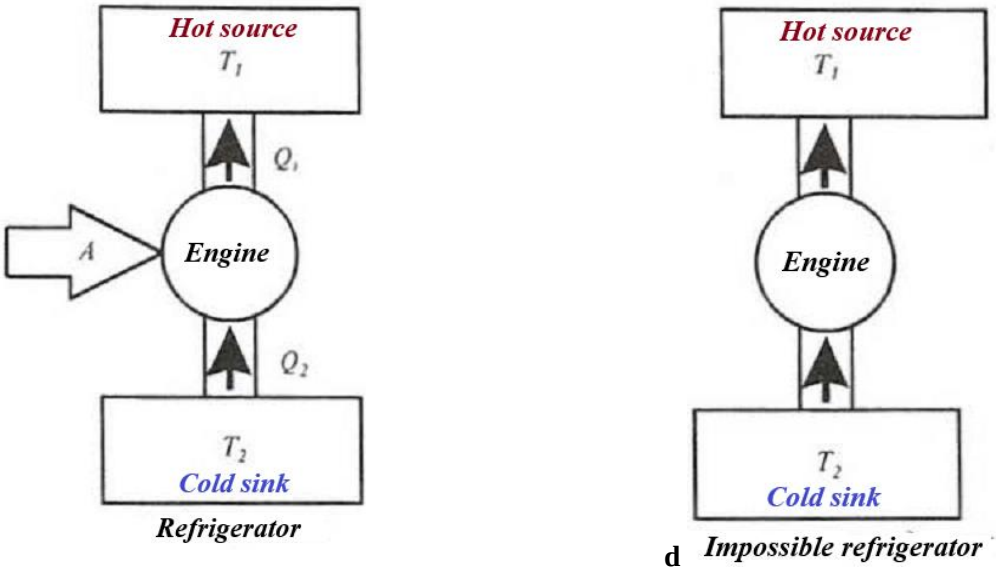

c **d**

Figure 1.3.5.1 – Heat engine diagram:
T_1 and T_2 – Hot source temperature and Cold sink temperature; A – Engine work; Q_1 – Heat input; Q_2 – Heat output.

Second Law of thermodynamics. The first law of thermodynamics expresses the general law of conservation and transformation of energy, but it is not able to determine the direction of the processes..

Second Law of thermodynamics: *heat cannot be completely converted to another form of energy, e.g., mechanical work. All natural and synthetic energy transformation processes are irreversible and occur in a preferred direction (according to the probable state). On its own, heat passes only from warmer to colder bodies, the reverse is possible only if energy is supplied*.

Fig. 1.3.5.1b-d show diagram of heat engines, the possibility or impossibility of which is dictated by the second law of thermodynamics. The heat engine shown in Fig. 1.3.5.1a obeys the second law of thermodynamics. It is impossible to have a heat engine that converts the heat received from the heater into work equivalent to it (Fig 1.3.5.1b). To transfer heat from the refrigerator to the heater, work must be done on the working fluid (Fig. 1.3.5.1c); this situation is realized in refrigeration plants (heat pump). A heat engine that transfers heat from the refrigerator to the heater without doing work is also not possible (Fig. 1.3.5.1d).

Entropy. *Entropy* S is a measure of the thermal energy in a system which is no longer capable of performing work. It is not a directly measurable quantity like pressure or temperature; only the entropy change can be estimated. The entropy change dS of a system can be well-defined as a small portion of heat δQ transferred from the surroundings to the system during a reversible process divided by the temperature T of the system during this heat transfer:

$$\frac{dQ}{T} = dS\,.$$

1. For *reversible processes*, the sum of the entropy changes is equal to zero, entropy remains constant:

$$dS = 0\,;\, S = \text{const}.$$

2. For *irreversible processes* of an *isolated system*, entropy increases:

$$dS > 0\,.$$

3. At *thermodynamic equilibrium*, entropy tends to a maximum value:

$$S \to S_{\max}\,.$$

1.3.5.3. Changes of state for gases.

Real changes in volume, pressure, or temperature of gases are replaced by a simplified model of the change in state of an *ideal gas* or approximated by a sequence of changes in state of an ideal gas.

The *ideal gas model* depends on the following assumptions:

1.) the molecules of the gas are indistinguishable, small, hard spheres;

2.) all collisions are elastic and all motion is frictionless (no energy loss in motion or collision);

3.) Newton's laws apply;

4.) the average distance between molecules is much larger than the size of the molecules;

5.) the molecules are constantly moving in random directions with a distribution of speeds;

6.) there are no attractive or repulsive forces between the molecules apart from those that determine their point-like collisions;

7.) the only forces between the gas molecules and the surroundings are those that determine the point-like collisions of the molecules with the walls;

8.) in the simplest case, there are no long-range forces between the molecules of the gas and the surroundings.

General equation of state:

$$p \cdot V = \nu \cdot R \cdot T ,$$

where $\nu = \frac{m}{M}$ is the *amount of substance* of the gas; R (від фр. ***R****apport*) is the *molar gas constant* (same for all gases) [= 8.314 J · mol^{-1} · K^{-1} or J/(mol · K)]; M is the *molar mass*; m is total mass of the gas.

Isoprocesses. An *isoprocess* is a type of thermodynamic process in which one of the state parameters (p , V or T) of a system remains constant, while the other two change at a constant mass ($m = \text{const}$). Of practical interest are *isochoric* (at constant volume), *isobaric* (at constant pressure), *isothermal* (at constant temperature), and *adiabatic reversible* (without heat exchange) processes. Adiabatic reversible processes are often used for rapid changes of state.

Application of the first law of thermodynamics to various thermodynamic processes.

1. *Isochoric* (*Isovolumetric* or *Isometric*) ($V = \text{const}$). The work is zero (see Eq. 1.3.5.1), therefore, from the first law of thermodynamics $\Delta U = Q$. «Constant volume» combustion in spark-ignition engines; heating or cooling in closed boilers.

2. *Isobaric* ($p = \text{const}$). Heat is transferred and work is performed, which is determined by $A = p \cdot (V_2 - V_1)$. «Constant pressure» combustion in diesel engines; heating or cooling in once-through boilers.

3. *Isothermal* ($T = \text{const}$). The internal energy of an ideal gas depends only on temperature; therefore, for an isothermal process $\Delta U = 0$. Slow change of state (heat flows through partitions).

4. *Adiabatic* (Heat neither supplied nor dissipated). Occurs without transferring heat between the thermodynamic system and its environment ($dQ = 0$), therefore $dU = -dA$. Compression or expansion stroke without cooling losses (the ideal condition which is virtually achieved in high-speed machines).

Table 1.3.5.5 gives the data for an ideal gas and a closed system with constant mass. The work done is calculated using the integral $\int p \cdot dV$. Heat input and heat output Q are a consequence of the first law of thermodynamics, and entropy S is a consequence of the second law.

Table 1.3.5.5 – Changes of state for gases.

Change of state (Characteristics)	State diagrams		Equations:
	in p-V coordinates	in T-S coordinates	V – Volume; p – Pressure; T – Temperature; S – Entropy; Q_{12} – Heat change; A_{12} – Work; γ – Adiabatic index or Heat capacity ratio; R – Molar gas constant

Isochoric (Constant volume)	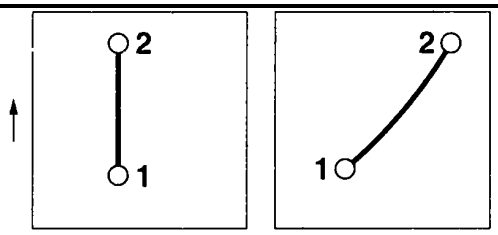	$V = V_1 = V_2 = \text{const}$ $\frac{p_1}{p_2} = \frac{T_1}{T_2}$ $Q_{12} = \frac{m \cdot R}{\gamma - 1} \cdot (T_2 - T_1)$ $A_{12} = 0$
Isobaric (Constant pressure)	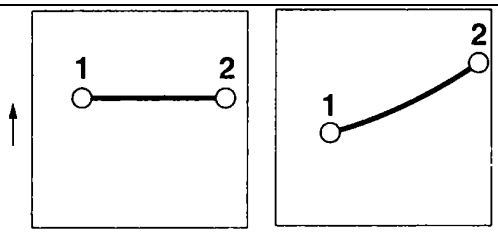	$p = p_1 = p_2 = \text{const}$ $\frac{V_1}{V_2} = \frac{T_1}{T_2}$ $Q_{12} = \frac{m \cdot R \cdot \gamma}{\gamma - 1} \cdot (T_2 - T_1)$ $A_{12} = p \cdot (V_2 - V_1)$
Isothermal (Constant temperature)	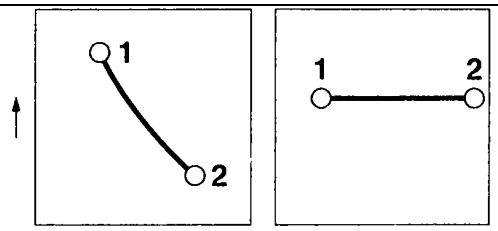	$T = T_1 = T_2 = \text{const}$ $p_1 \cdot V_1 = p_2 \cdot V_2$ $Q_{12} = -p_1 \cdot V_1 \cdot \ln \frac{p_1}{p_2}$ $A_{12} = -p_1 \cdot V_1 \cdot \ln \frac{p_1}{p_2}$
Adiabatic (Heat neither supplied nor dissipated)	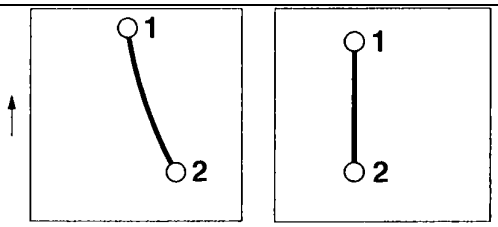	$S = S_1 = S_2 = \text{const}$ $p_1 \cdot V_1^{\gamma} = p_2 \cdot V_2^{\gamma}, \frac{V_2}{V_1} = \left(\frac{T_1}{T_2}\right)^{\frac{1}{1-\gamma}},$ $\frac{T_2}{T_1} = \left(\frac{p_2}{p_1}\right)^{\frac{\gamma-1}{\gamma}}$ $Q_{12} = 0$ $A_{12} = \frac{1}{\gamma - 1} \cdot p_1 \cdot V_1 \cdot \left[\left(\frac{p_2}{p_1}\right)^{\frac{\gamma-1}{\gamma}} - 1\right]$

1.3.6 Electrical engineering

1.3.6.1 Electromagnetic fields.

Electrical engineering deals with *electromagnetic fields* and their effects. These fields are produced by *electric charges*. Static charges produce an *electric field*, whereas moving charges give rise to a *magnetic field* as well. The relationship between these two fields is described by Maxwell's equations.

An *electric charge* is a source of an electromagnetic field associated with a material carrier; a characteristic of an elementary particle that determines its electromagnetic interaction. Charges can be *positive* (e.g., the charge of an electrified glass rod) and *negative* (e.g., the charge of an amber rod).

A *point charge* is a charge concentrated on a body whose size is small compared to the distance to other charged bodies with which it interacts.

Electric charges are integral multiples of the *elementary charge*. The minimum elementary electric charge is the charge of an electron e (from English ***e**lementary electric charge*), which is a multiple of all electric charges of bodies or particles. If $e = 1.60217733 \cdot 10^{-19}$ C (coulomb), then any charge q (from English ***q**uantity of electricity*) is equal to $n \cdot e$, where $n = 1, 2, 3, ...$

1.3.6.2 Electric field.

The electric field is caused by a charge that is constant (its size does not change) and is at rest (does not move) is called an *electrostatic field*.

L a w o f c o n s e r v a t i o n o f c h a r g e : *the net charge of an isolated system will always remain constant*:

$$q = q_1 + q_2 + ... + q_n = \text{const.}$$

The presence of fields is evidenced by the effects of their forces on other electric charges. The force between two point charges q_1 and q_2 is defined by *Coulomb's Law*. This force causes repulsion between charges of the same name and attraction between charges of different names.

C o u l o m b ' s L a w : *the magnitude, or absolute value, of the attractive or repulsive electrostatic force* F *between two point charges* q_1 *and* q_2 *is directly proportional to the product of the magnitudes of their charges and inversely proportional to the square of the distance* r *between them*:

$$F \propto q_1 \cdot q_2 \cdot \frac{1}{r^2}.$$

The force arising in a vacuum between two point electric charges q_1 and q_2 at a distance r between them is equal:

$$F = k \cdot \frac{q_1 \cdot q_2}{r^2} = \frac{1}{4\pi \cdot \varepsilon_0} \cdot \frac{q_1 \cdot q_2}{r^2},$$

where $k = \frac{1}{4\pi \cdot \varepsilon_0}$; ε_0 is electric field constant [$=8.8542 \cdot 10^{-12}$ $C^2 \cdot N^{-1} \cdot м^{-2}$ or $F \cdot m^{-1}$ or F/m].

In general, the force between two point charges in different media is defined as:

$$F = k \cdot \frac{q_1 \cdot q_2}{\varepsilon \cdot r^2} = \frac{1}{4\pi \cdot \varepsilon_0} \cdot \frac{q_1 \cdot q_2}{\varepsilon \cdot r^2}, \qquad (1.3.6.1)$$

where ε is relative permittivity (relative dielectric constant), $\varepsilon = 1$ for air.

An electric field can be defined by the following quantities: *electric field strength* E, *electric potential* φ and *voltage* U.

Electric field strength E**.** The *electric field strength* $\vec{E}$ (from English ***E****lectric field*) is a quantitative *force characteristic* of the electric field created by a charge (system of charges) at any point in the field; depends on the location point and its surrounding charges. The following equation applies to the field strength at a distance r from a point charge q_1:

$$E = k \cdot \frac{q_1}{\varepsilon \cdot r^2} = \frac{1}{4\pi \cdot \varepsilon_0} \cdot \frac{q_1}{\varepsilon \cdot r^2}.$$

The unit of measurement of electric field strength [E] is $N \cdot C^{-1}$ or N/C (newton/coulomb).

Electric field strength is a vector quantity, meaning it has both magnitude (strength) and direction. The field is depicted by *electric field lines*, lines which follow the direction of the electric field in space. Field lines due to stationary charges always originate from positive charges and terminate at negative charges (Fig. 1.3.6.1); the strength of the field is proportional to the density of the lines..

A field whose field strength at every point is the same in magnitude and direction (electric field is constant) is called a *uniform electrostatic field*; otherwise, the field is *non-uniform* (Fig. 1.3.6.2).

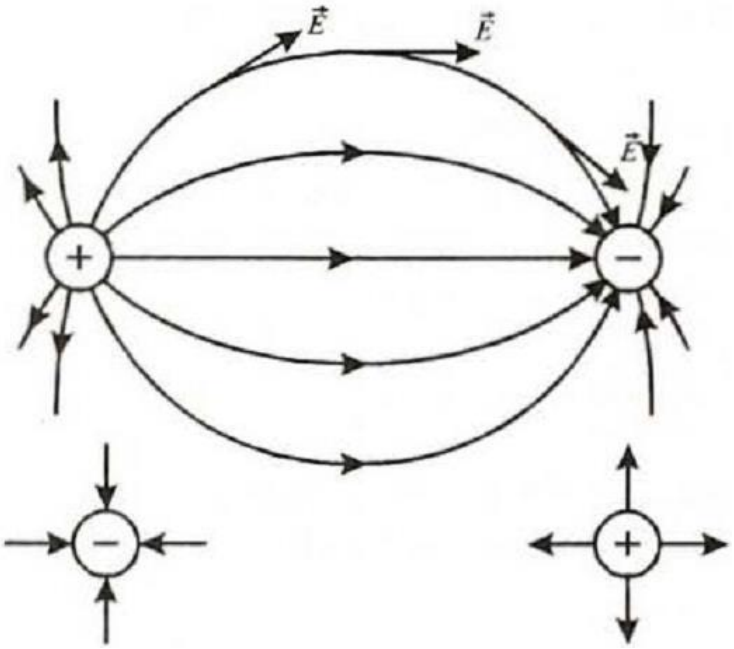

Figure 1.3.6.1 – Electric field lines: (a) between two charges; (b) single charges.

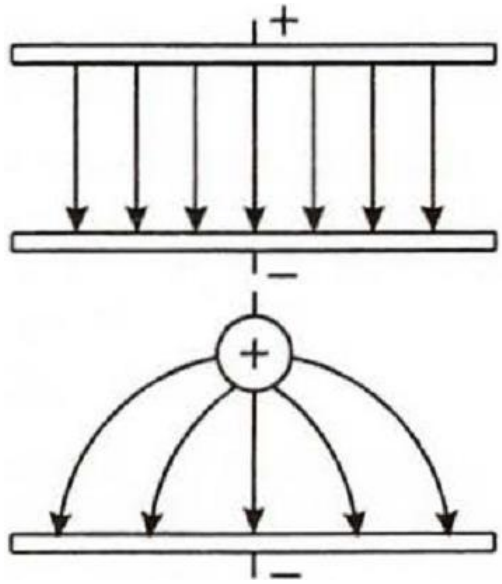

Figure 1.3.6.2 – (a) Uniform and (b) Non-uniform electric field.

S u p e r p o s i t i o n p r i n c i p l e : *the total electric field, at a point, due to a collection of charges is equal to the vector sum of the electric fields at that point due to the individual charges*:

$$\vec{E} = \vec{E}_1 + \vec{E}_2 + ... + \vec{E}_n = \sum_{i=1}^{n} \vec{E}_n \, .$$

The following force acts on charge q_2 at a point in an electric field with field strength E (created by charge q_1):

$$F = q_2 \cdot E \text{ or } F = k \cdot \frac{q_1 \cdot q_2}{\varepsilon \cdot r^2} \, .$$

The force between two point charges q_1 and q_2 is defined by Coulomb's Law (see Eq. 1.3.6.1).

Electric potential φ and voltage U. The work done by force $\vec{F}$ to move charge q by an infinitesimal distance dx is equal to:

$$dA = \vec{F} \cdot dx = q \cdot \vec{E} \cdot dx \, ,$$

where $\vec{E}$ is the electrostatic field strength created by charge q_1. This work is equal to the decrease in potential energy dW of charge q in the field under consideratio:

$$dA = -dW \rightarrow q \cdot \vec{E} \cdot dx = -dW \, .$$

For finite movements of charge q from point *1* to point *2*, the change in potential energy is equal to:

$$W_2 - W_1 = -q\int_1^2 \vec{E} \cdot dx \rightarrow \varphi_1 - \varphi_2 = \int_1^2 \vec{E} \cdot dx = k \cdot \frac{q_1}{\varepsilon} \cdot \left(\frac{1}{r_1} - \frac{1}{r_2} \right).$$

$$\varphi_1 - \varphi_2 = \frac{W_1}{q} - \frac{W_2}{q},$$

where $\varphi_2 - \varphi_1 = \Delta\varphi$ is the *potential difference*; $\varphi = \frac{W}{q} = k \cdot \frac{q_1}{\varepsilon \cdot r}$ is *potential at point*; is the electric potential energy per unit charge. The unit of measurement of electric potential [φ] is V (volt).

$$U = \varphi_1 - \varphi_2,$$

where *voltage* U is the potential difference between two points *1* and *2*; is a measure of the work required per charge to move the charge q from a reference point *1* to point *2*.

In a uniform electrostatic field directed along Ox-axis, the electric field strength is equal to the ratio of the potential difference $\Delta\varphi$ between two points at the distance d

$$\vec{E} = -\frac{\Delta\varphi}{d} \text{ or } E = \frac{U}{d}.$$

The negative sign arises as positive charges repel, so a positive charge will experience a force away from the positively charged plate (charge), in the opposite direction to that in which the voltage increases. The last formula indicates that the unit of measurement of electric field strength [E] is V · m^{-1} or V/m (volt/meter).

The locus of points in an electrostatic field where the potential values are the same is called an *equipotential surface*. Electric field lines are perpendicular (normal) to equipotential surfaces.

Electric field and matter. In a material which can be polarized (dielectric), an electric field generates *electric dipoles* (positive and negative charges ($+q$, $-q$) at a distance l; $\vec{p} = q \cdot \vec{l}$ is called the *dipole moment*) (Fig. 1.3.6.3).

The forces acting on opposite charges of a dipole from the electric field are equal in magnitude and opposite in direction; the magnitude of each force is:

$$F = q \cdot E.$$

Both forces create a *torque* $\vec{M}$:

$$\vec{M} = \vec{p} \times \vec{E} \text{ or } M = p \cdot E \cdot \sin\theta,$$

that tries to return the dipole along the field.

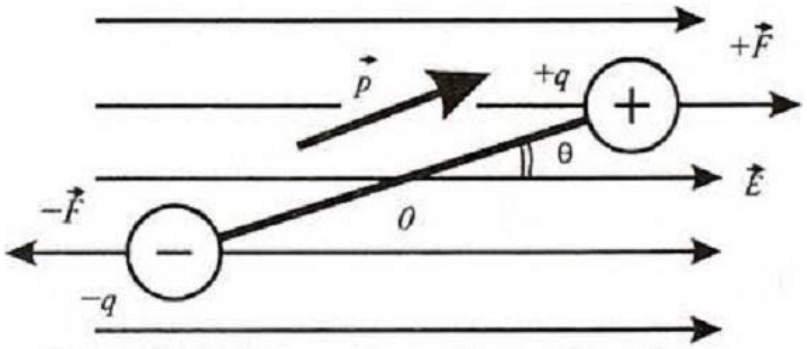

Figure 1.3.6.3 – Electric dipole.

The dipole moment per unit volume is called the *polarization* P. The field in a dielectric is created by the superposition of an external field and the field resulting from the polarization of the dielectric. The *dielectric displacement density* D indicates the density of the electric displacement flux, and is defined as follows:

$$D = \varepsilon_0 \cdot \varepsilon \cdot E = \varepsilon_0 \cdot E + P,$$

where ε_0 is the electric field constant (dielectric constant of vacuum); ε is the relative permittivity.

Parameter

$$w = \frac{1}{2} \cdot E \cdot D$$

is called the *electric field energy density*. Multiplying it by the volume, we get the electric field energy W.

Capacitor. The separation and accumulation of electric charge by bodies is possible when they are *electrified* (*Triboelectric effect* or *Triboelectricity*). If an equally charged body is brought to each of the insulated jars connected to the electroscope (see Fig. 1.3.6.4), then an triboelectric effect will occur, and the arrows on both electroscopes will diverge. This means that the jars have a certain potential. The smaller deflection of the electroscope needle of the larger jar proves that different bodies are electrified by the same charge in different ways (the larger jar was charged to a lower potential than the smaller jar with the same charge).

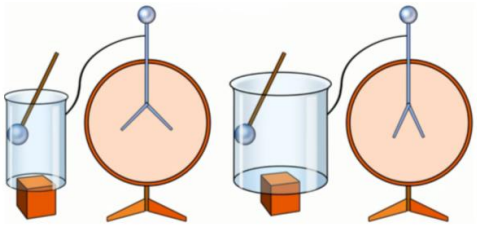

Figure 1.3.6.4 – Triboelectric effect.

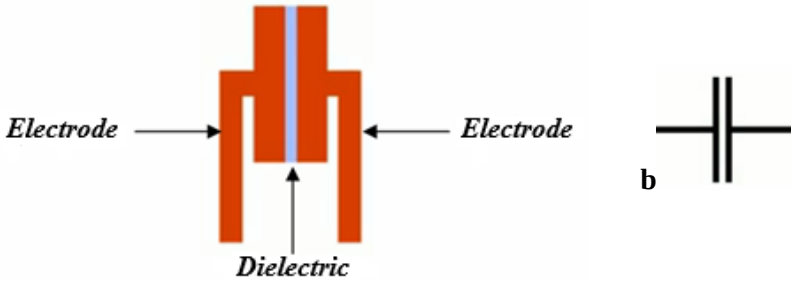

Figure 1.3.6.5 – Capacitor: (a) Structure; (b) Electronic symbol.

In electrical engineering, elements are needed that can accumulate charges. *Capacitors* are such elements. Two electrodes separated by a dielectric form a *capacitor* C (from England ***C**apacitor*) (see Fig. 1.3.6.5). To increase the capacitance of capacitors, they are made as two close metal surfaces (plates) of the largest possible area, separated by a material with the highest possible dielectric constant. When a voltage U is applied to the capacitor, the two electrodes receive equal but opposite charges; one of the electrodes (plates) is positive, the other is negative. The following equation holds for the received charge q:

$$q = C \cdot U = C \cdot (\varphi_1 - \varphi_2),$$

where $\varphi_1 - \varphi_2 = U$ is the voltage (potential difference) between the plates; C is the *capacitance* (*electrical capacitance*) of the capacitor – a scalar physical quantity that characterizes the property of a conductor to accumulate electric charge. It is dependent on the geometric shape of the electrodes, the distance d by which they are separated and the dielectric constant of the dielectric (*dielectric of permittivity*) ε. Capacitance of a *flat capacitor*:

$$C = \frac{\varepsilon \cdot \varepsilon_0 \cdot S}{d},$$

where ε_0 is the electric field constant; S is the surface area. The unit of measurement of electrical capacitance [C] is C · V^{-1} or C/V = F (farad).

Table 1.3.6.1 shows the equations capacitance C for different types of capacitors and of some conductor arrangements.

Table 1.3.6.1 – Capacitance C of some conductor arrangements in F.

Plate capacitor with n parallel plates	$C = (n-1) \cdot \frac{\varepsilon \cdot \varepsilon_0 \cdot S}{d}$	n S d	Number of plates Surface area of one plate in m^2 Distance between plates in m
Parallel conductors (twin conductors)	$C = \frac{\varepsilon \cdot \varepsilon_0 \cdot \pi \cdot l}{\ln \frac{d-r}{r}}$	l d r	Length of twin conductors in m Distance between conductors in m Conductor radius in m
Concentric conductor (cylindrical capacitor)	$C = \frac{\varepsilon \cdot \varepsilon_0 \cdot 2\pi \cdot l}{\ln \frac{r_2}{r_1}}$	l r_1, r_2	Length of conductor in m Conductor radius in m where $r_2 > r_1$
Conductor to ground	$C = \frac{\varepsilon \cdot \varepsilon_0 \cdot 2\pi \cdot l}{\ln \frac{2d}{r}}$	l d r	Length of conductor in m Distance from conductor to ground in m Conductor radius in m
Sphere with respect to distant surface	$C = \varepsilon \cdot \varepsilon_0 \cdot 4\pi \cdot r$	r	Sphere radius in m

Capacitance of capacitors connected in *series* (Fig. 1.3.6.6a) and *parallel* (Fig. 1.3.6.6b).
Capacitor connected in series:

$$\frac{1}{C_{\text{total}}} = \frac{1}{C_1} + \frac{1}{C_2}.$$

Capacitor connected in parallel:

$$C_{\text{total}} = C_1 + C_2.$$

Series connection reduces the likelihood of capacitor breakdown because only a portion of the total potential difference added to the entire battery is applied to each capacitor. Parallel connection of capacitors is used to obtain large capacitance.

Fig. 1.3.6.7 shows a flat capacitor consisting of two capacitors inserted into each other. The interleaved capacitor can be seen as a combination of several parallel connected capacitors.

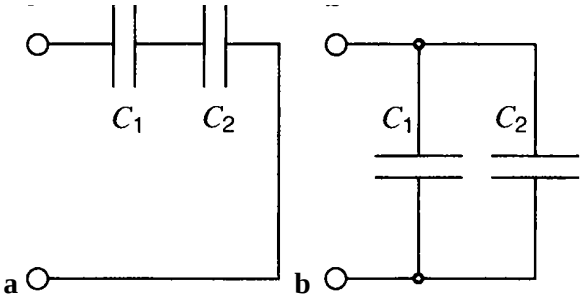

Figure 1.3.6.6 – Capacitor connected.
(a) Connected in series. (b) Connected in parallel.

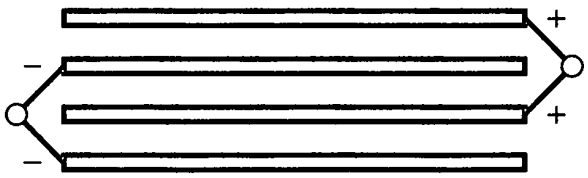

Figure 1.3.6.7 – Interleaved capacitor.

Energy content of charged capacitor (with charge q, voltage U, capacitance C):

$$W = \frac{1}{2} \cdot q \cdot U = \frac{q^2}{2C} = \frac{1}{2} \cdot C \cdot U^2.$$

1.3.6.3 Direct current (DC) and DC voltage.

Moving charges give rise to a *current* I which is characterized by its intensity. The direction of flow and magnitude of *direct current* are independent of time.

Current strength I (from the French ***I****ntensité de courant*) is a scalar quantity equal to the ratio of the charge dq transferred through the cross-section of a conductor in a small time interval dt to the value of this interval:

$$I = \frac{dq}{dt}.$$

The unit of measurement of current [I] is A (ampere).

Direct current is one-directional flow of electric charge; a current whose strength and direction do not change over time:

$$I = \frac{q}{t}.$$

The electrical system of a car is powered mainly by a *DC voltage* that is independent of time. The electric current flowing in the circuits of the car's electrical system is usually time-dependent. In many cases, a time-dependent electric current, such as a DC current, can be controlled.

Current density $\vec{j}$ is a vector characteristic of current, which is equal in magnitude to the electric charge passing per unit time through a unit area perpendicular to the ordered motion of charged particles and is equal to:

$$\vec{j} = n \cdot q \cdot \langle \vec{\upsilon} \rangle,$$

where n is the concentration of moving charges; q is the electric charge; $\langle \vec{\upsilon} \rangle$ is the average velocity of the ordered motion of charges.

With a uniform distribution of the electric current density over the cross-section of the conductor, the value of the current density is determined by the equation:

$$j = \frac{I}{S},$$

where I is the current; S is the wire cross section. The unit of measurement of current density [j] is A · m^{-2} or A/m^2 (ampere/square meter).

Direction of current flow and measurement. Current flowing from positive pole to negative pole outside the current source is designated as positive (in reality, the electrons travel from the negative to the positive pole).

An *ammeter* (A) in the current path measures current flow; voltage is measured by a *voltmeter* (V) connected in shunt (Fig. 1.3.6.8).

The accepted direction of electric current and voltage is shown by an arrow. According to this orientation, the voltage and electric current are given a sign. In the case of positive voltage and electric current, the arrow indicates the direction from the positive terminal (+) to the negative terminal (–).

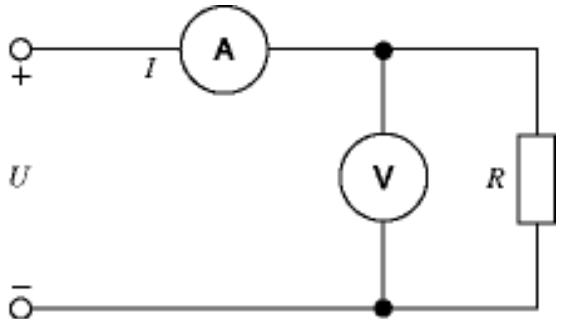

Figure 1.3.6.8 – Current and voltage measurement:
R – Load;
A – Ammeter in circuit;
V – Shuntconnected voltmeter.

Ohm's Law. Ohm's law defines the relationship between voltage U and current I in solid and liquid conductors:

$$U = R \cdot I. \qquad (1.3.6.2)$$

The constant of proportionality R is called *ohmic resistance*. The *ohmic* (*electrical*) *resistance* R (from English ***R****esistance*) is a value that characterizes the resistance of a conductor or electrical circuit to electric current. The unit of measurement of electrical resistance [R] is Ω (ohm).

The reciprocal of resistance is called *conductance* G :

$$G = \frac{1}{R},$$

and is measured in Siemens; [G] is S or A/V or 1/Ω.

Ohm's Law for a circuit section: *the electric current* I *through a conductor between two points is directly proportional to the voltage* U *across the two points and inversely proportional to the resistance* R *between them*:

$$I = \frac{1}{R} \cdot U \text{ or } I = G \cdot U.$$

Ohmic resistance depends upon the material and its dimensions. For round wire:

$$R = \rho \cdot \frac{l}{S} = \frac{1}{\sigma} \cdot \frac{l}{S},$$

where ρ is resistivity; σ is conductivity [$=\frac{1}{\rho}$]; l is wire length; S is wire cross section.

In the case of metals, resistance increases with temperature:

$$R = R_0 \cdot (1 + \alpha \cdot t),$$

where R_0 is resistance at 0 °C; α is temperature coefficient; t is temperature in °C.

Work and power. In a resistor through which current I flows, the following holds for the work produced or for the quantity of heat Q developed:

$$Q = I^2 \cdot R \cdot t = U \cdot I \cdot t.$$

Joule's Law (Joule-Lenz Law): *the power of heating generated by an electrical conductor equals the product of its resistance R and the square of the current I*. And thus for the *power*:

$$P = I^2 \cdot R = U \cdot I.$$

Kirchhoff's Laws. A *closed electrical circuit* consists of a current source, connecting conductors through which current carriers (electrons) move, and current consumers; is a network consisting of a closed loop, giving a return path for the current (see Fig. 1.3.6.9).

A *current source* is a device (a battery, power supply, or another power delivery device) in which charges move from one pole to another in a direction opposite to the direction of the electric field. These movements are carried out under the influence of external forces.

Electromotive force (emf) ε (from English ***e**lectromotive force*) or *source voltage* U_0 is a physical quantity that characterizes the action of external forces in current sources; it is equal to the ratio of the work A of external forces in moving a positive charge q along a circle to the value of this charge:

$$\varepsilon = \frac{A}{q}.$$

The unit of measurement of electromotive forces [ε, U_0] is V (volt).

Ohm's Law for a closed circuit (complete circuit): *the current I in a closed circuit is directly proportional to the electromotive force of the source ε (or U_0) and inversely proportional to the sum of the external resistance R and internal resistance r* (or R_i from the English. ***i**nternal impedance*):

$$I = \frac{\varepsilon}{R + r} \text{ or in English-language literature } I = \frac{U_0}{R + R_i}.$$

Ohm's law is used for simple circuits. In the case of complex circuits that contain *closed loops* and *branching nodes* (see Fig. 1.3.6.10), Kirchhoff's rules are used.

Kirchhoff's first Law (Kirchhoff's current Law): *the current flowing to each junction in a circuit is equal to the current flowing away from that point (or the sum of all currents entering a node is equal to the sum of all currents leaving the node)*:

$$\sum_{i=1}^{n} I_i = 0.$$

The current flowing to each junction in a circuit is «+» and the current flowing away from that point is «–».

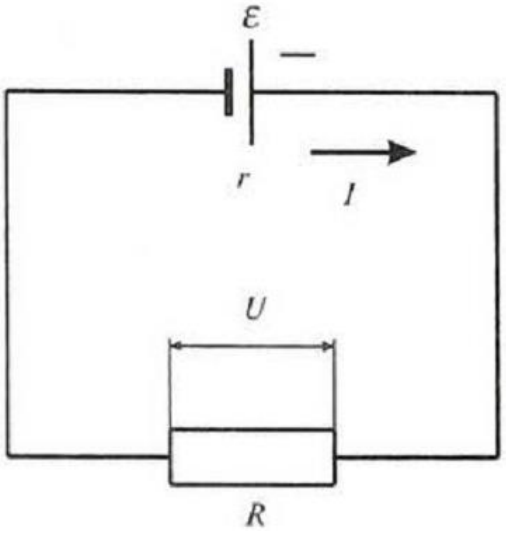

Figure 1.3.6.9 – Closed electrical circuit.

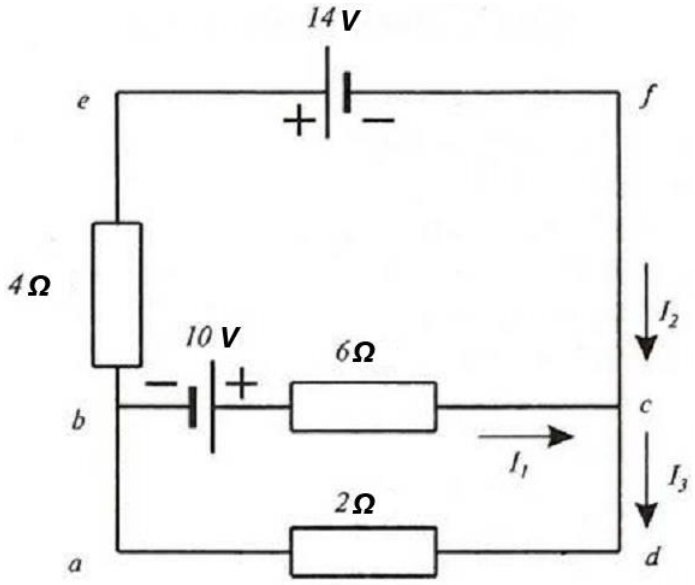

Figure 1.3.6.10 – Complex electrical circuit.

Kirchhoff's second Law (Kirchhoff's voltage Law): *the algebraic sum of the voltage drops in any closed path in a circuit is equal to the algebraic sum of the electromotive forces in that path*:

$$\sum_{i=1}^{n} I_i \cdot R_i = \sum_{i=1}^{n} \varepsilon_i \, .$$

The directions of electric currents and emf are considered positive if the direction of the current coincides with the direction of the clockwise bypass of the circuit, and the emf increases the potential in the direction of this bypass.

Direct-current circuits. Eq. 1.3.6.2 has great applied value and is used for calculations in various DC electrical circuits.

Circuit with load (Fig. 1.3.6.11):

$$U = \left(R_a + R_l\right) \cdot I \, ,$$

where R_a is the load; R_l is the line resistance.

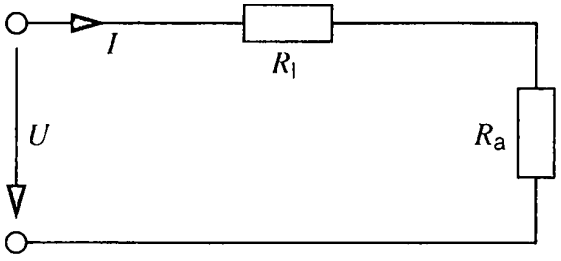

Figure 1.3.6.11 – Circuit with load: U – Voltage; I – Current; R_a – Load; R_l – Line resistance.

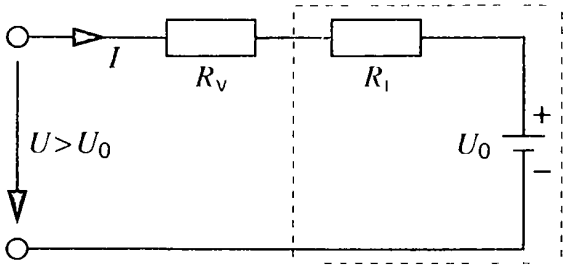

Figure 1.3.6.12 – Battery-charging circuit: U – Line voltage; U_0 – Open-circuit voltage of battery; I – Current; R_v – Series resistance; R_i – Internal resistance of battery.

Battery-charging circuit (Fig. 1.3.6.12):

$$U - U_0 = (R_v + R_i) \cdot I,$$

where U is line voltage; U_0 is open-circuit voltage (electromotive force) of battery; I is current; R_v is series resistance; R_i is internal resistance of battery.

Condition for charging: $U > U_0$ (charging voltage > battery open-circuit voltage).

Series connection of resistors (Fig. 1.3.6.13a):

$$R_{\text{total}} = R_1 + R_2,$$

$$U = U_1 + U_2.$$

The current I is the same in all resistors (Kirchhoff's first law).

Parallel connection of resistors (Fig. 1.3.6.13b):

$$\frac{1}{R_{\text{total}}} = \frac{1}{R_1} + \frac{1}{R_2} \text{ or } G_{\text{total}} = G_1 + G_2;$$

$$I = I_1 + I_2; \frac{I_1}{I_2} = \frac{R_2}{R_1}.$$

The voltage U is the same across all resistors (Kirchhoff's second law).

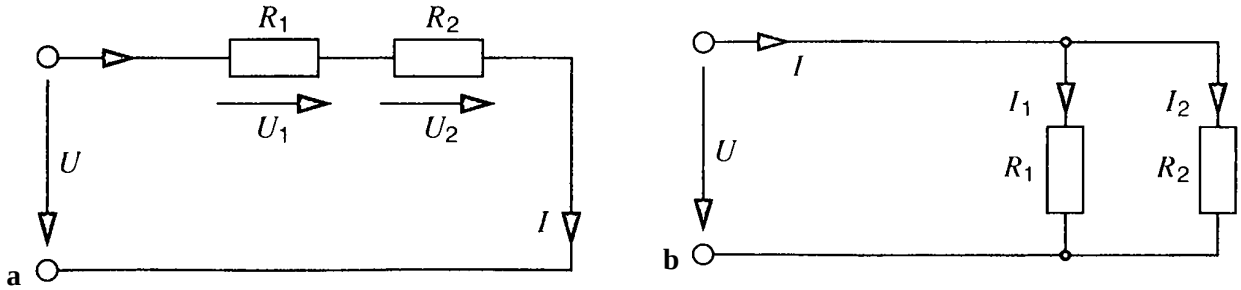

Figure 1.3.6.13 – (a) Series connection of resistors. (b) Parallel connection of resistors: U – Voltage; I – Current; R_1, R_2 – Resistors.

Measurement of a resistance

A resistance can be measured by measuring current and voltage, by using a directreading ohmmeter or a bridge circuit, e.g., Wheatstone bridge (Fig. 1.3.6.14).

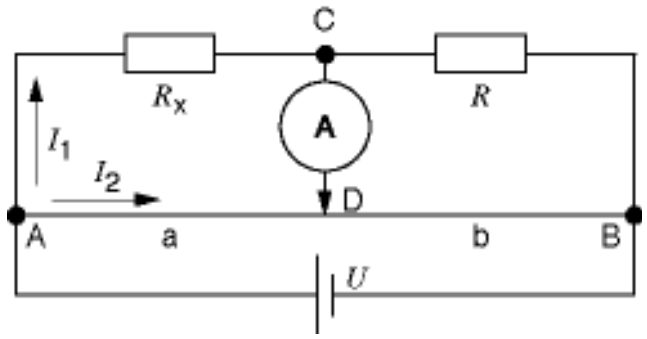

Figure 1.3.6.14 – Wheatstone bridge circuit:
R_X – Unknown resistance;
R – Known resistance;
AB – Homogeneous measuring wire (resistivity ρ) with same cross-section S at every point;
A – Galvanometer;
D – Sliding contact.

If sliding contact D is set so that Wheatstone bridge galvanometer A reads zero, the following equations apply:

$$I_1 \cdot R_X = I_2 \cdot \rho \cdot \frac{a}{S} \text{ and } I_1 \cdot R = I_2 \cdot \rho \cdot \frac{b}{S},$$

thus:

$$R_X = R \cdot \frac{a}{b}.$$

1.3.6.4 Magnetic field.

Magnetic fields are produced by moving electric charges, current-carrying conductors, magnetized bodies or by an alternating electric field. They can be detected by their effect on moving electric charges (Lorentz force) or magnetic dipoles (like poles repel, and unlike poles attract).

Magnetic fields are characterized by the vector of the magnetic *flux density* $\vec{B}$ (*induction*). Magnetic induction determines the force with which a magnetic field acts on an electric charge moving at a given point in the field. The unit of measurement of magnetic induction [B] is T (tesla).

In a uniform magnetic field (homogeneous isotropic medium), the magnetic induction vector is related to the *magnetic field strength* vector by the relation:

$$\vec{B} = \mu_0 \cdot \mu \cdot \vec{H},$$

where μ_0 is magnetic field constant [= $1.256 \cdot 10^{-6}$ N · A^{-2}]; μ is relative permeability, in a vacuum $\mu = 1$.

The unit of measurement of magnetic field strength [H] is A · m^{-1} or A/m (ampere per meter).

The force acting on a moving charge in a magnetic field is expressed by the *Lorentz force* $\vec{F}_L$ equation:

$$\vec{F}_L = q \cdot \left[\vec{\upsilon} \times \vec{B}\right] \text{or } F_L = q \cdot \upsilon \cdot B \cdot \sin\alpha,$$

where υ is velocity of charge q; B is magnetic induction; α is angle between direction of motion $\vec{\upsilon}$ and magnetic field $\vec{B}$.

The direction of the Lorentz force is determined by the l e f t - h a n d r u l e : *if the left hand is positioned so that the magnetic induction vector enters the palm, and the four extended fingers coincide with the direction of the velocity vector, then the thumb points in the direction of the force acting on the positive charge* (Fig. 1.3.6.15).

Also, the direction of the magnetic force is often determined using the r i g h t - h a n d r u l e : *if the index finger points in the direction of the velocity, and the middle finger points in the direction of the magnetic field, then the thumb points in the direction of the force* (*for a positive charge*).

When a wire carrying a steady electric current is placed in an external magnetic field, each of the moving charges in the wire experience the Lorentz force. Together, these forces produce a net macroscopic force on the wire (conductor). In a magnetic field $\vec{B}$, a force (Ampere force $\vec{F}_A$) is exerted on a current-carrying conductor I of length $\vec{l}$; if the conductor and the magnetic field form an angle of α, the following applies:

$$\vec{F}_A = I \cdot \left[\vec{l} \times \vec{B}\right] \text{or } F_A = I \cdot B \cdot l \cdot \sin\alpha.$$

The direction of Ampere's force can be determined using the l e f t - h a n d r u l e : *if the left hand is positioned so that the magnetic induction vector enters the palm, and the four extended fingers coincide*

with the direction of the current, then the thumb points in the direction of the force acting on the conductor from the field side (see Fig. 1.3.6.16).

Also, the direction of this force can be using the r i g h t - h a n d r u l e : *when the thumb is pointed in the direction of current flow, and the index finger in the direction of the magnetic field, the middle finger indicates the direction of force*.

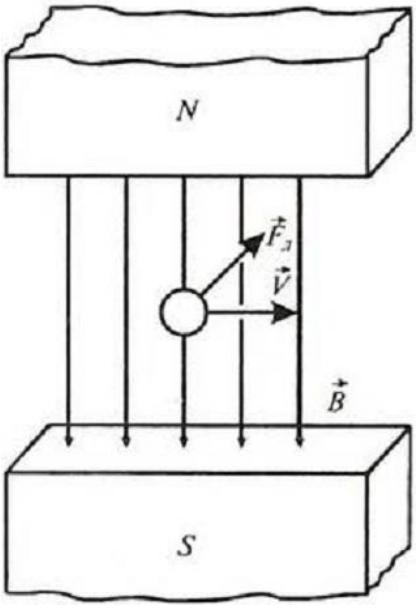

Figure 1.3.6.15 – Lorentz force.

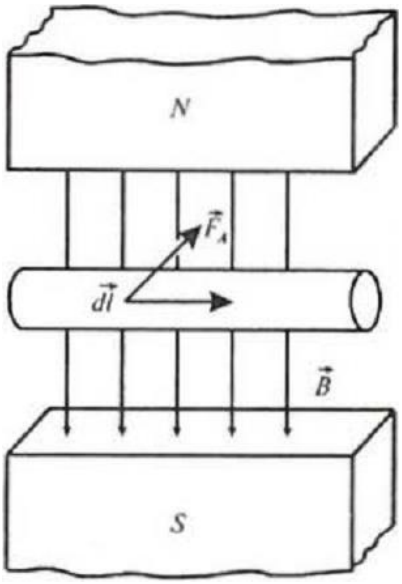

Figure 1.3.6.16 – Ampere force.

Magnetic field and matter. When electrons move in an atom along an orbital, closed orbital currents are formed, which cause their own magnetic fields. If there is no external magnetic field, these own magnetic fields are oriented randomly, and the total internal magnetic field of the material is zero. If an external magnetic field is applied to the material, an internal magnetic field is created in the material. Any material that can be magnetized under the influence of a magnetic field is called a *magnet*. Materials that are magnetized in an external magnetic field in the direction opposite to the direction of the magnetic induction vector of the field are called *diamagnetic materials* (Fig. 1.3.6.17b); in the direction of the magnetic induction vector – *paramagnetic materials* (Fig. 1.3.6.17c).

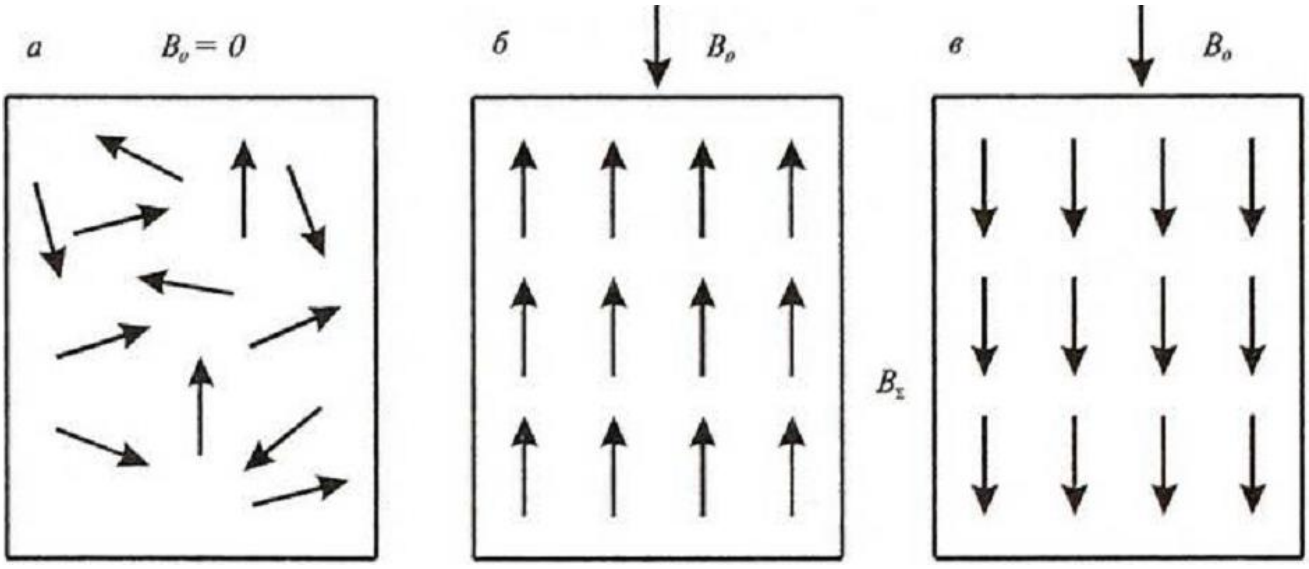

Figure 1.3.6.17 – Magnetic properties of matter.
(a) Chaotic orientation of the intrinsic magnetic fields of the electrons of a material in the absence of an external magnetic field. Magnetization of a material (b) diamagnetic in the direction opposite to the external magnetic field, (c) paramagnetic in the direction of an external magnetic field.

In matter, induction $\vec{B}$ theoretically consists of two components. One component comes from the applied field $\vec{B}_0$ [$= \mu_0 \cdot \vec{H}$] and the other from the material $\vec{B}_\Sigma$ [$= \mu_0 \cdot \chi \cdot \vec{H}$]:

$$\vec{B} = \vec{B}_0 + \vec{B}_\Sigma \text{ or } \vec{B} = \mu_0 \cdot \vec{H} + \mu_0 \cdot \chi \cdot \vec{H} = \mu_0 \cdot (1 + \chi) \cdot \vec{H},$$

where $\mu_0 \cdot \chi \cdot \vec{H}$ is the *magnetic polarization* and describes that component of flux density contributed by the material; χ is the *magnetic susceptibility* (measure of how much a material will become magnetized in an applied magnetic field).

For diamagnetic materials $\chi < 0$, and for paramagnetic materials $\chi > 0$. The value of magnetic susceptibility χ for diamagnets and paramagnets is about $10^{-6} \div 10^{-4}$.

In addition to the two classes of materials considered, there are also *ferromagnets* – materials characterized by spontaneous magnetization (the ability to become magnetized in the absence of an external magnetic field). Moreover, the internal magnetic field itself can be hundreds and thousands of times greater than the external magnetic field that caused it. A characteristic property of ferromagnets is the presence of small regions with a uniform spontaneous magnetization. These regions are called *domains*; their sizes reach $10^{-3} \div 10^{-2}$ cm (see Fig. 1.3.6.18). In the absence of an external magnetic field, the magnetic fields of the domains are oriented randomly, while the external magnetic field orients the intrinsic fields of the domains. The values of magnetic susceptibility for ferromagnets range from several tens to many thousands of units.

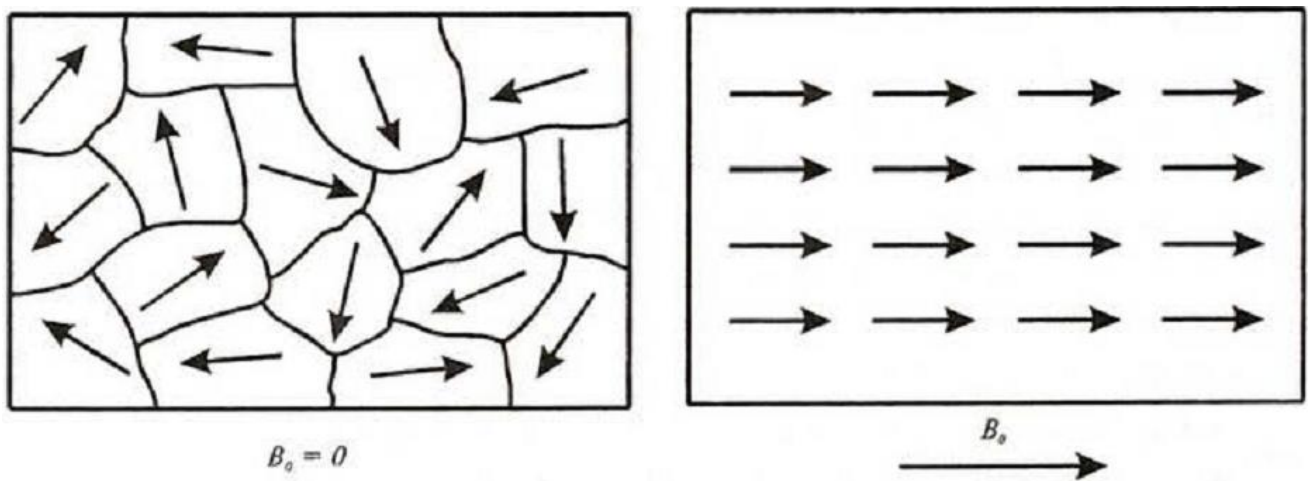

Figure 1.3.6.18 – Ferromagnetic materials (Ferromagnets).
(a) Chaotic orientation of the magnetic fields of the domains in the absence of an external magnetic field. (b) Orientation of the magnetic fields of the domains in an external magnetic field.

Remagnetization losses. In the Table 1.3.6.2 below, P1 and P1.5 represent the remagnetization losses for inductions of 1 and 1.5 tesla respectively, in a 50 Hz field at 20 °C. These losses are composed of hysteresis losses and eddy-current losses. The eddy-current losses are caused by voltages which are induced (law of induction) in the magnetically soft circuit components as a result of changes in flux during alternating-field magnetization.

Table 1.3.6.2 – Remagnetization losses.

Type of steel sheet	Nominal thickness in mm	Specific total loss in W/kg		B (для $H = 10$ kA/m) in T
		P1	P1.5	
M 270-35A	0.35	1.1	2.7	1.70
M 330-35A	0.35	1.3	3.3	1.70
M 400-50A	0.5	1.7	4.0	1.71
M 530-50A	0.5	2.3	5.3	1.74
M 800-50A	0.5	3.6	8.1	1.77

Eddy-current losses can be kept low by applying the following measures to reduce electric conductivity:

– lamination of the core;
– use of alloyed materials (e.g. silicon iron);
– use of insulated powder particles (powdered cores) in the higher frequency range);
– use of ceramic materials (ferrites).

1.3.6.5 Magnetic field and electric current.

Moving charges generate a magnetic field, i.e. conductors through which current flows are surrounded by a magnetic field. The direction in which the current flows ($\otimes$ current flow into the page, $\bullet$ current flow out of the page) and the direction of the magnetic field strength form a *right-handed screw* (Fig. 1.3.6.19).

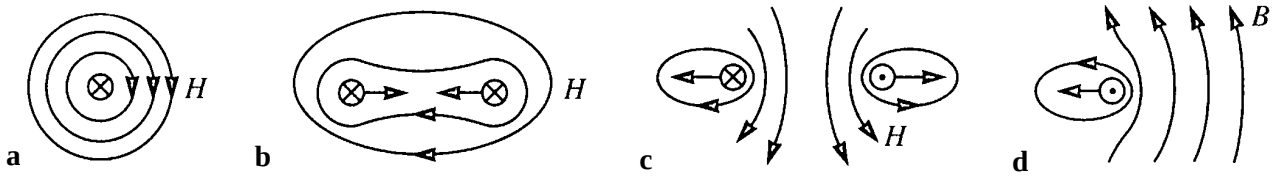

Figure 1.3.6.19 – Current-carrying conductors and associated lines of force H.
(a) A single current-carrying conductor with magnetic field. (b) Parallel conductors attract each other if current flows in the same direction. (c) Parallel conductors repel each other if current flows in opposite directions. (d) A magnetic field B exerts a force on a current-carrying conductor.

The magnetic field generated by a constant electric current I is described by the Biot-Savart Law (it relates the magnetic field to the magnitude, direction, length, and proximity of the electric current):

$$d\vec{B} = \frac{\mu \cdot \mu_0}{4\pi} \cdot \frac{I}{r^3} \cdot \left[d\vec{l} \times \vec{r} \right],$$

where $d\vec{l}$ is the vector of the infinitesimal segment of wire (differential element of the wire) in the direction of conventional current; $\vec{r}$ is the radius vector from this element of the wire to point *C*, where the magnetic field is considered; μ_0 is the magnetic constant; r is the distance from element of the wire to point *C*.

The absolute value of a vector $d\vec{B}$ is given by the equation:

$$dB = \frac{\mu \cdot \mu_0}{4\pi} \cdot \frac{I \cdot dl \cdot \sin\alpha}{r^2}, \qquad (1.3.6.3)$$

where α is the angle between vectors $d\vec{l}$ and $\vec{r}$.

The magnetic field created by certain configurations of current-carrying conductors is described by expressions that can be obtained after integrating Eq. 1.3.6.3. See the Table 1.3.6.3 – Field strength for the magnetic field H of various conductor configurations.

Table 1.3.6.3 – Field strength H (in A/m) of several conductor configurations.

Long, straight conductor, outside conductor	$H = \frac{I}{2\pi \cdot r}$	I r	Current in A Distance from conductor axis in m
Long, straight conductor, inside conductor	$H = \frac{I \cdot r}{2\pi \cdot R^2}$	I r R	Current in A Distance from conductor axis in m Conductor radius in m

Circular conductor, at center of circle	$H = \frac{I}{2r}$	I r	Current in A Radius of circular conductor in m
Cylindrical coil (solenoid)	$H = \frac{I \cdot n}{l}$	I n l	Current in A Number of turns on coil Length of coil in m

Law of induction. Any change in the magnetic flux Φ around which there is a conducting loop, caused for example by movement of the loop or changes in field strength (see Fig. 1.3.6.20), *induces a voltage* ε_i (or U_i) in the loop.

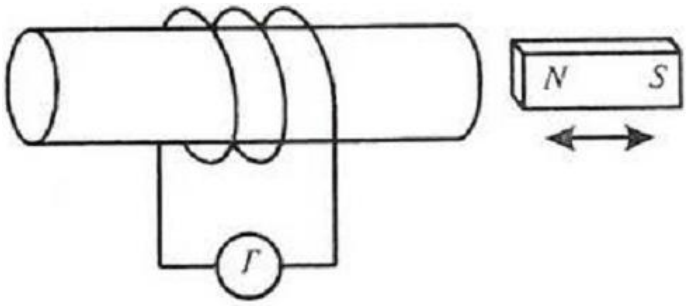

Figure 1.3.6.20 – Electromagnetic induction.

The *magnetic flux* (elementary) $d\Phi$ (from the English ***f****low*) through an elementary surface dS is a scalar quantity equal to the product of the projection B_n of the magnetic induction vector on the normal n to the surface element by the area of this element:

$$d\Phi = B_n \cdot dS .$$

The total magnetic flux through the surface S (cross-sectional area) is determined from the relationship:

$$\Phi = \int_S B_n \cdot dS .$$

For a uniform magnetic field and a flat surface S, the flux is defined as:

$$\Phi = B \cdot S \cdot \cos\alpha .$$

The unit of measurement of magnetic flux [Φ] is V · s or Wb (weber).

Further research led to the formulation of Faraday's Law of induction (flux law, and Faraday-Lenz Law): *the electromotive force (emf) around a closed circuit is equal to the negative rate of change of the magnetic flux through the circuit*:

$$\varepsilon_i = U_i = -\frac{d\Phi}{dt} \text{ or } \varepsilon_i = U_i = -\frac{\Delta\Phi}{\Delta t} = -\frac{\Delta(B \cdot S)}{\Delta t},$$

where $\Delta(B \cdot S)$ is the change in the product of magnetic induction and the area of the conductor loop; Δt is time.

This rule holds for any circuit made of thin wire and accounts for changes in flux due to variations in the magnetic field, movement of the circuit, or deformation of its shape. The direction of the induced emf is given by Lenz's Law: *the induced current will flow in such a way that its magnetic field opposes the change in the original magnetic flux* (see Fig. 1.3.6.21).

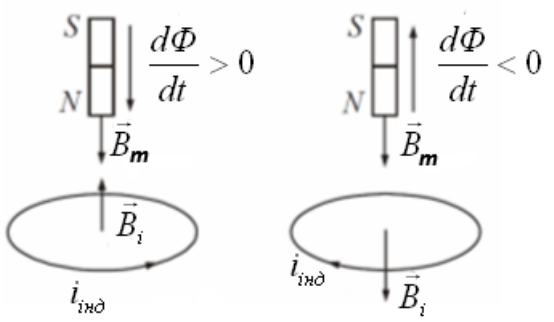

Figure 1.3.6.21 – Generation of induced current: B_m – Magnetic field of a magnet; B_i – Closed-loop magnetic field; i_{ind} – Induced current.

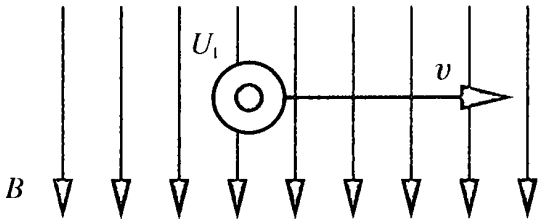

Figure 1.3.6.22 – Induction: B – Magnetic field; υ – Direction of moving conductor; U_i – Induced voltage.

The magnetic field lines emerge from the north pole *N* and enter the south pole *S*. When a magnet approaches a closed circuit (Fig. 1.3.6.21), a current is induced in it, which, by its magnetic action, prevents the magnet from approaching and the magnetic flux through the circuit from increasing. When the magnet is removed from the circuit, a current of the opposite direction is induced in it, which prevents the magnet from being removed and the magnetic flux through the circuit from decreasing.

The induced current is directly proportional to the rate of change of the magnetic field:

$$i_{ind} \sim \frac{\Delta\Phi}{\Delta t}.$$

A voltage U_i going into the page is induced in a conductor moving in direction υ through a magnetic field (see Fig. 1.3.6.22):

$$U_i = B \cdot \upsilon \cdot l,$$

where B is induction; l is conductor length; υ is velocity.

Self-induction. *Self-induction* is the phenomenon of the appearance of a eddy electric field in a conductor through which an alternating current flows. Self-induction is a special case of electromagnetic induction.

The magnetic field of a current-carrying conductor or a coil changes with the conductor current. A voltage proportional to the change in current is induced in the conductor itself and counteracts the current change producing it:

$$\varepsilon_i = U_i \propto \frac{\Delta I}{\Delta t} \text{ or } \varepsilon_i = U_i = -\frac{d(L \cdot I)}{dt} = -L \cdot \frac{dI}{dt},$$

where L (in honor of *Emil* ***L****enz*) is *inductance*; a scalar quantity that characterizes the electromagnetic properties of a conductor and is equal to the ratio of the total magnetic flux through the surface bounded by the conductor to the current in it:

$$L = \frac{\Phi}{I}.$$

The unit of measurement for inductance [L] is H (henry).

The inductance L depends upon the relative permeability μ which is constant and practically equal to 1 for most materials with the exception of ferromagnetic materials. In the case of iron-core coils therefore,

L is highly dependent upon the operating conditions. Table 1.3.6.4 shows the equations for determining inductance L of several conductor configurations.

Table 1.3.6.4 – Inductance L (in H) of several conductor configurations.

Cylindrical coil (solenoid)	$L = \mu \cdot \mu_0 \cdot \frac{n^2 \cdot S}{l} = \frac{1.257\mu}{10^6} \cdot \frac{n^2 \cdot S}{l}$	n S l	Number of turns Coil cross-section in m^2 Coil length in m
Coaxial line	$L = \mu \cdot \mu_0 \cdot \frac{l}{2\pi} \cdot \ln \frac{R_2}{R_1}$	l R_1, R_2	Length of conductors in m Conductor radius in m ($R_2 > R_1$)
Twin conductor (in air, $\mu = 1$)	$L = \mu_0 \cdot \frac{l}{\pi} \cdot \ln \frac{d}{R} = \frac{4l}{10^7} \cdot \ln \frac{d}{R}$	l d R	Length of conductors in m Distance between conductors in m Conductor radius in m
Conductor to ground (in air, $\mu = 1$)	$L = \mu_0 \cdot \frac{l}{2\pi} \cdot \ln \frac{2d}{R} = \frac{2l}{10^7} \cdot \ln \frac{2d}{R}$	l d R	Length of conductors in m Distance from conductor to ground in m Conductor radius in m

Inductance of coils connected in *series* (Fig. 1.3.6.23a) and *parallel* (Fig. 1.3.6.23b):

$$\textit{Coils connected in series } L_{\text{total}} = L_1 + L_2;$$

$$\textit{Coils connected in parallel } \frac{1}{L_{\text{total}}} = \frac{1}{L_1} + \frac{1}{L_2}.$$



Figure 1.3.6.23 – Inductance of coils connected in (a) series and (b) parallel.

The energy of the magnetic field. of a coil with inductance L, through which an electric current I flows, is equal to:

$$W = \frac{1}{2} \cdot L \cdot I^2.$$

1.3.6.6 Alternating current (AC).

The equations used to describe direct current and direct voltage can also be applied, in more-less modified form, to alternating current and voltage. In particular, Ohm's law and Kirchhoff's laws can be applied without modification.

Alternating current is a current whose magnitude and direction vary periodically (often sinusoidally) (Fig. 1.3.6.24). Its value lies in the fact that it is well suited to remote energy transmission because it can be stepped up to high voltages by means of *transformers*.

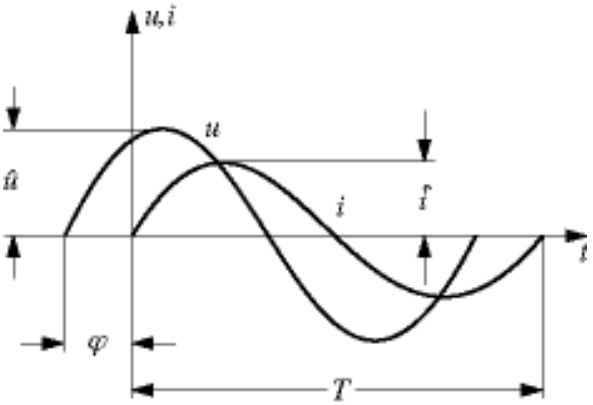

Figure 1.3.6.24 – Alternating-current diagram:
T – Duration of one complete oscillation (period) in s;
f – Frequency in Hz ($f = \frac{1}{T}$);
$\hat{i}$ – Peak value (amplitude) of current;
$\hat{u}$ – Peak value (amplitude) of voltage;
ω – Angular frequency in 1/s ($\omega = 2\pi \cdot f$);
φ – Phase displacement angle between current and voltage (phase-displaced means: current and voltage reach their peak values or cross the zero axis at different times).

Root-mean-square values of sinusoidal alternating current:

$$u = U_{eff} = \frac{\hat{u}}{\sqrt{2}} = 0.71 \cdot \hat{u} \text{ and } i = I_{eff} = \frac{\hat{i}}{\sqrt{2}} = 0.71 \cdot \hat{i} .$$

These equations indicate the magnitude of direct current which will generate the same amount of heat.

There are three kinds of power specified in an alternating-current circuit:

Active power $P = U \cdot I \cdot \cos\varphi$

Reactive power $P_q = U \cdot I \cdot \sin\varphi$

Apparent power $P_s = U \cdot I$

The *power factor* $\cos\varphi$ indicates what percentage of the apparent power is useful as actual power. The remainder, called reactive power, is useless, and oscillates between the source and the load, and loads the lines. In order to reduce the necessary size of the lines, the phase displacement angle φ is kept as small as possible, usually by using phase shifters (e.g. capacitors).

Alternating-current circuit with capacitor. Fig. 1.3.6.25 shows a circuit diagram where a capacitor is charged through a resistance installed on the side of a DC voltage source U_0, or discharged through a resistance. The time constant $\tau = R \cdot C$ is the decisive factor in the charging and discharging of a capacitor.

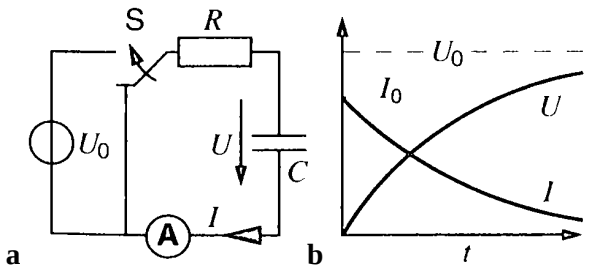

Figure 1.3.6.25 – Charging a capacitor.
(a) Circuit diagram. (b) Voltage and current curves:
U – Voltage; I – Current; R – Resistor;
C – Capacitor; A – Ammeter.

Charging:

$$I = \frac{U_0}{R} \cdot e^{-\frac{t}{\tau}}, U = U_0 \cdot \left(1 - e^{-\frac{t}{\tau}}\right).$$

Discharging:

$$I = \frac{U_0}{R} \cdot e^{-\frac{t}{\tau}} = I_0 \cdot e^{-\frac{t}{\tau}}, U = U_0 \cdot e^{-\frac{t}{\tau}},$$

where I is the charging current; U_0 is the charging voltage; U is the capacitor voltage; I_0 $[= \frac{U_0}{R}]$ is the initial current; R is the charging and discharging resistor. Charging current and discharging current are opposite directions.

When current flows through a capacitor, its charge q changes:

$$I = \frac{dq}{dt}.$$

Thus, there is a relationship between current I and voltage U on a capacitor of capacitance C:

$$I = \frac{d(C \cdot U)}{dt}.$$

Examples (capacity C is constant over time):
– DC voltage U:
→ Current $I = 0$;
– Discharge start voltage U_0, constant current I (DC):
→ Voltage $U = U_0 + I \cdot t$;
– Harmonic (sinusoidal) voltage, described by $U = \hat{u} \cdot \sin(\omega \cdot t)$:
→ Cosine current, described by

$$I = \omega \cdot C \cdot \hat{u} \cdot \cos(\omega \cdot t) = \omega \cdot C \cdot \hat{u} \cdot \sin\left(\omega \cdot t + \frac{\pi}{2}\right),$$

where $\omega = 2\pi \cdot f$ is the angular frequency, which depends on the frequency f; $\hat{u}$ is the amplitude of the voltage; $\hat{i} = \omega \cdot C \cdot \hat{u}$ is the amplitude of the current.

A capacitor of capacitance C (see Fig. 1.3.6.26) acts as a resistance of magnitude $R_C = \frac{1}{\omega \cdot C}$ (*capacitive reactance*); it also consumes no power (reactance). The countervoltage U_C across the capacitor leads the current by 90°, which in turn leads the applied voltage U by 90° and:

$$U = U_C = \frac{I}{\omega \cdot C}$$

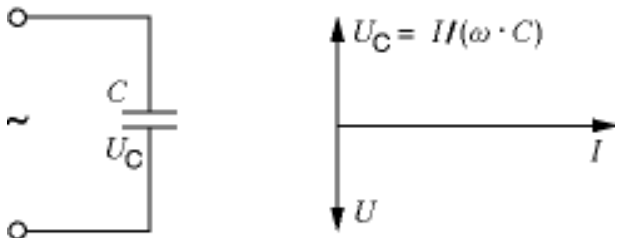

Figure 1.3.6.26 – Connection and vector diagrams, capacitor of capacitance C.

Alternating-current circuit with coils. A special case occurs when the coil is connected to a resistance installed on the side of the DC voltage source U_0 (see Fig. 1.3.6.27), or disconnected from the resistance. The decisive factor for the increase or decrease of the current in the circuit is the time constant $\tau = \frac{L}{R}$.

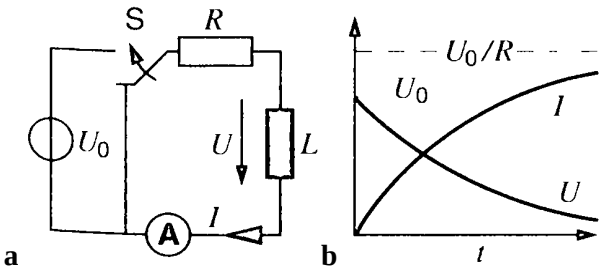

Figure 1.3.6.27 – Connecting a coil.
(a) Circuit diagram. (b) Voltage and current curves:
U – Voltage; I – Current; R – Resistor;
L – Coil of inductance; A – Ammeter.

Connecting:

$$U = U_0 \cdot e^{-\frac{t}{\tau}}, I = \frac{U_0}{R} \cdot \left(1 - e^{-\frac{t}{\tau}}\right).$$

Disconnecting:

$$I = I_0 \cdot e^{-\frac{t}{\tau}}, U = I_0 \cdot R \cdot e^{-\frac{t}{\tau}},$$

where U_0 is the excitation (connecting) voltage; I is the current flowing through the coil; I_0 is the current flowing through the coil when disconnected; R is the connecting and disconnecting resistor; U is the coil voltage. Connecting current and disconnecting current are opposite directions.

A voltage U proportional to the change in current I is induced in the coil itself and counteracts the current change producing it (see Self-induction):

$$\varepsilon_i = U_i = -\frac{d(L \cdot I)}{dt} = -L \cdot \frac{dI}{dt}.$$

Examples (inductance L is constant over time):
– Constant current I (DC):
→ Voltage $U = 0$;
– Initial current I_0, DC voltage U:
→ Current $I = I_0 + U \cdot t$;
– Sinusoidal current $I = \hat{i} \cdot \sin(\omega \cdot t)$:
→ Cosine voltage

$$U = \omega \cdot L \cdot \hat{i} \cdot \cos(\omega \cdot t) = \omega \cdot L \cdot \hat{i} \cdot \sin\left(\omega \cdot t + \frac{\pi}{2}\right),$$

where $\omega = 2\pi \cdot f$ is the angular frequency; $\hat{i}$ is the amplitude of the current; $\hat{u} = \omega \cdot L \cdot \hat{i}$ is the amplitude of the voltage.

A coil of inductance L (see Inductance of several conductor configurations) (see Fig. 1.3.6.28) acts as a resistance of magnitude $R_L = \omega \cdot L$ (*inductive resistance*). Because it consumes no energy, it is also called reactance. The induced countervoltage U_L (see Law of induction) lags the current by 90°, which in turn lags the applied voltage U by 90° and:

$$U = U_L = \omega \cdot L \cdot I .$$

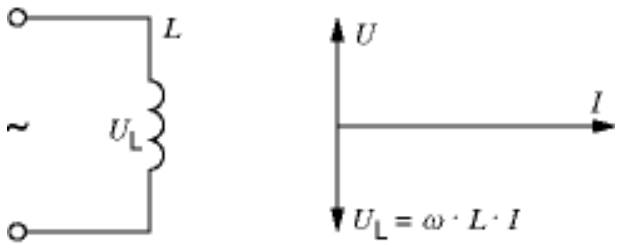

Figure 1.3.6.28 – Connection and vector diagrams, coil of inductance L.

Ohm's Law for alternating current (AC).

In an alternating-current circuit with ohmic resistance R, coil (inductance L) and capacitor (capacitance C) (see Fig. 1.3.6.29 and Fig. 1.3.6.31) the same laws apply to the electrical parameters of resistance, voltage and current as in a direct-current circuit.

In calculating the total resistance, the voltage and the current in the circuit, however, phase angle must also be considered, i.e. the vectors of the values must be added together. Vector diagrams are often used for this purpose (Fig. 1.3.6.30 and Fig. 1.3.6.32).

Series connection

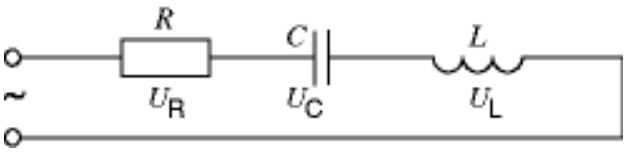

Figure 1.3.6.29 – Series connection R, C and L.

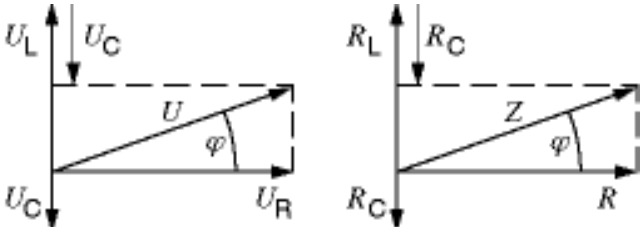

Figure 1.3.6.30 – Vector diagrams for determining U, Z, φ.

Ohm's law states that

$$U = Z \cdot I ,$$

where Z is termed *impedance* and is the vector sum of the individual resistances.

$$Z = \sqrt{R^2 + X^2} ,$$

where R is ohmic resistance; X is reactance.

$$X = \omega \cdot L - \frac{1}{\omega \cdot C},$$

where $\omega \cdot L$ is the inductive and $\frac{1}{\omega \cdot C}$ the capacitive component of reactance.

The following equation defines the phase displacement φ between current and voltage:

$$\tan\varphi = \left(\omega \cdot L - \frac{1}{\omega \cdot C}\right) \Big/ R .$$

The maximum possible current ($I = \frac{U}{R}$), flows when the circuit resonates; the circuit will resonate if:

$$\omega^2 \cdot L \cdot C = 1 \text{(i. e. } X = 0 \text{)}.$$

Parallel connection

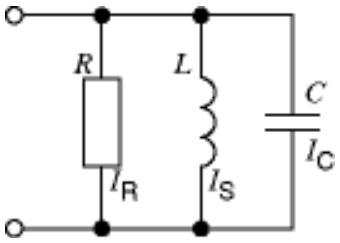

Figure 1.3.6.31 – Parallel connection R, L and C.

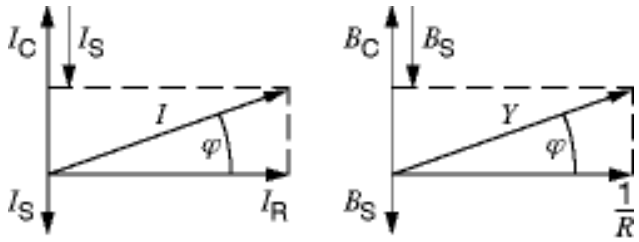

Figure 1.3.6.32 – Vector diagrams for determining I, Y, φ.

Current is determined by the following equation (Ohm's Law):

$$I = U \cdot Y ,$$

where Y is the *complex admittance* and

$$Y = \sqrt{G^2 + B^2} ,$$

where G $[= \frac{1}{R}]$ is the *conductance*; B $[= \omega \cdot C - \frac{1}{\omega \cdot L}]$ is the *susceptance*.

The following equation describes the phase displacement between current and voltage:

$$\tan\varphi = \left(\omega \cdot C - \frac{1}{\omega \cdot L}\right) \cdot R .$$

As in the case of series connection, the circuit will resonate (minimum current flows in the main winding) if:

$$\omega^2 \cdot L \cdot C = 1 \text{(i. e. } B = 0 \text{)}.$$

1.3.6.7 Electric effects in metallic conductors.

Contact potential between conductors. *Contact potential* occurs in conductors, and is analogous to the triboelectricity or contact emf in insulators (e.g. glass, hard rubber). If two dissimilar metals (at the same temperature) are joined to make metal-to-metal contact with one another and are then separated, a contact potential is present between them. This is caused by the different work functions of the two metals. The magnitude of contact potential depends upon the element positions in the electrode-potential series (see Table 1.3.6.5). If more than two conductors are so joined, the resulting contact potential is the sum of the individual contact potential values.

Thermoelectricity. A potential difference, the *galvanic voltage*, forms at the junction of two conductors due to their dissimilar work functions. The sum of all galvanic voltages is zero in a closed conductor loop (in which the temperature is the same at all points). Measurement of these potentials is only

possible by indirect means as a function of temperature (*thermoelectric effect*, *Seebeck effect*). The thermoelectric potential values are highly dependent upon impurities and material pretreatment.

The *thermoelectric series* (Table 1.3.6.6) gives the differential thermoelectromotive forces referred to a reference metal (usually platinum, copper or lead). At the hot junction, current flows from the conductor with the lower differential thermoelectromotive force to that with the higher force. The thermoelectromotive force η of any pair (*thermocouple*) equals the difference of the differential thermoelectromotive forces.

The reciprocal of the Seebeck effect is the *Peltier effect*, in which a temperature difference is created by electrical energy (*heat pump*). If current flows through an A-B-A sequence of conductors, one thermojunction absorbs heat while the other produces more heat than can be accounted for by the Joule effect. The amount of heat produced is governed by the equation:

$$\Delta Q = \Pi \cdot I \cdot \Delta t ,$$

where Π is Peltier coefficient; I is current; Δt is time interval.

Table 1.3.6.5 – Contact potential values.

Material pair	Contact potential in V
Zn/Pb	0.39
Pb/Sn	0.06
Sn/Fe	0.30
Fe/Cu	0.14
Cu/Ag	0.08
Ag/Pt	0.12
Pt/C	0.13
Zn/Pb/Sn/Fe	0.75
Zn/Fe	0.75
Zn/Pb/Sn/Fe/Cu/Ag	0.97
Zn/Ag	0.97
Sn/Cu	0.44
Fe/Ag	0.30
Ag/Au	-0.07
Ag/Cu	-0.09

Table 1.3.6.6 – Thermoelectric series (referred to platinum).

Material	Thermoelectric voltage in 10^{-6} V/°C	Material	Thermoelectric voltage in 10^{-6} V/°C
Selenium	1003	Zinc	7.0…7.9
Tellurium	500	Manganin	5.7…8.2
Silicon	448	Gold	5.6…8.0
Germanium	303	Tin	4.1…4.6
Antimony	47…48.6	Lead	4.0…4.4
Nickel chromium	22	Magnesium	4.0…4.3
Iron	18.7…18.9	Aluminium	3.7…4.1
Molybdenum	11.6…13.1	Platinum	0
Cerium	10.3	Mercury	-0.1
Cadmium	8.5…9.2	Sodium	-2.1
Steel (V2A)	7.7	Potassium	-9.4
Copper	7.2…7.7	Nickel	-19.4 -12.0
Silver	6.7…7.9	Cobalt	-19.9 -15.2
Tungsten	6.5…9.0	Constantan	-34.7 -30.4
Iridium	6.5…6.8	Bismuth ⊥ axis	-52
Rhodium	6.5	Bismuth ‖ axis	-77

The relationship between Peltier coefficient Π, temperature T and thermoelectromotive force η is as follows:

$$\Pi = \eta \cdot T .$$

Current flowing through a homogeneous conductor will also generate heat if a temperature gradient $\frac{\Delta T}{l}$ is maintained in the conductor (*Thomson effect*). Whereas the power developed by the Joule effect is proportional to I^2, the power developed by the Thomson effect is as follows:

$$P = -\sigma \cdot I \cdot \Delta T ,$$

where σ is Thomson coefficient; I is current; ΔT is temperature difference.

The reciprocal of the Thomson effect is the *Benedicks effect*, in which an electric potential is produced as a result of asymmetrical temperature distribution (particularly at points where there is a significant change in cross-sectional area).

Galvanomagnetic and thermomagnetic effects. Such effects are understood to be changes caused by a magnetic field in the flow of electricity or heat within a conductor. There are 12 different recognized effects which fall into this category, the most well-known of which are the Hall, Ettingshausen, Righi-Leduc and Nernst effects.

The *Hall effect* is of particular significance in technical applications. If a voltage is applied to a conductor located in a magnetic field perpendicular to the direction of applied voltage, a voltage is produced which is perpendicular to both the flow of current and the magnetic field (see Fig. 1.3.6.33). This voltage is called the Hall voltage U_H:

$$U_H = R_H \cdot I_V \cdot \frac{B}{d},$$

where R_H is Hall constant; I_V is supply current; B is magnetic field; d is thickness of conductor.

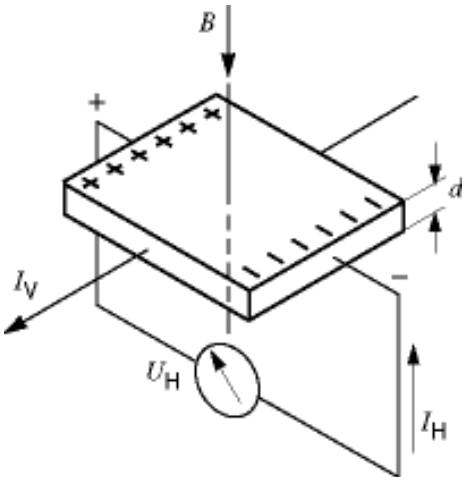

Figure 1.3.6.33 – Hall effect:
B – Magnetic field;
I_H – Hall current;
I_V – Supply current;
U_H – Hall voltage;
d – Thickness of conductor.

In ferromagnetic materials the Hall voltage is a function of magnetization (hysteresis). The Hall effect is used in Hall sensors.

1.3.7 Electronics

1.3.7.1 Fundamentals of semiconductor technology.

Electrical conductivity in solid bodies. An individual material's capacity for conducting electricity is determined by the number and mobility of the free charge carriers which it contains. The disparities in the electrical conductivities displayed by various solid bodies at room temperature extend through a range defined by 10 to the 24th power. Accordingly, materials are divided into three electrical classes. Table 1.3.7.1 provides a description of them with examples.

Table 1.3.7.1 – Classification of materials by electrical conductivity.

Conductors, metals	Semiconductors	Nonconductors, insulators
Silver	Germanium	Teflon
Copper	Silicon	Quarz glass
Aluminium	Galliumarsenide	Aluminumoxide

Conductors, metals. All solid bodies contain approximately 10^{22} atoms per cm^3 (atoms/cm^3); these are held together by electrical forces. In metals the number of free charge carriers is extremely high (one to two free electrons per atom). The free carriers are characterized by moderate mobility and high conductivity. Conductivity of good conductors: 10^6 siemens/cm (S/cm).

Nonconductors, insulators. In insulators the number of free charge carriers is practically nil, resulting in negligible electrical conductivity. Conductivity of good insulators: 10^{-18} S/cm.

Semiconductors. The electrical conductivity of semiconductors lies between that of metals and insulators. The conductivity response of the semiconductor varies from that of metals and insulators in being extremely sensitive to factors such as:

– Variations in pressure (affects the mobility of the charge carriers);
– Temperature fluctuations (number and mobility of the charge carriers);
– Variations in illumination intensity (number of charge carriers);
– and the presence of additives (number and type of charge carriers).

Because they respond to changes in pressure, temperature and light intensity, semiconductors are suitable for application in sensors.

Doping of semiconductors. Doping (controlled addition of electrically active foreign substances to the base material) makes it possible to define and localize the semiconductor's electrical conductivity. This procedure forms the basis of present-day semiconductor components. Doping can be used for technically assured production of silicon-based (10^{-2} … 10^{4} S/cm).

Electrical conductivity of semiconductors. The following discussion focuses on the silicon-based semiconductor. In its solid state, silicon assumes the form of a crystal lattice with four equidistant contiguous atoms. Each silicon atom has 4 outer electrons, with two shared electrons forming the bond with the contiguous atoms. In this ideal state silicon has no free charge carriers; thus it is not conductive. The situation changes dramatically with the addition of appropriate additives and the application of energy.

N-doping. Because only 4 electrons are required for bonding in a silicon lattice, the introduction of foreign atoms with 5 outer electrons (e.g. phosphorus) results in the presence of free electrons (see Fig. 1.3.7.1a).

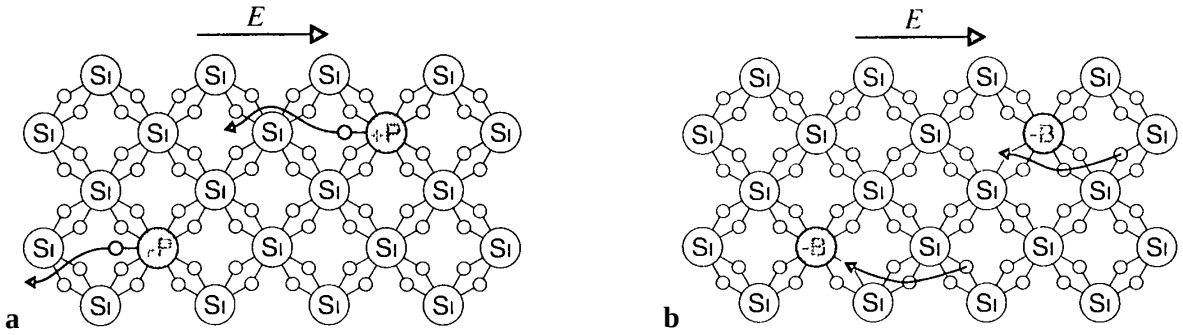

Figure 1.3.7.1 – (a) *n*- and (b) *p*-doped silicon:
o – Electron; Si – Silicon; P – Phosphorus; B – Boron; *E* – Electric field.

Thus each additional phosphorus atom will provide a free, negatively charged electron. The silicon is transformed into an *N* (negative) conductor: *n*-type silicon.

P-doping. The introduction of foreign atoms with 3 outer electrons (e.g. boron) produces electron gaps («*holes*») which result from the fact that the boron atom has one electron too few for complete bonding in the silicon lattice (see Fig. 1.3.7.1b). This *gap in the bonding pattern* is also called a hole. As the latter designation indicates, these holes remain in motion within the silicon; in an electric field, they migrate in a direction opposite to that of the electrons. The holes exhibit the properties of a free positive charge carrier. Thus every additional boron atom provides a free, positively-charged electron gap (positive hole). The silicon is transformed into a *P* (positive) conductor: *p*-type silicon.

Intrinsic conduction. Heat and light also generate free mobile charge carriers in untreated silicon; the resulting electron-hole pairs produce *intrinsic conductivity* in the semiconductor material. This conductivity is generally modest in comparison with that achieved through doping. Increases in temperature induce an exponential rise in the number of electron-hole pairs, ultimately obviating the electrical differences between the *p* and *n* regions produced by the doping procedure. This phenomenon defines the maximum operating temperatures to which semiconductor components may be subjected:

Germanium 90 ... 100 °C
Silicon 150 ... 200 °C
Gallium arsenide 300 ... 350 °C

A small number of opposite-polarity charge carriers is always present in both *n*-type and *p*-type semiconductors. These minority carriers exert a considerable influence on the operating characteristics of virtually all semiconductor devices.

The *p-n*-junction in the semiconductor. The area of transition between a *p*-type and an *n*-type zone within the same semiconductor crystal is referred to as the *p-n-junction*. The properties of this area exercise a major influence on the operating properties of most semiconductor components. The *p-n*-junction corresponds to the structure of a *diode* (Fig. 1.3.7.2a)

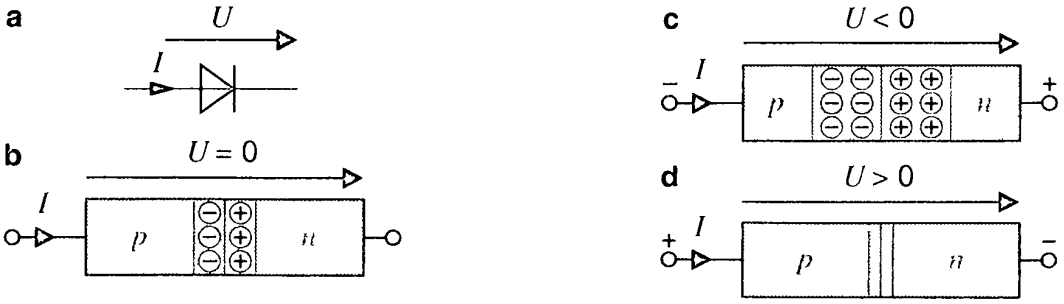

Figure 1.3.7.2 – *p-n*-junction in a diode. (a) Diode symbol. (b) *p-n*-junction without external voltage. (c) *p-n*-junction under the action of reverse voltage. (d) *p-n*-junction under the action of forward voltage: U – Applied voltage (diode voltage); I – Diode current; ⊕ – Positively charged atomic residues; – Negatively charged atomic residues.

p-n-junction without external voltage. The *p*-type zone has numerous holes (○), and the *n*-type zone has only very few. On the other hand, there are only an extremely limited number of electrons in the *p*-type zone, while in the *n*-type zone there are a very large number (●). Each type of mobile charge carrier tends to move across the concentration gradient, diffusing into the opposed zone (diffusion currents) (see Fig. 1.3.7.2b).

The loss of holes in the *p*-type zone results in a negative charge in this area, while electron depletion in the *n*-type zone produces a positive charge in this region. The result is an electrical potential (diffusion potential U_D) between the *p*- and *n*-type zones. This potential opposes the respective migration tendencies of the charge carriers, ultimately bringing the exchange of holes and electrons to a halt.

An area deficient in mobile charge carriers is produced at the *p-n*-junction. This area, the *space-charge region* or *depletion layer*, is characterized by both severely attenuated electrical conductivity and the presence of a strong electrical field.

p-n-junction without external voltage. The operation of a semiconductor diode can be studied based on a *p-n*-junction (a *p-n*-junction corresponds to the structure of a diode); the anode is in *p*-doped silicon and the cathode is in *n*-doped silicon.

Reverse state U (Fig. 1.3.7.3.3): The negative pole at the *p*-type zone and the positive pole at the *n*-type zone extends the space charge region (Fig. 1.3.7.3.1). Consequently, the flow of current I is blocked except for a minimal residual current (reverse current) which stems from the minority charge carriers. The voltage U then drops in the space charge region; accordingly, this region becomes a zone of high electric field strength (Fig. 1.3.7.2c).

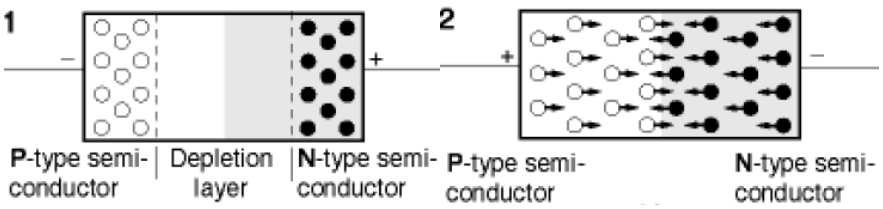

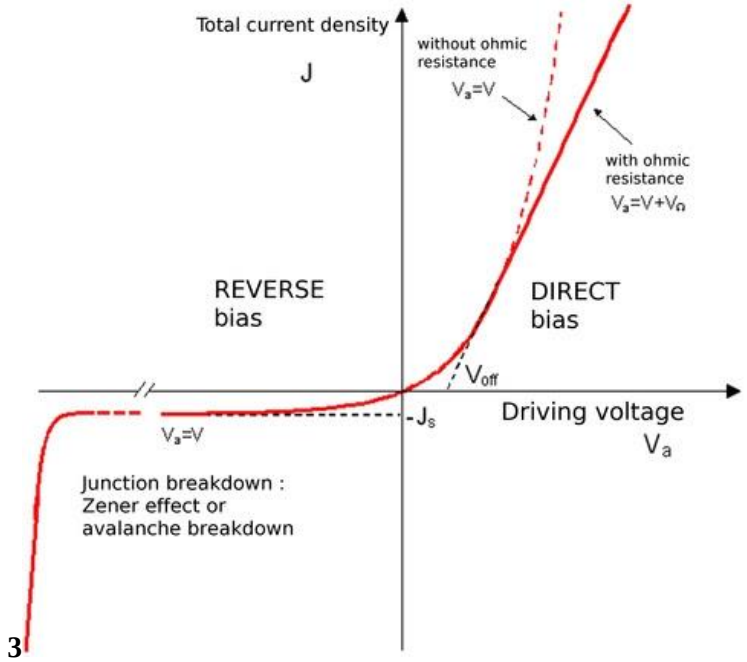

Figure 1.3.7.3 –The *p*-*n*-junction with external voltage. 1 Reverse-biased. 2 Forward-biased. 3. I - V - characteristic of a silicon diode:
U – Applied voltage (diode voltage); I – Diode current.

Forward state U (Fig. 1.3.7.3.3): With the positive pole at the *p*-type zone and the negative pole at the *n*-type zone, the depletion layer is reduced (Fig. 1.3.7.3.2) and charge carriers permeate the *p*-*n*-junction, resulting in a large current flow in the normal direction of conductance (Fig. 1.3.7.2d). Only the volume resistance (i.e. the active resistance of the doped layers) is effective. The current I grows exponentially as a function of U .

Breakdown voltage: This is the level of reverse-direction voltage beyond which a minimal increase in voltage will suffice to produce a sharp rise in reverse blocking current (Fig. 1.3.7.3.3). Cause: Separation of bonded electrons from the crystal lattice, either by high field strength (*Zener breakdown*), or due to accelerated electrons colliding with the bonded electrons and separating them from their valence bonds due to impact. This ultimately produces a dramatic rise in the number of charge carriers (*avalanche breakdown*).

1.3.7.2 Discrete semiconductor devices.

The properties of the *p*-*n*-junction and the combination of several *p*-*n*-junctions in a single semiconductor-crystal wafer (*chip*) provide the basis for a steadily increasing array of inexpensive, reliable, rugged, compact semiconductor devices.

A single *p*-*n*-junction forms a diode, two *p*-*n*-junctions are used for transistors, and three or more *p*-*n*-junctions make up a thyristor. The planar technique makes it possible to combine numerous operating elements on a single chip to form the extremely important component group known as integrated semiconductor circuits. These combine the device and the circuitry in a single unit. Semiconductor chips measure no more than several square millimeters and are usually installed in standardized housings (metal, ceramic, plastic).

Diodes. The *diode* is a semiconductor device incorporating a single *p*-*n*-junction. An individual diode's specific properties are determined by the distribution pattern of the dopant in the crystal. Diodes which conduct currents in excess of 1 A in the forward direction are referred to as *power diodes*.

Rectifier diode. The rectifier diode acts as a form of current valve; it is therefore ideally suited for rectifying alternating current. The current in the reverse direction (reverse current) can be approximately 10^7 times lower than the forward current (Fig. 1.3.7.3.3). It rises rapidly in response to increases in temperature.

Rectifiers for high reverse voltages. At least one zone with low conductivity is required for high reverse voltages (high resistance in forward direction results in generation of excessive heat). The insertion of a weakly doped zone between the highly doped *p*- and *n*-type zones produces a PIN rectifier. This type of

unit is characterized by a combination of high reverse voltage and low forward-flow resistance (conductivity modulation).

Switching diode. These devices are generally employed for rapid switching between high and low impedances. More rapid switching response can be achieved by diffusing gold into the material (promotes the recombination of electrons and holes).

Zener diode. This is a semiconductor diode which, once a specific initial level of reverse voltage is reached, responds to further increases of reverse voltage with a sharp rise in current flow. This phenomenon is a result of a Zener and/or avalanche breakdown. Zener diodes are designed for continuous operation in this breakdown range.

Variable-capacitance diode (varactor). The space charge region at the *p*-*n*-junction functions as a capacitor; the dielectric element is represented by the semiconductor material in which no charge carriers are present. Increasing the applied voltage extends the depletion layer and reduces the capacitance, while reducing the voltage increases the capacitance.

Schottky barrier diode (Schottky diode). A semiconductor diode featuring a metal-to-semiconductor junction. Because the electrons move more freely from the *n*-type silicon into the metal layer than in the opposite direction, an electron-depleted region is created in the semiconductor material; this is the Schottky barrier layer. Charges are carried exclusively by the electrons, a factor which results in extremely rapid switching, as the minority carriers do not perform any charge storage function.

Photodiode. This is a semiconductor diode designed to exploit the photovoltaic effect. Reverse voltage is present at the *p*-*n*-junction. Incident light releases electrons from their lattice bonds to produce additional free electrons and holes. These increase the reverse current (photovoltaic current) in direct proportion to the intensity of the light.

Photovoltaic solar cells. The photovoltaic effect is applied to convert light energy directly into electrical energy. Solar cells, consisting largely of semiconductor materials, are the basic elements of photovoltaic technology. Exposure to light results in the creation of free charge carriers (electron-hole pairs) in the semiconductor material due to the «internal photo-electric effect». If the semiconductor incorporates a *p*-*n*-junction, then the charge carriers separate in its electric field before proceeding to the metal contacts on the semiconductor's surface. Depending on the semiconductor material being used, a DC voltage (photovoltage) ranging between 0.5 and 1.2 V is created between the contacts.

*LED (**l**ight-**e**mitting **d**iode)*. The light-emitting diode, or LED, display is an active (self-luminous) display. It consists of a semiconductor element with *p*-*n*-junction. The charge carriers (free electrons and holes) recombine during operation in forward direction. With certain semiconductor materials, the energy which is released as a result is converted into electromagnetic radiation energy.

Frequently used semiconductor materials are: gallium arsenide (infrared), gallium arsenide phosphide (red to yellow) and gallium phosphide (green).

Bipolar transistors. Two contiguous *p*-*n*-junctions produce the transistor effect, a feature employed in the design of components used to amplify electrical signals and to assume switching duties.

Bipolar transistors consist of three zones of varying conductivity, the configuration being either *p*-*n*-*p* or *n*-*p*-*n*. The zones (and their terminals) are called: *emitter* (*E*), *base* (*B*) and *collector* (*C*) (Fig. 1.3.7.4).

There are different transistor classifications, depending on the fields of application:

– Small-signal transistors (power dissipation up to 1 watt);

– Power transistors, switching transistors;

– Low-frequency transistors, high-frequency transistors;

– Microwave transistors;

phototransistors etc.

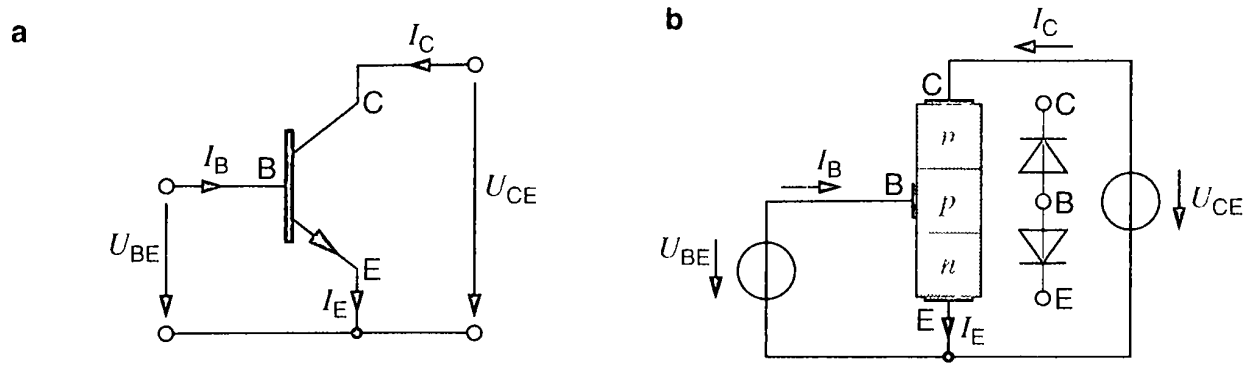

Figure 1.3.7.4 – *n-p-n* transistor. (a) Circuit. (b) Layout:
E – Emitter; *B* – Base; *C* – Collector; U_{BE} – Base-emitter voltage; U_{CE} – Collector-emitter voltage; I_B – Base current; I_C – Collector current; I_E – Emitter current.

They are termed bipolar because charge carriers of both polarities (holes and electrons) are active. In the *n-p-n* transistor, the base current's *positive* charge carriers (holes) control the flow of 100 times their number in *negative* charge carriers (electrons) from the emitter to the collector.

Operation of a bipolar transistor (explanation based on the *n-p-n* transistor) (see Fig. 1.3.7.5).

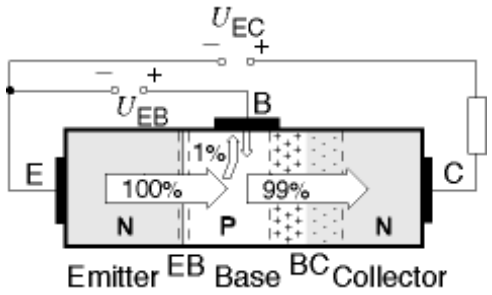

Figure 1.3.7.5 – Bipolar *n-p-n* transistor (diagram):
E – Emitter;
B – Base;
C – Collector;
U_{BE} – Base-emitter voltage;
U_{CE} – Collector-emitter voltage.

The emitter-base junction (*EB*) is forward biased (Fig. 1.3.7.4b), as a diode connected between base *B* and emitter *E*. This causes electrons to be injected into the base region.

The base-collector junction (*BC*) is reverse biased (Fig. 1.3.7.4b), as a diode connected between base *B* and collector *C*. This induces the formation of a space-charge region with a strong electrical field. Significant coupling (transistor effect) occurs if the two *p-n*-junctions lie in close proximity to each other (in silicon ≈ 10 μm). The electrons injected at the *EB* then diffuse through the base to the collector. Upon entering the *BC*'s electrical field, they are accelerated into the collector region, whence they continue to flow in the form of collector current I_C (Fig. 1.3.7.5). Thus the concentration gradient in the base is retained, and additional electrons continue to migrate from the emitter to the collector. In standard transistors 99 % or more of all the electrons emanating from the emitter reach the space-charge region and become collector current. The few missing electrons are caught in the electron gaps while traversing the *p*-doped base. Left to their own devices, these electrons would produce a negative charge in the base; almost immediately (50 ns), repulsive forces would bring the flow of additional electrons to a halt. A small base current I_B comprised of positive charge carriers (holes) provides partial or complete compensation for this negative charge in the transistor. In this case, there is an approximately linear relationship between the collector current I_C and the base current I_B:

$$I_C = \beta \cdot I_B,$$

where β is current gain and is usually from 100 to 800.

The emitter current (see Fig. 1.3.7.4 and Fig. 1.3.7.5) is calculated as:

$$I_E = I_B + I_C.$$

Since, due to the current gain β, the base current I_B is much smaller than the I_C, then:

$$I_E \approx I_C .$$

The very thin (and relatively lightly doped) base layer is a barrier whose conductivity can be adjusted by varying the base-emitter voltage U_{BE}. Small variations in U_{BE} and the base current I_B produce substantial changes in the collector current I_C and the collector-emitter voltage U_{CE}. The *n*-*p*-*n* transistor is a bipolar, current-controlled semiconductor amplifier.

Field-effect transistors (FET). In these devices, control of the current flow in a conductive path is exercised essentially by an electric field. The field, in turn, is generated with voltage applied at the control electrode, or gate (Fig. 1.3.7.6). Field-effect transistors differ from their bipolar counterparts in utilizing only a single type of charge carrier (electrons or holes), giving rise to the alternate designation «unipolar transistor». They are subdivided into the following classifications:

– ***J**unction-gate **f**ield-**e**ffect **t**ransistors* (junction FET, JFET);

– *Insulated-gate field-effect transistors*, particularly ***MOS f**ield-**e**ffect **t**ransistors* (MOSFET), in short: MOS transistors.

MOS transistors are well suited for application in highly-integrated circuitry. Power FETs represent a genuine alternative to bipolar power transistors in many applications.

Operation of a junction FET (applies to the *n*-channel FET) (Fig. 1.3.7.6). Terminals: *gate* (*G*), *source* (*S*), *drain* (*D*). DC voltage U_{DS} is present at the ends of an *n*-type crystal. Electrons flow from the source *S* to the drain *D*. The width of the channel is defined by two laterally diffused *p*-type zones and by the negative voltage U_{GS} present within them. Raising the negative gate voltage U_{GS} causes the space-charge regions to extend further into the channel, thereby constricting the current I_D path. Thus the current between source *S* and drain *D* is governed by the voltage at the control electrode *G*.

Only charge carriers of one polarity are required for FET operation. The power necessary for controlling the current is virtually nil. Thus the junction FET is a unipolar, voltage-controlled component.

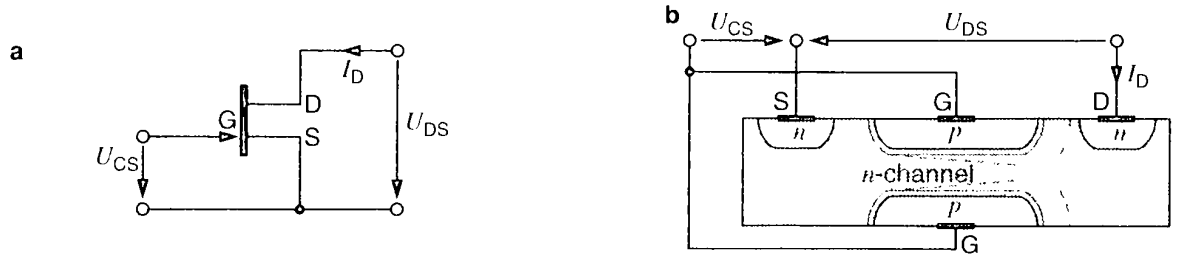

Figure 1.3.7.6 – Junction field-effect transistor (*n*-channel FET). (a) Circuit. (b) Diagram: *G* – Gate; *S* – Source; *D* – Drain; U_{DS} – Drain-source voltage; U_{GS} – Gate-source voltage; I_D – Drain current.

Operation of an MOS transistor (applies to the *p*-channel enhancement device) (Fig. 1.3.7.7). MOS represents the standard layer configuration: **M**etal-**O**xide-**S**emiconductor. If no voltage is applied at the gate electrode, then no current will flow between the source and the drain: the *p*-*n*-junctions remain in the blocking mode. The application of negative voltage at the gate causes the electrons in the adjacent *n*-type region to be displaced toward the interior of the crystal, while holes – which are always present in *n*-type silicon in the form of minority charge carriers – are pulled to the surface. A narrow *p*-type layer forms beneath the surface: this is called the *p*-channel. Current can now flow between the two *p*-type regions (source and drain). This current consists exclusively of holes. Because the gate voltage is exercised through an insulating oxide layer, no current flows in the control circuit: no power is required for the control function. In summary, the MOS transistor is a unipolar, voltage-controlled component.

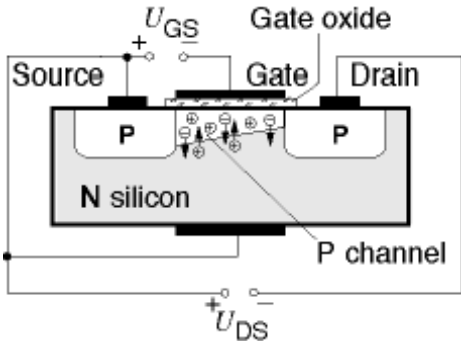

Figure 1.3.7.7 – PMOS transistor (diagram).

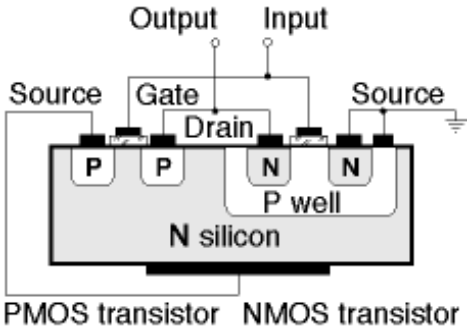

Figure 1.3.7.8 – CMOS transistor pair (diagram).

PMOS, NMOS, CMOS transistors. If a *p*-channel MOS transistor (PMOS transistor) is doped with a donor impurity rather than an acceptor impurity, it becomes an NMOS transistor. Because the electrons in the NMOS transistor are more mobile, it operates more rapidly than the PMOS device, although the latter was the first to become available due to the fact that it is physically easier to manufacture.

It is also possible to employ complementary MOS technology to pair PMOS and NMOS transistors in a single silicon chip; the resulting devices are called *Complementary MOS*, or *CMOS transistors*. (see Fig. 1.3.7.8). The specific advantages of the CMOS transistor: extremely low power dissipation, a high degree of immunity to interference, relative insensitivity to varying supply voltages, suitability for analog signal processing and highly-integrated applications.

BCD hybrid technology. Integrated power structures are becoming increasingly important. Such structures are realized by combining bipolar and MOS components on a single silicon chip, thereby utilizing the advantages of both technologies. The BCD hybrid process (***B**ipolar/**C**MOS/**D**MOS*) is a significant manufacturing process in automotive electronics and also facilitates the manufacture of MOS power components (DMOS).

1.3.7.3 Monolithic integrated circuits.

Monolithic integration. Planar technology is based on the oxidation of silicon wafers being a relatively simple matter, and the speed with which the dopants penetrate into silicon being exponentially greater than that with which they enter the oxide – doping only occurs at those locations where openings are present in the oxide layer. The specific design requirements of the individual *integrated circuit* determine the precise geometric configuration, which is applied to the wafer in a photolithographic process. All processing procedures (oxidizing, etching, doping and separation) progress consecutively from the surface plane (planar).

Planar technology makes it possible to manufacture all circuit componentry (resistors, capacitors, diodes, transistors, thyristors) and the associated conductor strips on a single silicon chip in a unified manufacturing process. The semiconductor devices are combined to produce monolithic integrated circuits: IC (***I**ntegrated **C**ircuit*).

Integration level. *Integration level* is the number of individual functional elements, the number of transistors, or the number of gates on a single chip. The following classifications relate to the level of integration (and chip surface):

– SSI (***S**mall-**S**cale **I**ntegration*). Up to roughly 100 function elements per chip, mean chip surface area 1 mm^2, but can also be very much larger in circuits with high power outputs (e.g. smart power transistors);

– MSI (***M**edium-**S**cale **I**ntegration*). Roughly 100 to 1000 function elements per chip, mean chip surface area 8 mm^2;

– LSI (***L**arge-**S**cale **I**ntegration*). Up to 100000 function elements per chip, mean chip surface area 20 mm^2;

– VLSI (***V**ery-**L**arge-**S**cale **I**ntegration*). Up to 1 million function elements per chip, mean chip surface area 30 mm^2;

– ULSI (***U**ltra-**L**arge-**S**cale **I**ntegration*). Over 1 million function elements per chip, surface area up to 300 mm^2, smallest structure sizes 25 nm.

***C**omputer-**a**ided **s**imulation* and ***d**esign* methods (CAE/CAD) are essential elements in the manufacture of integrated circuits. Entire function blocks are used in VLSI and ULSI as otherwise the time expenditure and failure risk would make development impossible.

1.3.7.4 Microprocessors in control unit.

Microprocessors, microcomputers and microcontrollers. *Microprocessor*. The *microprocessor* represents the integration of a computer's central processing unit on a single chip. Microprocessor design seeks to avoid individualization in the face of large-scale integration, and the units can be programmed to meet the varied requirements associated with specific operating conditions. There are two different main groups of processor:

– For use in PCs (**p**ersonal **c**omputers), CISC processors are used (CISC: ***C**omplete **I**nstruction **S**et **C**omputing*). These processors are very versatile and user-programmable;

– In WS (**w**ork **s**tations), RISC processors are usually used (RISC: ***R**educed **I**nstruction **S**et **C**omputing*). These processors are very much faster for the specific tasks frequently associated with WS use, but are significantly slower for all other tasks.

A microprocessor cannot operate by itself: it always acts as part of a microcomputer.

Microcomputer. The *microcomputer* consists of:

– Microprocessor serving as CPU (***C**entral **P**rocessing **U**nit*). The microprocessor contains the controller, and the arithmetic and logic unit. The arithmetic and logic unit performs the operations indicated by its name, while the controller ensures implementation of the commands stored in the program memory.

– Input and output units (I/O), which control data communication with the peripherals.

– Program memory which provides permanent storage for the operating program (user program), thus ROM, PROM or EPROM.

– Data memory for the data being run at any given time. These data change continually; thus the storage medium for this application is the RAM.

– Clock generator and power-supply system.

The *bus system* links the individual elements of the microcomputer.

A *clock generator* ensures that all the operations in the microcomputer take place within a specified timeframe.

Chips for special applications, e.g. for interrupting a program, inserting an intermediate program etc., are called *logic circuits*.

Input and output devices and external memories are classed as *peripherals*.

The main components of a microcomputer are normally combined as separate components on printed-circuit boards. For simpler tasks, such as e.g. in wireless communications in the case of Internet access, single-chip computers are increasingly being used which integrate the above-mentioned functions on a single silicon chip (system on a chip). The performance of these highly integrated systems is limited by the relatively small amount of RAM which can be accommodated at viable expense on the chip.

Microcontroller. The *microcontroller* combines the CPU function, ***r**ead-**o**nly **m**emory* (as ROM, EPROM or EEPROM), ***i**nput/**o**utput* capability (I/O) and ***r**ead/**w**rite **m**emory* (RAM) on a single chip. In contrast to the microcomputer, the controller reacts with a prespecified program which provides particular output values depending on the input information. It is used to control self- regulating systems such as e.g. engine management.

Semiconductor memories. *The principle of memory organization*. Data storage includes the following operations: Recording (writing, entering), storage (data storage in the narrow sense), retrieval and readout. The memory operates by exploiting physical properties that facilitate unambiguous production and recognition of two opposed states (binary information). In semiconductor memories, the states produced are «conductive/non-conductive» or «charged/discharged»; the latter state relies on special properties in the silicon/silicon oxide or silicon nitride/metal junction.

Classification. Semiconductor memories are divided into the two main categories of «volatile» and «non-volatile». Virtually all of them are manufactured according to CMOS technology.

Volatile memories (short-term memories) can be read out and written over an unlimited number of times, and are thus referred to as RAMs (***R**andom **A**ccess **M**emory*). The data which they contain is lost as soon as the power supply is switched off.

Non-volatile memory chips (long-term memories) retain their data even when the power supply is switched off; they are also referred to as ROMs (***R**ead-**O**nly **M**emory*).

1.3.8 Electrochemistry

1.3.8.1 Electrolytic conduction and electrolysis.

Substances whose solutions or melts (salts, acids, bases) conduct current are called *electrolytes*. In contrast to conduction in metals, *electrolytic conduction* involves chemical decomposition at the electrodes. This decomposition is called *electrolysis* and the electrodes are termed *anode* (positive pole) and *cathode* (negative pole).

When dissolved, the electrolyte dissociates into various ions which move freely. When voltage is applied, the positive ions (*cations*) migrate toward the cathode and the negative ions (*anions*) migrate toward the anode. Cations are e.g. all metal ions but also include ammonia ions (NH_4^+) and hydrogen ions (H^+). Anions comprise the ions of the non-metals, oxygen, halogens, acid radical ions and OH ions (see Automotive batteries for use in batteries).

A chemical reaction takes place at the electrodes, in which ions either absorb electrons located at the cathode or excite electrons that are deposited at the anode. These reactions can only occur if the cathode and anode have an electrically conductive connection to each other to allow the exchange of electrons between them.

Electrochemical series of metals. The intensity with which this reaction occurs is determined by the *electrochemical series of metals* (*reactivity series* or *reactivity series of elements*) given in Table 1.3.8.1. The table shows the normal potential U^0 corresponding to a concentration of 1 mol/l. The voltages are relative to the standard normal hydrogen electrode, the potential of which is 0 V. The sign «+» for U^0 indicates the absorption of electrons (reduction), and «–» means their release (oxidation). For example, lithium mainly releases electrons ($U^0 < 0$) and is oxidized, turning into a singly charged ion Li^+, while fluorine absorbs electrons ($U^0 > 0$) and is thus reduced.

Table 1.3.8.1 – Electrochemical series of metals and corresponding ionic reactions (normal potentials at 25 °C).

Reaction	U^0, V	Reaction	U^0, V
$Li^+ + e^- \leftrightarrow Li$	–3.045	$2H^+ + 2e^- \leftrightarrow H_2$	0
$Na^+ + e^- \leftrightarrow Na$	–2.714	$Cu^{2+} + 2e^- \leftrightarrow Cu$	+0.337
$Mg^{2+} + 2e^- \leftrightarrow Mg$	–2.363	$Cu^+ + e^- \leftrightarrow Cu$	+0.521
$Al^{3+} + 3e^- \leftrightarrow Al$	–1,662	$Fe^{3+} + e^- \leftrightarrow Fe^{2+}$	+0.771
$2H_2O^{2+} + 2e^- \leftrightarrow H_2 + 2OH^-$	–0.828	$Ag^+ + e^- \leftrightarrow Ag$	+0.799
$Zn^{2+} + 2e^- \leftrightarrow Zn$	–0.763	$Pt^{2+} + 2e^- \leftrightarrow Pt$	+1.118
$Cr^{3+} + 3e^- \leftrightarrow Cr$	–0.744	$4H^+ + O_2 + 4e^- \leftrightarrow 2H_2O$	+1.229
$Fe^{2+} + 2e^- \leftrightarrow Fe$	–0.440	$Cl_2 + 2e^- \leftrightarrow 2Cl$	+1.360
$PbSO_4 + 2e^- \leftrightarrow Pb + SO_4^{2-}$	–0.356	$Au^{3+} + 3e^- \leftrightarrow Au$	+1.498
$Ni^{2+} + 2e^- \leftrightarrow Ni$	–0.250	$PbO_2 + 4H^+ + 2e^- \leftrightarrow Pb^{2+} + 2H_2O$	+1.685
$Pb^{2+} + 2e^- \leftrightarrow Pb$	–0.13	$F_2 + 2e^- \leftrightarrow 2F^-$	+2.87
$Sn^{2+} + 2e^- \leftrightarrow Sn$	–0.136		

Oxidation:	$2Li \rightarrow 2Li^+ + 2e^-$,	U_{Li} = +3.045 V.
Reduction:	$F_2 + 2e^- \rightarrow 2F^-$,	U_F = +2.87 V.
Balance equation:	$2Li + F_2 \rightarrow 2Li^+ + 2F^-$,	U = +5.915 V.

The electrochemical reaction, therefore, always consists of two incomplete stages of oxidation and reduction. Since lithium releases electrons, they are on the right side of the reaction equation in comparison with the notation of Table 1.3.8.1. Thus, the sign before the voltage value for this oxidation equation changes to the opposite. The total voltage U of the redox reaction consists of individual voltages. Accordingly, the balance equation does not take into account electrons, since their exchange occurs only between reactants.

At least two different reactants are required for an electrochemical reaction to occur. The resulting total electrochemical voltage U depends on the ions concentration.

Nernst equation. The *Nernst equation* looks like this:

$$U = U^0 + \frac{R \cdot T}{n \cdot F} \cdot \ln \frac{[\mathrm{Ox}]}{[\mathrm{Red}]} = \\ = U^0 + \frac{0{,}0592\ \mathrm{B}}{n} \cdot \lg \frac{[\mathrm{Ox}]}{[\mathrm{Red}]} \quad (\text{at } 25\ ^{o}\mathrm{C}),$$

where $[\mathrm{Ox}]$ is the concentration of oxidized ions; $[\mathrm{Red}]$ is the concentration of reduced ions; n is the number of electrons transferred in the cell reaction or half-reaction; R is the universal ideal gas constant; T is the temperature in kelvins; F is Faraday's constant [= 96 485.3365(21) C/mol].

In this case, the potential can be calculated for each partial chemical reaction with individual types of ions. The total electrochemical reaction voltage is added from the total of all partial reaction potentials.

1.3.8.2 Application of the method.

Lead-acid battery. In operation, the *Lead-acid battery* is being partially discharged and then recharged. The constant cycling of the charge and discharge modes slowly wears away the active materials on the cell plates. This action eventually causes the battery plates to sulfate and replacement of the battery.

In the charged state, the positive plate material is essentially pure lead peroxide (PbO_2). The active material of the negative plates is spongy lead (Pb). The electrolyte is a solution of sulfuric acid (H_2SO_4), and water. The voltage of the cell depends on the chemical difference between the active materials.

In lead-acid batteries of passenger cars, the following electrochemical discharge reaction occurs:

Anode:$Pb \rightarrow Pb^{2+} + 2e^{-}$;

Cathode:$Pb^{4+} + 2e^{-} \rightarrow Pb^{2+}$.

Figure 1.3.8.1a shows what happens to the plates and electrolyte during discharge. The lead (Pb) from the positive plate combines with sulfate (SO_4) from the acid, forming lead sulfate ($PbSO_4$). While this is occurring, oxygen (O_2) in the active material of the positive plate joins with the hydrogen (H_2) from the electrolyte forming water (H_2O). This water dilutes the acid concentration.

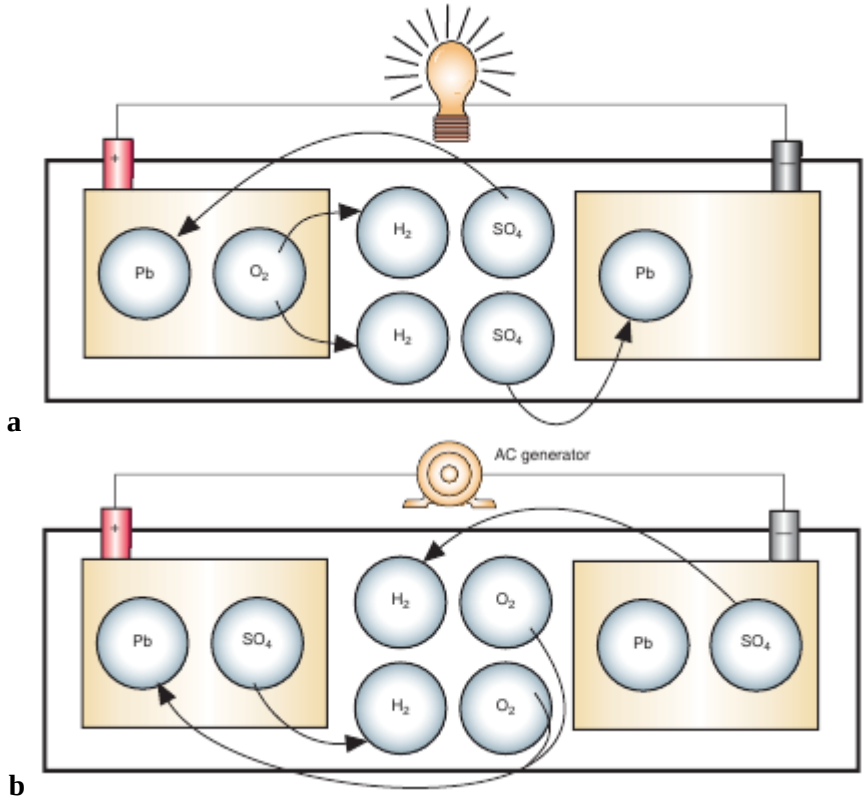

Figure 1.3.8.1 – Chemical action that occurs inside of the battery.
(a) Discharge cycle. (b) Charge cycle.

A similar reaction is occurring in the negative plate. Lead (Pb) is combining with sulfate (SO_4), forming lead sulfate ($PbSO_4$). The result of discharging is changing the positive plate from lead dioxide into lead sulfate and changing the negative plate into lead sulfate. Discharging a cell makes the positive and negative plates the same. Once they are the same, the cell is discharged.

The charge cycle is exactly the opposite (Fig. 1.3.8.1b). The lead sulfate ($PbSO_4$) in both plates is split into its original forms of lead (Pb) and sulfate (SO_4). The water in the electrolyte splits into hydrogen and oxygen. The hydrogen (H_2) combines with the sulfate to become sulfuric acid again (H_2SO_4). The oxygen combines with the positive plate to form the lead peroxide. This now puts the plates and the electrolyte back in their original form and the cell is charged.

Nickel-Metal Hydride Batteries. *Nickel-Metal Hydride (NiMH) batteries* are very quickly replacing nickel-cadmium batteries since they are more environmentally friendly. They also have more capacity than the NiCad battery since they have a higher energy density. However, they have a lower current capacity when placed under a heavy load. At this time, the NiMH is the most common HV (from English ***h**igh-**v**oltage*) battery used in the hybrid vehicle.

The NiMH battery uses a metal electrode capable of storing hydrogen. Hydrogen is absorbed by the metal electrode (M) to form metal hydride (MH). During discharge, the stored hydrogen is oxidized at the electrode, turning into water (Fig. 1.3.8.2). During charging, the reverse process occurs:

Anode:$MH + OH^- \rightarrow M + H_2O + e^-$(0.83 V);

Cathode:$NiOOH + H_2O + e^- \rightarrow Ni(OH)_2 + OH^-$(0.49 V).

Redox reaction equation:

$$MH + NiOOH \rightarrow Ni(OH)_2 + M(1.32\ V).$$

The issue facing HEV (from English ***h**igh **e**nough **v**oltages*) manufactures is that the NiMH battery has a relatively short service life. Service life suff ers as a result of the battery being subjected to several deep cycles of charging and discharging over its lifetime. In addition, NiMH cells generate heat while being charged and they require long charge times. Because of the service life issue, most batteries used in HEVs have an eight-year warranty.

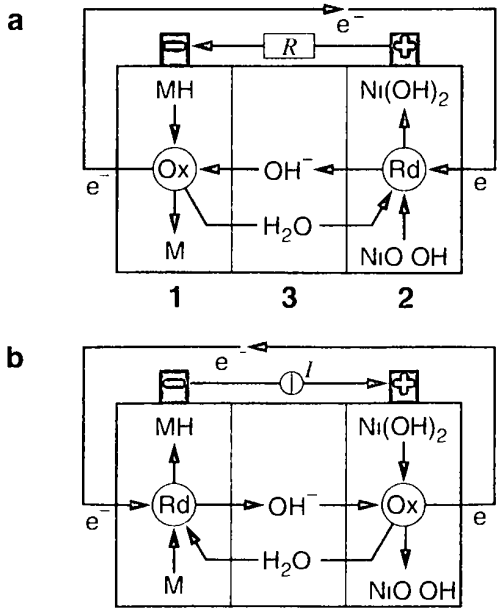

Figure 1.3.8.2 – Electrochemical processes (a) discharge and (b) charge in a NiMH battery: *1* – Anode; *2* – Cathode; *3* – Electrolyte; *R* – опір Resistance; *I* – Charging current.

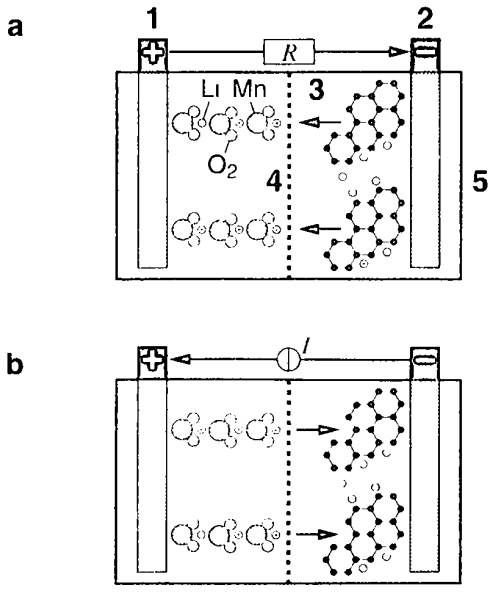

Figure 1.3.8.3 – Electrochemical processes (a) discharge and (b) charge in a Li-ion battery: *1* – Anode; *2* – Cathode; *3* – Electrolyte; *4* – Partition; *5* – Case.

A 300-volt battery is constructor of 240 cells that produce 1.2 volts each. The cells are made into a module, with each module having 6 cells. Each module is actually a self contained 7.2 volt battery.

Lithium-Ion Batteries. *Lithium-Ion (Li-ion) batteries* are very similar in construction to the nickel-based batteries. Positives associated with the use of lithium batteries include high energy density, limited

memory effect, and they being environmentally friendly. The negatives are lithium is considered an alkali metal and oxidizes very rapidly in air and water, which makes lithium highly flammable and slightly explosive when exposed to air and water. Lithium metal is also corrosive.

A Li-ion battery uses the principle of reversely adding lithium ions Li^+ to the cell and removing them. The anode electrode of a Li-ion battery is made of graphite (a form of carbon). The cathode mostly comprises graphite and a lithium alloy oxide (Fig. 1.3.8.3).

Anode:$Li_xC_n \rightarrow nC + xLi + xe^-$;

Cathode:$Li_{1-x}Mn_2O_4 + xLi + xe^- \rightarrow LiMn_2O_4$.

Redox reaction equation:

$$Li_{1-x}Mn_2O_4 + Li_xC_n \rightarrow LiMn_2O_4 + nC.$$

Depending on the cathode used, expressed using an index *n*, the ratio of intercalated lithium *x* varies.

Due to the safety issues associated with lithium metal, the Li-ion battery uses a variety of lithium compounds. A manganese li-ion battery has been developed for use in hybrid vehicles that has the potential of lasting twice as long as a NiMH battery.

1.4. Automotive materials

In the automotive manufacturing industry, a very wide and varied range of materials is used. Therefore, selecting the right material for a specific automotive component requires a very careful choice, considering all aspects related to the advantages and disadvantages of each possible solution, as the material selection depends on the manufacturing technology and the conditions required for the automotive parts.

Figure 1.4.1 shows a general classification of materials used in automotive manufacturing.

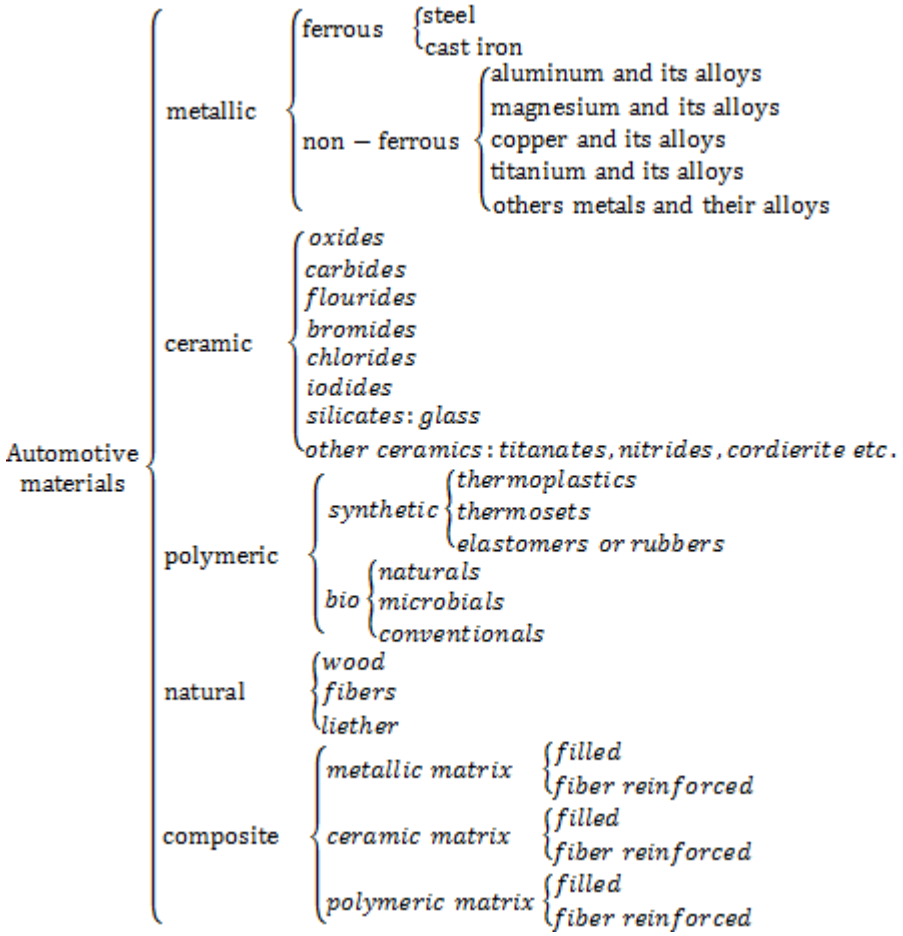

Figure 1.4.1 - Classification of automotive materials.

1.4.1. Metallic materials

The metallic materials are generally divided into ferrous and non-ferrous materials based on their main component: iron (Fe).

1.4.1.1. Ferrous metallic materials

Ferrous alloys, essential in car manufacturing, are iron-based alloys with carbon as the primary addition. This group includes steels and cast irons. Steels and white cast irons are Fe-C alloys where the carbon is present as iron carbide Fe_3C (cementite). Gray cast iron, however, contains carbon in the form of graphite. In all these alloys, iron is the main component, while carbon acts as the alloying element, modifying the properties of the base metal. In industry, the steels and cast iron are widely used due to their high mechanical and technological properties.

A. Steel

The steels are ferrous alloys with carbon content ranging from 0.02% to 2.11%. The specific properties of steel, such as its strength, hardness and ductility, are determined by the percentage of carbon it contains and the heat treatment it undergoes. Their high ductility allows them to be easily shaped through

various processes as forging and rolling and processed by cutting, turning, milling etc. However, the increasing the carbon concentration makes steels more prone to cracking during cold plastic deformation.

The Fe- Fe_3C diagram classifies steels based on their carbon content and resulting microstructure in:

•Eutectoid steel (0.77% carbon) is entirely composed of pearlite, a layered structure of ferrite and cementite that appears as alternating thin, curved layers within a grain. These layers have different orientations in neighboring pearlite grains.

•Hypoeutectoid steels (0.02-0.77% carbon) contain both ferrite and pearlite at room temperature. They show light-colored ferrite grains and darker pearlite grains. Higher pearlite content leads to the ferrite grains becoming bands that surround the pearlite. At 0.77% carbon, ferrite grains disappear.

•Hypereutectoid steels (0.77-2.11% carbon) are made of pearlite and an excess of cementite, called secondary cementite. This secondary cementite forms a light-colored network along the boundaries of the pearlite grains.

Steels with a total alloying element content of less than 2% are defined as plain carbon steels [1] and are classified based on their carbon content [2, 3]:

▪Low carbon steel (0.05-0.3% C) or mild steel. This type of steel is highly ductile, meaning it can be easily shaped without breaking. This material is mainly used for car body panels, parts of chassis and frame, panels, fuel tanks, wheels, levers etc.

▪Medium carbon steel (0.3-0.6% C). Heat treatment can significantly increase the strength and hardness of this steel while maintaining good ductility. These steels are often chosen for parts under stress where lighter weight is desired and where the part needs to harden effectively during quenching. Examples include car components as hubs, pedals, rear axle and differential housings.

▪High carbon steel (0.6-1.5% C). This steel has exceptional hardness and high strength, making it suitable for tools, dies, springs, and other applications requiring durability and resistance to wear. They are used for springs (leaf, coil and valve) and tension bars in the field of car construction.

Alloy steels

In order to enhance the quality of steels, the following alloying elements are added to liquid solutions:

-Aluminum. It improves steel's nitriding properties.

-Copper. It increases the steel's resistance to rust.

-Silicon. It is used in steel structures, typically at levels below 0.5%. However, if the concentration of silicon exceeds 1.6%, it can lead to the formation of graphite. It is intentionally added during the steelmaking process to reduce the amount of wüstite (FeO) and to increases the elasticity of steel.

-Manganese. It is used to neutralize the effects of sulfur (desulfurization) and oxygen (deoxidation) in steel. Manganese stabilizes perlite and increases hardness and wear resistance of steels.

-Chromium. It leads to increasing of steel's tensile strength, elasticity, hardness and resistance to heat and rust. It is used to product all types of bearings and synchromesh gears.

-Nickel. It improves the ductility, toughness, and resistance to heat and rust of steels by preventing excessive grain growth.

-Molybdenum. It improves the steel's strength at high temperatures.

-Vanadium. It enhances steel's strength, elasticity, and fatigue resistance.

-Tungsten improves the steel's hardness.

The alloying elements are added to modify the allotropic transformation of iron, microstructure, and critical points, thus improving physical-chemical and mechanical properties. Their content ranges lead to low-alloy (under 5%), medium-alloy (5-10%), and high-alloy (over 10%) steels.

Alloying elements in steel are classified by how they interact with carbon [4]. Some, like aluminum, cobalt, copper, nickel, and silicon, do not form carbides and instead dissolve in the iron (ferrite). Others, such as chromium, manganese, and molybdenum, form mixed carbides with iron within specific temperature ranges. A third group, including niobium, titanium, and zirconium, form very stable carbides. All carbides are hard and have high melting points. Silicon and aluminum dissolve in ferrite and slow down the transformation from ferrite to austenite. Many alloying elements decrease the amount of carbon that austenite can dissolve. The elements as chromium, silicon, titanium, vanadium, and tungsten have the greatest impact on reducing the maximum carbon solubility in austenite.

For example, in case of rack and pinion steering systems of automotive, the induction-hardenable and annealed steels like Cf 53 and 41 Cr 4 are suitable materials for the steering rack and case-hardened steels as 20 MnCr 5 and 20 MoCr 4 are appropriate for the pinion gear due to the need for the surfaces of these components to have a hardness of at least 55 HRC on the Rockwell scale [5]. The selection of these materials

is important because the steering system's coil spring applies an initial force of 0.6 kN to 1.0 kN. This force is crucial for maintaining constant contact between the steering rack and pinion gear. It also compensates for manufacturing imperfections that may arise during the creation of the gear teeth, the broaching of the steering rack, or the milling/rolling of the pinion gear. They are typically not ground after manufacturing because the play between them is already balanced.

Also, the annealed C35V steel is used for joint housing of Lemförder Fahrwerktechnik tie rod joint designed for cars and the ball pivot is made of surface-hardenable 41Cr4V steel [5].

Stainless Steels

Stainless steels are iron-based alloys containing minimum 10.5% chromium and maximum 1.2% carbon. They can be classified in function of their specific chemical composition [6]:

1. Austenitic: Fe-Cr-Ni with less than 0.1% carbon.
2. Ferritic: Fe-Cr with less than 0.1% carbon.
3. Duplex: Fe-Cr-Ni with more than 0.1% carbon.
4. Martensitic: Fe-Cr with more than 0.1% carbon.

These steels exhibit high resistance to corrosion and oxidation and high mechanical strength at high temperatures. These types of stainless steels present varying mechanical properties due to chemical composition: martensitic steels exhibit higher strength but lower ductility; austenitic steels have lower strength but higher ductility; ferritic and duplex steels fall intermediate strength and ductility. Ferritic steels have similar strength to austenitic, while duplex steels are stronger than austenitic but weaker than martensitic.

Due to their properties, the stainless steels are used for production of exhaust and inlet valves of vehicle motor [3, 7]. For exhaust valves are used the steels with 10% nickel, 12-16% chromium, and 0.74 – 0.84% carbon because they operate at much higher temperatures than inlet valves. So, the inlet valves typically are made of steels with 0.5% nickel, 7.5 to 9% chromium, and 0.4% carbon. The stainless steels consisting of 0.5% nickel, 13-15% chromium and 0.08% carbon are used for fuel caps, radiator grills, roof moldings, door pillars, wheel covers and others.

B. Cast iron

The cast iron is white (Fe - Fe_3C) and gray (Fe - Gr). Both are used in car manufacturing industry. Their names come from the appearance of a broken piece. White cast iron is used to make malleable iron, which isn't commonly used in component construction. Cast iron is suitable for engine piston rings, blocks and heads, flywheels, water jackets, elbows, gearboxes, pressure plates etc. [3, 7].

The grey iron is a most popular material for industrial parts because it is easier to machine than white cast iron. However, it is not as strong or tough as steel. The amount of graphite within the cast iron affects its strength. The increasing of graphite flakes makes it weaker and less ductile. The physical, chemical, and mechanical properties of grey cast iron make it suitable for vehicle parts as engine blocks, clutch pressure plates, cylinder heads and liners, piston rings and brake drums [3].

Gray cast iron's properties are determined by how its graphite flakes are distributed (e.g., evenly, in rosette patterns, unevenly, or aligned/unaligned between dendrites).

Based on graphite shape, there are three main types:

- Lamellar graphite gray cast iron that contains discontinuous, flake-like graphite. It is easy to cast into intricate shapes, resists thermal shock well, dampens vibrations effectively and has good lubricity.
- Nodular cast irons, also known as spheroidal graphite (SG) irons, get their name from the spherical shape of its graphite particles. They are made of hypoeutectic alloys with small additions of magnesium or cerium to transform the lamellar shape of graphite into spherical nodules. This structure gives it increased ductility, which can be further enhanced with heat treatment. Depending on how much cementite converts to graphite, it can be ferritic, pearlitic, or ferrito-pearlitic. Nodular graphite cast irons share similar properties with steel and the ease of casting. As example, the nodular graphite cast irons are used to produce wheel carriers for automotive [5].
- Malleable cast iron is made by heat-treating white cast iron. This involves holding the iron at a high temperature (816–954 °C) and then slowly cooling it through a specific temperature range (704–760 °C) [8]. The resulting material is strong and highly resistant to wear. This process alters the structure of the cast iron, causing the graphite within it to form clumps of irregular, rounded shapes, known as *temper carbon*. This shape of graphite give to cast iron increased strength compared to other types of cast iron where the carbon forms in flakes. Malleable iron remains a popular material in the automotive industry, with key applications

including parts for the drivetrain (like yokes), engine components (such as connecting rods), and even pistons in diesel engines [9]. The malleable iron is easy to machine, possessing strength comparable to grey iron but with improved ductility due to a carefully managed heat treatment process. As nodular cast iron, the malleable iron can be ferritic, pearlitic, or ferrito-pearlitic.

1.4.1.2. Non-ferrous metallic materials

Herein, it is presented the most important and widely used metals and their alloys in industry of automotive manufacturing.

Aluminum and its alloys

The need for lighter vehicles (weight reduction → lower emissions → reduced fuel consumption → improved mileage), lower production costs and reduced environmental impact led to an increased use of aluminum in automobile manufacturing. The aluminum sheet metal is commonly used for car bodies and panels, while its excellent casting properties make it suitable for engine cylinder heads and blocks, gearboxes, wheels, brake discs, rocker arms and pistons, similar to cast iron [10–12]. Cast aluminum alloys are ideal for engine cylinder heads and blocks due to their superior corrosion resistance and thermal conductivity. Besides these, the aluminum wheels can be 30-40% lighter than steel wheels on smaller vehicles. Beyond weight reduction, cast aluminum wheels offer excellent heat dissipation, strength, dimensional accuracy, and vibration dampening [13]. Wrought aluminum is also used in various automotive components as airbag housings, seat frames, and side impact panels. Aluminum is a great conductor of both heat and electricity, making it useful in things like power lines (cables) and heating elements (electrical heating appliances, car radiators etc.) [4].

Aluminum's strength can be increased by adding elements like silicon, magnesium, copper, and zinc. These additions are limited to a maximum of 15% of the alloy's total weight. The aluminum alloys fall into two groups: those that can be strengthened by heat treatment and those that cannot. Non-heat-treatable alloys include aluminum-silicon and pure aluminum, while heat-treatable alloys include aluminum-magnesium-silicon and aluminum-copper alloys. These alloys are commonly found in car parts like structural components, suspension parts and decorative elements (doors, seats, heat exchangers, shock absorbers, trunks, wheel covers and protective/soundproof covers). Notably, heat exchangers made from wrought aluminum alloys are significantly lighter (35-45% reduction) than their copper counterparts [12].

Aluminum-silicon alloys, known as *silumins*, are lightweight, resist corrosion, flow and weld easily, and are highly wear-resistant. They also have a low thermal expansion. However, their strength is lower compared to their specific weight [14, 15]. By adding a tiny amount of Na or Sr to silumin alloys, their tensile strength and ductility can be enhanced [16]. Aluminum-magnesium alloys, also known as *alumag* or *magnalium*, are lightweight, easily cast, and resistant to corrosion. Their strength and workability are influenced by the size of the intermetallic compounds they contain, such as AlMg, Al_3Mg_2, Al_3Mg_4, and Al_2Mg_3. For industrial applications, these alloys typically have to contain no more than 12% magnesium. In industry of car manufacturing, for exterior panels, where formability and surface finish are crucial, it is used a group of aluminum alloys with magnesium and silicon used as main alloying elements (6xxx series aluminum alloys). For interior panels, where stretch and drawing properties are more important, it is used a group of aluminum-magnesium alloys (5xxx series aluminum alloys). Both groups of aluminum alloys can be used for structural parts, but it is important to be monitored the magnesium content in aluminum-magnesium alloys, because the higher levels of this element can lead to the intergranular corrosion [11].

Aluminum-copper alloys are more prone to cracking during casting and are harder to cast than silumin alloys. Adding a small amount of manganese (Mn) allows them to be hot worked. Magnesium (Mg) strengthens these alloys, but reduces their flexibility. Therefore, a small amount of Mn is also added to counteract this. These Al-Cu-Mg-Mn alloys are commonly called duralumin. Among aluminum-zinc (Al-Zn) alloys, those with 15-40% aluminum or 20-40% zinc are most widely used because of their strength, wear resistance, and ability to absorb vibrations. Adding 2-5% copper (Cu) further enhances their strength and wear resistance.

The high-strength aluminum alloys (containing alloying elements: Cu, Mg, Si, Zn and Mn) exhibit higher rigidity and strength as compared to traditional steel and they are used in car manufacturing for parts as suspension, chassis, wheels and engine mounts [12].

Magnesium and its alloys

Magnesium and its alloys are increasingly used in modern car manufacturing industry. Because magnesium is lighter than aluminum, it can reduce the weight of powertrain components, leading to improved efficiency. However, magnesium's low creep resistance limits its use in high-temperature applications like engine blocks and piston heads [10]. Furthermore, its higher price compared to aluminum restricts its widespread use in car body manufacturing [17].

Magnesium is often strengthened and enhanced by adding alloying elements. Aluminum, zinc, and zirconium boost hardness through the creation of intermetallic compounds. Manganese is added to improve corrosion resistance, while tin enhances the alloy's castability. The amount of alloying elements is carefully controlled, with none exceeding 10% of the alloy's total weight. Magnesium alloy in production of car parts are used in a variety of applications, including structural components like seat and front-end frames, high-temperature components like cylinder blocks and moving parts like wheels. A key characteristic shared by all these parts is their ability to function under relatively low mechanical and chemical stress [18].

Copper and its alloys

The copper is a versatile metal known for its workability (both ductile and malleable), resistance to corrosion (from the environment, water and non-oxidizing acids) and excellent conductivity of heat and electricity [19]. It can be joined through various methods ad soldering, brazing, and welding. So, the copper is used for pipes, gaskets, coolers, radiators, electrical wiring, connectors, terminals and starter motors [3].

Common copper alloys include bronzes (alloyed with metals as tin, aluminum, manganese, chromium, lead and beryllium or non-metals as phosphorus and metalloids as silicon and arsenic), brasses (copper-zinc alloys), and copper-nickel alloys.

Tin (Sn) bronzes offer excellent corrosion resistance and anti-friction properties, but their mechanical strength changes depending on the amount of tin. Tin combines with copper to form several brittle intermetallic compounds (Cu_5Sn, $Cu_{31}Sn_8$, $Cu_{20}Sn_6$, Cu_3Sn and Cu_6Sn). Bronzes with over 15% tin are too brittle to be useful. Aluminum (Al) bronzes share this 15% limit due to brittleness, though they have better corrosion resistance than tin bronzes, but less wear resistance. By adding nickel, it can be improved their anti-friction properties. Like tin bronzes, aluminum bronzes also form brittle intermetallic compounds (Cu_3Al and $Cu_{32}Al_{19}$) as aluminum levels rise. Manganese (Mn) bronzes, usable up to about 400 °C, offer good corrosion resistance with up to 15% manganese. Silicon (Si) bronzes, particularly with up to 4% silicon, are even more corrosion resistant than tin bronzes and can be used as a substitute. The phosphor bronze is ideal for casting and it is composed of almost 10% tin and 0.35% phosphorus. Its superior load-bearing capacity and abrasion resistance make it an excellent material for bearings, so being suitable for worm wheels, bearing bushes etc. By replacing the phosphorus with zinc, it is obtained a similar alloy called gunmetal typically used for petrol pipe fittings, pump castings, small gears and bushes [3].

Brass alloys typically contain 50% or less zinc because higher zinc concentrations lead to increased hardness and brittleness. This is caused by the formation of intermetallic compounds as CuZn, Cu_5Zn_8, and $CuZn_3$. Brass with up to 39% zinc can be shaped through both hot and cold working processes. However, brass containing 46% to 50% zinc can only be shaped when by heating. The addition of elements like tin, manganese and aluminum, resistance to corrosion of brass can be enhanced. Manganese and aluminum also boost tensile strength, while manganese additionally improves the alloy's resistance to creep. Although lead doesn't dissolve in copper-zinc alloys, its presence improves the material's machinability [4]. In car manufacturing industry, the brass alloys are suitable to be used for door handles, electrical terminals and contacts, reflector pressings, radiator shells, high-duty bushings, nuts, rivets, screws, nipples, carburetor parts, grease gun fittings and pipeline connections [3].

Copper-nickel alloys mix perfectly in any proportion, forming a single-phase structure. They are highly resistant to corrosion, malleable and ductile. As the nickel content increases up to 50%, the alloys become stronger, but their toughness and ability to conduct electricity decrease. In car manufacturing, these alloys are used for brake lines and hydraulic systems.

Titanium and its alloys

The titanium is exceptionally corrosion-resistant. As iron, it exists in two crystalline forms depending on temperature: alpha (hexagonal) at room temperature (23 °C) and beta (body-centered cubic) between 882 °C and its melting point (1668 °C) [4]. Titanium alloys are created to enhance strength (tensile, compressive, bending, or creep) at specific temperatures. The aluminum is commonly added as alloying element to stabilize the alpha phase, while vanadium, molybdenum or silicon to stabilize the beta phase. Other elements

like niobium, tin, zirconium or chromium may be added to achieve specific properties. The Ti-6Al-4V alloy is a combination of alpha and beta phases and exhibits an excellent corrosion resistance and a high strength-to-weight ratio. The titanium and titanium alloys are desirable for vehicle manufacturing due to their high strength and high resistance to heat and corrosion as compared to other lightweight materials, making them suitable for demanding engine components [20]. However, their high cost currently prevents widespread use in regular cars. While titanium alloys are too expensive for mass-produced parts right now, they are being explored for new applications, like fuel cell separators. These separators need a high strength-to-weight ratio and excellent corrosion resistance.

1.4.2. Ceramic materials

Engineering ceramics composed of pure oxides, carbides and nitrides – most notably alumina, silica, zirconia, silicon carbide and silicon nitride – find applications in diverse fields like automotive manufacturing, aerospace, electronics, medicine, defense etc.

The ceramic materials are grouped by their chemical composition, as follows [21]:

- Oxides: MgO, CaO, Al_2O_3, SiO_2, TiO_2, Ag_2O etc.
- Carbides: SiC, WC, Al_4C_3, MoC etc.
- Fluorides: BeF_5, AlF_3, CeF_3, CrF_5, CuF, GaF_3 etc.
- Bromides: $BaBr_2$, $AlBr_3$, $(AuBr_3)_2$, LiBr etc.
- Chlorides: $AlCl_3$, BCl_3, CsCl, $CaCl_2$, $CoCl_2$, $GeCl_4$ etc.
- Iodides: BeI_2, AlI_3, CdI_2, AuI_3, KI etc.
- Other ceramics: Si_3N_4, CdSe, $SnSe_2$, ZnS, $Al_2Si_2O_5(OH)_4$ (kaolin).

Ceramic materials are suitable for various applications in car manufacturing industry due to their thermal, electrical, mechanical and tribological properties, as sensors, seals, bearings and valves. Ceramics offer a cost advantage over metals and greater durability than plastics, leading to their widespread use in the automotive industry. Generally, the ceramics, whose structure is made of ionic and covalent bonds, differ from metals in their properties. They are lightweight, chemically stable and possess high stiffness and refractoriness.

Regarding optical properties, the crystalline ceramics are typically opaque, whereas glassy (vitreous) ceramics are transparent. Light transmission in ceramics is affected by factors like grain size, porosity, and imperfections (Frenkel, Schottky and impurities). While nitrides, borides and carbides are inherently opaque due to their strong covalent bonding, they can become transparent as thin films. Oxide ceramics made with alkali metals, alkaline earth metals, silicon and aluminum should be transparent since they lack visible light absorption bands. However, they are usually opaque, because their grain boundaries scatter light. Reducing these grain boundaries can make these oxide ceramics transparent [22].

The ceramic materials can have very different electrical conductivities. Typically, they are insulators at room temperature, because their ionic and covalent bonds prevent free electrons from moving. However, temperature greatly affects this and some ceramics can become semiconductors or even superconductors at higher temperatures. A ceramic material's electrical conductivity at room temperature is influenced by the level of impurities and the concentration of point defects, such as vacancies [23]. In this case, the ceramics can act as *acceptor* or *donor* [24]. Some ceramics exhibit ionic conductivity, both at room and elevated temperatures, due to Frenkel and Schottky defects. These materials, like NaCl, CaF_2 and $SrTiO_3$, are known as *ionic conductors* or *solid electrolytes*. Electrically insulating ceramic materials at room temperature can become semiconductors when heated or exposed to a voltage above a critical threshold. Some ceramics, like MgO, BeO, ZrO_2, Al_2O_3, and CoO, are more sensitive to temperature changes and are used as *thermistors*. Others, like ZnO, are more sensitive to voltage and are used as *varistors*. Certain ceramics, including CrO_2, ReO_2, TiO, VO, $MoSi_2$ and LaB_6, are naturally conductive due to their unfilled *d* or *f* electron sublevels [25]. Additionally, transition metal borides, carbides and nitrides can also be highly conductive, if the ratio of non-metal to metal atoms is less than 0.59 [26]. Dielectric ceramics become polarized when they are exposed to an electric field or heat. Those polarized by an applied charge are *piezoelectric*, with PZT (lead zirconate titanate) being the most common used ceramic, though other materials like quartz and various titanates can also be used. Ceramics polarized by heating are *pyroelectric*. A subset of pyroelectrics, called *ferroelectrics*, exhibit permanent polarization and can have their polarization direction altered by an electric field. Ferroelectrics are categorized by their polarization direction: some ceramics as $PbTiO_3$ and $LiNbO_3$ polarize along a single axis, while others, such as $BaTiO_3$, $BaCoF_4$, and $NaNO_2$ polarize along two or three axes [25]. Ferroelectric ceramic materials are used in electronic applications for *capacitors*.

The ceramic electrical insulators or semiconductors exhibit magnetic properties. The most common and widely used magnetic ceramics are ferrites of which Fe_2O_3. There are three main forms of ferrites: spinel, garnet and hexagonal. Spinel ferrites, named for their structural similarity to the mineral spinel ($MgAl_2O_4$), have the general formula $MeO \cdot Fe_2O_3$, where Me represents a divalent metal ion such as manganese, magnesium, cobalt, zinc, nickel, cadmium, copper or iron. Excepting cobalt-based ferrites, spinel ferrites are magnetically *soft* (easy magnetization and demagnetization under an external magnetic field). The magnetite ($FeO \cdot Fe_2O_3$ or Fe_3O_4) is a type of spinel ferrite that can be permanently magnetized. The spinel ferrites can be used for transformer cores and electronic ignition systems.

The garnet ferrites are a class of materials with the chemical formula $X_3Y_2Si_3O_{12}$, where X is divalent metal ions as manganese (Mn^{2+}), magnesium (Mg^{2+}), calcium (Ca^{2+}) or iron (Fe^{2+}), while Y is trivalent metal ions as chromium (Cr^{3+}), aluminum (Al^{3+}) or iron (Fe^{3+}). Common examples include the naturally occurring minerals andradite ($Ca_3Fe_2Si_3O_{12}$), pyrope ($Mg_3Al_2Si_3O_{12}$) and spessartine ($Mn_3Al_2Si_3O_{12}$). However, the most widely known synthetic garnet ferrites are yttrium-iron garnet (YIG, $Y_3Fe_5O_{12}$) and neodymium-doped yttrium-aluminum garnet (YAG, Y3Al5O12). Hexagonal ferrites are a type of material with a hexagonal crystal structure. They are utilized in electronic devices for mobile and wireless communication, as well as in the creation of electromagnetic wave absorbers.

For Li-ion batteries with positive active material, it is used ceramics as $LiCoO_2$, $LiNiO_2$, $LiMn_2O_4$, $LiFeO_2$ or $LiFePO_4$, and, for the negative active material, it is used hard carbon or graphite [27].

The ceramics as alumina and Yttria Stabilized Zirconia (YSZ) maintain their shape under mechanical stress under high temperatures and chemical actions. For automotive manufacturing industry, YSZ is excellent ceramic for components like fuel injectors and durable engine seals. Also, the piezoelectric ceramic materials are used for sensors of monitoring systems as pressure, parking, lighting, acceleration, air bag initiation, liquid level and others [28].

The ceramic brakes often are made of silicon carbide (SiC) giving them increased rigidity and durability due to high mechanical strength, high corrosion and oxidation resistance and low friction coefficient. Also, it can be utilized for brake pad manufacturing other ceramics like alumina and boron carbide.

For car heat shields, it was used traditionally rigid steel, but in case of modern cars they also are produced from flexible aluminium due to insulating capabilities.

The ceramics are increasingly used in automotive engine components. These parts endure extreme stress from temperature changes, water exposure, and impacts, making them ideal candidates for high-performance materials. The ceramic materials offer superior heat insulation and wear resistance, withstanding high temperatures and pressures while remaining stable. Their lightweight and resistance to heat, wear and corrosion make them perfect for such demanding environments, often providing a solution, where traditional materials fall short. These materials help minimize thermal damage in engines, finding applications in combustion chamber components as cylinder liners and piston tops. The ceramic materials as silicon nitride (Si_3N_4) and silicon carbide (SiC) are used for automotive turbocharger rotor, bearings, wear-resistant surfaces etc. The honeycombs for catalytic converters of gasoline engine vehicles are formed from extruded cordierite $Mg_2Al_4Si_5O_{18}$ or $Fe_2Al_4Si_5O_{18}$ in order to reduce environmental pollution with emitted exhaust gases.

Glass

The glass is a ceramic material with an amorphous structure made of basic structural unit $[SiO_4]^{4-}$. It is obtained by the solidification of this oxide from the liquid state and exhibits a disordered arrangement of atoms similar to the liquid state. The ceramics with such a structure are also called *fused silica* or *vitreous ceramics*. The glass is used in various types of applications depending on the requirements. In industry of car manufacturing, it is used for windshields, which have to resist under harsh conditions and to support the car roof [29]. For car windshields, two types of glass are used:

- Laminated glass, which consists of two bonded glass sheets together by a polyvinyl butyral (PVB) plastic interlayer under high heat. These laminated glass windshields are used in the front and rear of the car. They provide a cushioning effect in cases of accidents and resist to a complete breakage under low velocity impact loading with rocks or pebbles, often sustaining only minor, repairable damage to the outer layer.
- Tempered glass, which is made by heating regular glass to a high temperature and then rapidly cooling, leading thus to strength increasing of 10 times stronger compared to standard glass. The tempered glass is used for car side windows. However, it cannot be repaired in case of impact damage.

Also, the glass is currently used in several car components, including navigation screens, backup camera lenses, mirrors and lamps.

1.4.3. Polymeric materials

Polymers can be grouped in various ways. This study focuses on classifying them based on their source and biodegradability. Using these criteria, polymers are divided into two groups:

▪Synthetic (conventional) polymers, derived from petroleum;

▪Natural polymers or biopolymers, derived from plants, animals, insects or microorganisms.

Car manufacturing industry use a wide variety of plastic components, from the dashboard and interior features like vents and handles, to safety equipment such as seatbelts and airbags [30]. Even under the hood, many smaller engine parts, like the oil dipstick handle, are plastic. The increasing use of plastics in car manufacturing, including structural and engine components, is driven by their lightweight.

Synthetic polymers

Generally, the synthetic polymers exhibit a wide range of diverse applications in all branches of industry. There are three groups of synthetic polymers in dependence of the state of the raw material, the isomeric configuration and the behavior at high temperatures:

❖ ***Thermoplastic polymers***. These polymers have a structure amorphous or semi-crystalline made of linear or branched molecular chains. They are recyclable and reusable, being able to be processed indefinitely under a lower temperature than that of their degradation. By heating, the thermoplastics soften and can be processed in this state through a variety of technological processes. The most common thermoplastic polymers are:

- *Polyethylene* (PE) is the most common plastic. It is made by linking together many ethylene (C_2H_4) molecules. The main types of PE can be classified by their density. *Low-density polyethylene* (LDPE) is produced at room temperature. It has a branched molecular structure, which does not allow macromolecules to form a crystalline structure. It is ductile, exhibiting low tensile strength but high resilience. *High-density polyethylene* (HDPE) is produced at high temperature (~ 200 °C) and high pressure (~10^3 atm.). It has a less branched structure compared to LDPE, is more rigid and more resistant to mechanical stress. PE is used in a huge variety of applications, particularly packaging like bags, films, bottles and containers. However, its weakness lies in its low hardness, strength and chemical resistance, making it unsuitable for most machine parts, but it can be used for bumper framework, upholstery, electrical components, liquid reservoirs and dashboard.
- *Polypropylene* (PP) is a low-density polymer made of the monomer C_3H_6. It exhibits three types of atomic arrangements: isotactic, syndiotactic and atactic [31]. The PP structure in commerce is usually made of a mixture of 75% isotactic and 25% atactic [32]. The atactic polypropylene is amorphous, and isotactic and syndiotactic polypropylene is semi-crystalline. It is rigid and tough, exhibits good resistance to chemicals, good wear resistance, creep resistance and has a low cost. The disadvantages of this polymer are thermo-oxidative degradation and high flammability [33]. In car industry, this polymer is used for bumpers, fuel systems, body panels, interior and exterior trim, electrical components, liquid reservoirs, carpets, seating, upholstery, dashboard etc.
- *Polystyrene* (PS) is another polymeric material, which has a higher density than PE and PP. This polymer is formed from C_8H_8 monomers called styrenes and can have the three types of atomic arrangements: isotactic, syndiotactic and atactic. Similar to polypropylene, atactic polystyrene has an amorphous state and isotactic and syndiotactic polystyrene have a semi-crystalline state. The rigidity and fragility of this polymer depend on the attachment direction of the phenyl group. Thus, in the case of random attachment of this group, the polystyrene becomes rigid and fragile. In car industry, this polymer is used for device covers, buttons and display on the dashboard [34].
- *Polymethyl methacrylate* (PMMA) is a transparent thermoplastic polymer, commonly known as *plexiglass* or *acrylic glass*. It is produced through the polymerization of methyl methacrylate ($C_5H_8O_2$). Similarly, it has three types of atomic arrangements: isotactic, syndiotactic and atactic. Atactic PMMA is the most frequently used in commerce. Generally, it is used the amorphous polymethyl methacrylate characterized by high rigidity and fragility similar to glass. It exhibits most of its properties close to those of chlorinated vinyl chloride (CPVC), but with lower density and impact resistance. The degradation temperature is higher than that of vinyls. Due to its transparency, hardness, rigidity and high resistance to ultraviolet radiation and harsh conditions, PMMA ideally replaces glass, being thus applied in the production

of light ceilings, car lenses, windscreens, covers of various lighting fixtures, window capping, optical fibers, bubble roofs, anti-mist panels, reflectors and others.

- *Polyvinyl chloride* (PVC) is a polymer with over 50% chlorine content [35] and is made by polymerizing vinyl chloride (C_2H_3Cl). It exists in rigid and flexible forms. Rigid PVC has three subtypes: Type I, Type II, and CPVC. Type II is less chemically resistant but more impact-resistant than Type I. CPVC offers greater high-temperature resistance. PVC maintains its strength, flexibility, and durability even at low temperatures and exhibits excellent chemical stability. It is readily weldable to other polymers [36]. Rigid PVC is used for items like bottles, windows, and boxes, while flexible PVC finds applications in packaging, films, industrial housings, labels and signs. Polyvinyl chloride used as a coating on a fabric base produces synthetic leather, which is widely used for car interior. Also, in vehicle industry, this polymer is used for cable insulation and sheathing, seating, toolbars, roof, doors, upholstery, interior trim, pipes, lining etc.
- *Polytetrafluoroethylene* (PTFE), also known as *Teflon*, is a heat-resistant and high-molecular-weight plastic. This linear, semi-crystalline polymer, formed by linking tetrafluoroethylene molecules (C_2F_4), is about 92-98% crystalline in its solid form. Its high operating temperature (around 260 °C), chemical inertness, minimal friction and resistance to abrasion make it ideal for two-layer non-stick coatings used on cookware [37]. PTFE's high crystallinity contributes to its high melting point (approximately 330 °C). Beyond non-stick cookware, PTFE is also used to protect containers and pipes from corrosion and chemicals and to manufacture machine parts as unlubricated brushes in brake, steering and clutch joints.
- *Polyethylene terephthalate* (PET), a stable polyester made of ethylene terephthalate ($C_{10}H_8O_4$), can be either amorphous or semi-crystalline depending on how it is made. Its wide range of uses, including packaging (especially bottles), machine parts and electrical insulation, stems from its stability across a broad temperature range (-60 °C to 220 °C), lightweight, chemical resistance, good barrier properties and strength. In car industry, this polymer is used for engine cover headlight brackets, interior trim, wiper arms, gearboxes and connector covers.
- *Polycarbonate* (PC) is made of repeating $C_{16}H_{14}O_3$ units and exhibits high strength, dimensional stability and chemical resistance. It maintains the toughness even at very low temperatures (down to around -100 °C) and possesses high mechanical resistance. Its exceptional transparency surpasses that of many glass types, making it suitable for a wide range of applications. These include roofing and attic panels, protective and greenhouse panels, bumpers, dashboard, lighting, windshields, windows, canopies, helmets, visors and many other engineering uses.
- *Acrylonitrile butadiene styrene* (ABS), a widely used amorphous copolymer, can be customized by adjusting the proportions of its constituent monomers. Acrylonitrile contributes chemical and weather resistance, hardness, shine and stiffness. Butadiene adds low-temperature flexibility, ductility and melt strength. Styrene enhances processability, gloss and hardness. A key application for ABS is in the automotive industry, where it is used to make parts like seating, interior and exterior trim, lighting, speaker covers, door handles and trim, dashboards, consoles, exterior components and electronic housings (e.g., for navigation systems) [38].

❖ ***Thermosetting polymers***. These polymers are also known as resins and form a rigid, interconnected network structure due to their molecular arrangement. Unlike thermoplastics, they cannot be melted and reused. Instead of softening when heated, thermosets decompose. They are known for their hardness, rigidity and superior resistance to high-temperature deformation, creep, abrasion and dimensional changes compared to thermoplastics. Common examples include phenolic resins, epoxies, unsaturated polyesters and polyamides. Because they are easy to process, thermosets are frequently used as the matrix material in composites. These materials typically consist of at least two components: a resin and a hardener. Mixing these components, it initiates solidification, which can occur at room temperature or higher, depending on the specific product. This solidification process, called polycondensation, creates a large, single-molecule-like structure with strong chemical bonds throughout. The final properties of the thermoset depend on factors like time, temperature and the use of catalysts during the manufacturing process. The most common thermosetting polymers are:

- *Epoxy resins* are versatile liquid plastics used extensively in engineering. These materials form a diverse group of polymers, customizable in terms of their mixing ratios, viscosity, reaction times and curing temperatures. Once cured, epoxies are typically strong, resistant to solvents, perform well under varying temperatures and adhere strongly to many materials like metals, glass, wood and ceramics. Their properties can be further tailored by adding other substances, resulting in materials ranging from flexible to extremely rigid and exhibiting excellent electrical, chemical and mechanical characteristics. While epoxies have numerous applications, including coatings, adhesives, electronic encapsulation, casting and flooring, their

most important use is as the matrix material in composite materials. These composites are crucial in manufacturing of automotive, aircraft, ships and sporting goods. In automotive industry, the epoxy systems are used for parts of chassis and frame, floor panels, seating, beams, roof, hood, doors, pillars, liquid reservoirs, leaf springs etc.

- *Polyurethane (PU)* is an elastomeric polymer and exhibits remarkable strength, flexibility and high resistance to wear and temperature extremes [34]. Its hardness can be varies from very soft to extremely rigid. Known for its exceptional durability, high load-bearing capacity and resistance to weathering, ozone, UV light, oil, gasoline and most solvents, polyurethanes are used in diverse applications such as flexible foam seating, insulation panels, hinges, cases, pillows, padding, electrical cable insulation and hard plastic parts.
- *Thermoset polyesters* are categorized by their structure into two types: alkyd and unsaturated. Alkyd polyesters, also known as glyptals, are used generally in paints and varnishes. Both types of thermoset polyesters possess a highly crosslinked structure, the density of which is determined by the number of branching sites available through unsaturation or multifunctionality [39]. Unsaturated polyesters (UP) are susceptible to degradation from oxidizing agents like concentrated sulfuric or nitric acid, particularly at elevated temperatures. Their resistance to harsh environments is generally poor due to the numerous ester bonds in their structure, which are prone to hydrolysis in hot acidic or alkaline conditions [40]. Despite this, polyester resins offer advantages such as water and weather resistance, resistance to aging and low cost. While they are less temperature resistant, mechanically strong and dimensionally stable than epoxies, their lower cost makes them a more economically viable option [41]. In vehicle manufacturing, the UP is used for body panels, bumper, hoods, pickup box, lighting and others.
- *Phenol formaldehyde* or *Bakelite* is a heat-resistant thermosetting polymer made by combining phenols and formaldehyde in a basic solution. It is often mixed with other materials like wood powder, mica, asbestos, graphite, glass fibers or nylon to enhance its electrical, thermal and mechanical properties. Known for its resistance to deformation under pressure (creep), Bakelite boasts high compressive strength and low cost. When combined with metal powders, asbestos or short glass fibers, it is used in car manufacturing parts like gears, brake linings and cams.
- *Polyamides* are classified as engineering polymers and are formed from diamines and dianhydrides. They possess high strength, thermal stability (above 500 °C), chemical resistance and mechanical strength, along with a low coefficient of thermal expansion and excellent dielectric properties [42]. Adding solid lubricants like graphite or molybdenum disulfide (MoS_2) can further enhance their friction resistance. Polyamides find applications in manufacturing of bearings, bushings, electrical insulators, sockets, transparent optical films, adhesives etc.

❖ ***Rubbers (elastomers)***. They are polymers with long, mostly linear molecular chains that are randomly cross-linked. These cross-links, held together by weak bonds, break and reform at room temperature, giving elastomers a "shape memory" (they return to their original form after stress is released). Elastomers can be thermosets, requiring vulcanization (a process using substances like sulfur or peroxides to create cross-links and improve elasticity) or thermoplastics, which do not require vulcanization and combine the properties of thermoplastics with elasticity. Vulcanization can be done with heat or at room temperature. Rubber is essential in car manufacturing. Its flexibility, vibration absorption and electrical insulation properties make it ideal for various applications. In automotive industry, rubber is commonly found in inner tubes, diaphragms, gaskets and hose linings. Both natural and synthetic rubber are used in components like tires, grommets, spring shackle bushes, bump rubbers, pedal rubbers, fan belts, vibration dampers, high tension lead insulation, suspension units and flexible pipes. Hard rubber is also used for battery cases. The most common rubbers are:

- *Polyisoprene* or *natural rubber* is made of long, randomly tangled and flexible molecular chains, and can stretch significantly. However, in its raw form, it does not fully return to its original shape after being stretched too far, due to molecules sliding past each other. The vulcanization creates crosslinks between these chains, preventing this slippage. These crosslinks do not change the random arrangement or flexibility of the molecules, allowing the rubber to stretch and then recover its shape. Natural rubber is used to make both soft and hard rubber. Soft rubber, while easy to work with, has poor chemical resistance. It is useful for applications like linings where abrasion is a concern, but harsh chemicals are not. Common uses include tires, bushings, gaskets etc.
- *Polybutadiene* or *synthetic rubber* is created by linking together many molecules of 1.3-butadiene (C_4H_6) using a metal as catalyst. This rubber is very similar to natural rubber and can often be used in its

place. It is used in the production of tires, caps for closing hoses etc. and as filler for other polymeric materials to improve their mechanical properties.

- *Polychloroprene* or *neoprene*, a synthetic rubber, is made by linking together chloroprene monomers (C_4H_5Cl). It is very stable and flexible even at high temperatures. Its versatile nature comes from its well-balanced physical and mechanical properties. Neoprene exhibits high resistance to fats, oils, waxes, water, ozone, weathering and temperatures between -50 and 120 °C. While it handles high temperatures better than natural rubber, neoprene is not as strong or as flexible at low temperatures. It is used in many products, including electrical insulators, gaskets, hoses, adhesive tapes etc.
- *Styrene-butadiene rubber* (SBR) is a synthetic rubber made by combining styrene and 1.3-butadiene monomers. It is a thermoplastic styrenic copolymer, meaning it is made of distinct polystyrene (hard) blocks and polybutadiene (flexible) blocks. These blocks are incompatible, resulting in a structure where polystyrene domains are dispersed throughout a polybutadiene matrix. The ratio of styrene to butadiene determines the rubber's properties. Higher styrene content makes the rubber harder and more thermoplastic. SBR is generally transparent and impact-resistant [43]. It offers a better abrasion and heat resistance than natural rubber, but lower fatigue resistance and reduced flexibility and tensile strength at low temperatures. Like other rubbers, SBR resists water, acids and alcohols. It is commonly used in tires, gaskets, belts, hoses, electrical insulation and various molded and extruded products.
- *Silicone rubber* is a flexible material made from silicon, oxygen, carbon and hydrogen. It is created by hardening silicon through vulcanization or catalysis. This rubber is known for its ability to remain flexible in cold temperatures and withstand high temperatures. It is a good insulator of both electricity and heat and combines elasticity with temperature resistance. However, it can degrade over time and with environmental exposure. Silicone rubber is used in many products, including electrical and thermal insulation, seals, gaskets, key and remote buttons, hoses etc.

Biopolymers

The massive use of synthetic plastics has created a global waste crisis. Scientists are exploring biopolymers, derived from natural sources like plants, animals, insects, and microbes, as a solution. These bioplastics can be biodegradable, breaking down into biomass by microorganisms, though this depends on factors like chemical makeup and molecular structure, not just the natural origin. While most natural polymers are biodegradable and compostable, even those from 100% renewable resources are not always. Biopolymers offer environmental advantages but have limitations in areas like strength and barrier properties, which can be improved with biodegradable additives. There are three main groups of biopolymers based on production methods using renewable resources:

- *Natural biopolymers*. These bioplastic materials can be produced from polysaccharides, such as starch (corn, potato, rice, wheat etc.), cellulose (wood, straw, cotton fibers etc.), chitin and chitosan, lignin and proteins (collagen and gelatin).
- *Microbial biopolymers*. Polyhydroxyalkanoates (PHAs) are a type of biopolymer (natural polyesters) produced by microorganisms through bacterial fermentation. This process can utilize various renewable waste materials like agricultural, cellulosic, organic and municipal solid waste, as well as sugars and lipids. PHAs are naturally biodegradable, biocompatible and thermoplastic polyesters with applications in food packaging, containers, fibers, films and coatings. While PHA films offer good gas barrier properties and UV resistance, they are less resistant to acids and bases. In car manufacturing industry, PHAs can be used for dashboard, electrical connectors, wiring supports, upholstery, seating, bumper components, safety cushions and others [44].
- *Conventional (synthetic) biopolymers*. These bioplastic materials produced synthetically from renewable natural sources includes natural polyesters PLA, PBS, PCL etc. and thermoplastic natural polymers bio-PE, bio-PET, bio-PTT, bio-PP, bio-PS etc., which have properties similar to thermoplastic polymers of petroleum origin with the same name.

The most common biopolymers used in car manufacturing industry are:

- *Starch-based polymers (TPS - thermoplastic starch)* are natural, semi-crystalline bioplastics made of amylose and amylopectin, typically derived from potatoes, but also other sources like corn, wheat or rice. The ratio of amylopectin (70-90%) to amylose (10-30%) varies depending on the source plant. Starch granules contain both amorphous (amylose) and crystalline (amylopectin) regions. While insoluble in water, starch creates a viscous mixture, making it useful as a stabilizer, gelling agent and water-retaining agent in various industries, particularly food packaging. A key drawback of TPS is retrogradation, a process where crystallinity increases over time, making the material brittle. To prevent this and improve strength, flexibility

and water resistance, it is added plasticizers, composite materials are created or chemical modifications are performed. These modifications, such as replacing hydroxyl groups with ether or ester groups, reduce the hydrophilicity that causes rapid disintegration in water. Compared to cellulose-based polymers, TPS has lower crystallinity, higher density than synthetic thermoplastics and inferior mechanical properties [45].

- *Cellulose-based polymers* are created by dissolving chemically treated cellulose pulp (like cellulose xanthate) to produce regenerated cellulose (cellophane and rayon) or cellulose acetate, used in products like films, membranes and eyeglass frames [46]. Different from starch-based polymers, these polymers have a linear structure with glucose units linked by β-1.4-glycosidic bonds, resulting in higher crystallinity. While strong and tough, their processability is limited, though this can be improved through chemical modification, adding plasticizers, or creating composites with other polymers. Bacteria can also produce cellulose, which is very pure and strong, suitable for high-strength applications. However, its high cost restricts its use. Bacterial cellulose is used in packaging, acoustic diaphragms, paints and adhesives [47].
- *Polylactic acid (PLA)*, a natural biodegradable plastic made from renewable resources like corn starch, is a type of aliphatic polyester. Its building block, lactic acid, is produced by fermenting plant-based materials. PLA can range from amorphous to highly crystalline, affecting its properties. While PLA's mechanical properties are comparable to common petroleum-based plastics (like PE, PET, PS and PP), making it a potential substitute, its lower heat resistance (around 60 °C) is a limitation. However, PLA offers advantages like good transparency, gloss, rigidity and processability. It is commonly used in food packaging, tapes, films, fibers and 3D printing filaments.
- *Polybutylene succinate (PBS)* is a biodegradable plastic made from either petroleum or renewable resources. It is similar to common plastics like PE, PET and PP, and is made by combining succinic acid and 1.4-butanediol. These components can be derived from petroleum or created through bacterial fermentation of natural materials. PBS is semi-crystalline polyester with a higher melting point than polylactic acid. Its heat and mechanical properties are related to its crystallinity. Because it is chemically and thermally resistant and easily melted and processed, PBS is used in packaging, textiles (yarns and filaments) and injection molding for various plastic products.
- *Polycaprolactone* (PCL) is a semi-crystalline, biodegradable polyester with a relatively low melting point (60 °C) and a very low glass transition temperature (-60 °C) [48]. Created by ring-opening polymerization of ε-caprolactone, high molecular weight PCL resembles polyethylene in its mechanical properties. Its flexibility and ease of processing at temperatures below 200 °C (without breakdown) make it suitable for creating fibers and films. However, its low melting point restricts its applications. Therefore, PCL is often blended with other polymers like polyethylene, polypropylene or starch to create composite materials with tailored properties [49]. Its biodegradability, chemical resistance, solvent resistance, and good mechanical properties make it useful in packaging applications.
- *Bio-polyethylene (Bio-PE)* is a plant-based plastic that is chemically, thermally and mechanically almost identical to regular petroleum-based PE. It is made from ethylene, which is produced by fermenting renewable resources like sugarcane, beets, wood, corn, wheat, rice and other plant waste. Bio-PE can be used in place of conventional PE for any application
- *Bio-polyvinyl chloride (Bio-PVC)* is a natural, non-biodegradable thermoplastic, much like traditional petroleum-based PVC. It is made up of 43% bioethanol-derived ethylene and 53% chlorine [45]. Because its structure and properties are so close to those of conventional PVC, bio-PVC can be used in place of regular PVC for any application.
- *Bio-polyethylene terephthalate (Bio-PET)*, a type of polyester, is a non-biodegradable thermoplastic made from sugar-derived monoethylene glycol and either sugar- or petroleum-derived terephthalic acid (or its dimethyl ester form). While not fully bio-based due to the potential petroleum origin of terephthalic acid, it mimics the structure and performance of traditional PET, making it suitable for identical applications. Its excellent moisture and water resistance make it ideal for beverage bottles.
- *Bio-Polytrimethylene terephthalate (Bio-PTT)* is a synthetic thermoplastic polyester, similar to PET, known for its strength and resistance to wear. It is produced through a polycondensation reaction and is widely used in the textile industry for its excellent mechanical properties.

In car manufacturing industry, all these biopolymers can be used for dashboard components, upholstery, interior trim, electronic parts, headliners, trunk linings, fuel lines and tanks, cable and housing insulation, floor mats, covering and others [50].

1.4.4. Natural materials

The most common natural materials used in manufacturing of automotive parts are wood, leather, natural fibers, natural rubber and biopolymers.

The ***wood*** is often used in manufacturing of automobiles for interior components and decoration for aesthetic reasons: dashboard trim, center console, door panel, steering wheel and shift knob. The most common woods used for car interior parts are mahogany, walnut, maple, ash, oak, cherry, aspen, elm, sapele and bamboo.

The ***real leathers*** are made from animal hides. There are several grades of leather. *Genuine leather* is a product containing at least 20% leather, often made from multiple layers of lower-quality leather derived from animal skin bonded together. *Top grain leather* is created by splitting and refining a hide, then giving it a new surface texture specially processed for durability in vehicles. Usually, the top grain leather is used for car interior. *Full grain leather* is the highest quality, retaining the original grain and imperfections, but is generally not used in cars due to its high cost. The most popular types of real leather are cowhide, buffalo, crocodile, deer and Nappa leather (calves, lambs and goats). The leathers are used typically for car interior parts as upholstery, dashboard, steering wheel, shift knob, center console, door panels and seating.

The ***natural vegetable fibers*** often used in the automotive industry are kenaf, hemp, flax, jute, banana, sisal etc. as sustainable alternatives for glass fibers. These fibers usually are used for door panels, trunk panel, upholstery, seating, covers etc.

1.4.5. Composite materials

The composite materials are made of two components: basic component as *matrix* that provides the final shape and dimensions and filling component as reinforcement (short fibers, long fibers and fabrics) or additives (different powders) that provides stability to the matrix. Composites can be classified according to the nature of the matrix:

- Composites with metallic matrix (steel alloys, aluminum, magnesium, titanium etc.);
- Composites with ceramic matrix (oxides, silicon carbide and carbon);
- Composites with polymeric matrix (thermoplastic, thermosetting and rubber).

In dependence of filling component, the composites can be grouped:

- Reinforced composites;
  - with long fibers (woven or non-woven);
  - with short fibers or whiskers (aligned or randomly oriented);
- Additive or filled composites (powder).

Also, in dependence of structure, the composites can be classified [51]:

- Fibrous composite materials – reinforced with short fibers;
- Laminated composite materials – consisting of different layers (lamina) made of fabrics or plies of unidirectional long fibers immersed in matrix;
- Particulate composite materials – consisting of matrices filled with various powders;
- Combinations of the above.

Metal matrix composites (MMCs) are used in car manufacturing for various components due to their lightweight nature, high strength, wear resistance and durability. They are used for engine blocks, cylinder heads, pistons, brake rotors, calipers, chassis components, suspension arms, body panels and others. In the automotive manufacturing industry, aluminum and magnesium are most commonly used for the metal matrix of these composites.

Aluminum matrix composites (AMCs) are increasingly popular lightweight materials in the automotive industry due to their low density, corrosion resistance and suitability for large-scale casting. These properties make them ideal for various vehicle components, from body panels and chassis to engine parts and braking systems [52]. Compared to traditional steel, AMCs offer better fuel efficiency and safety by reducing weight and improving corrosion resistance. They also offer advantages over conventional engine materials by increasing thermal conductivity and strength, leading to improved performance and reduced emissions. In suspension and braking systems, AMCs offer better corrosion resistance and fatigue durability than steel, improving handling and comfort. Their flexibility allows for complex designs, meeting aesthetic demands. However, the high cost of manufacturing, limited heat and abrasion resistance and low recyclability are significant challenges that need to considered.

Magnesium matrix composites (MMCs), also, is used in automotive industry due to their lightweight and improved mechanical properties by addition of fillers (silicon carbide, aluminum oxide or graphite) or

reinforcements (carbon fibers) [53]. The MMCs can effectively replace steel and aluminum in various car parts (engine, wheels, radiator, bumper, brakes, shock absorbers etc.), leading to improvements in hardness, wear and corrosion resistance, tensile strength and fatigue life. Using MMCs in vehicles offers several benefits, including lighter weight for better fuel efficiency and performance, which in turn helps reduce emissions and energy consumption. Additionally, MMCs can improve vehicle lifespan due to their resistance to corrosion, harsh weather and impacts.

Also, ***ceramic matrix composites*** (CMCs) are becoming more common in car manufacturing, particularly for components needing strength, heat resistance and lightweight. These composites, which use materials like oxides, silicon carbide (SiC), or carbon as matrix, are currently being used to make engine parts (valves, turbines), exhaust and intake systems and brake parts [54].

Polymer matrix composites (PMCs) are increasingly used in automobile construction due to weight reduction, parts consolidation, design flexibility, corrosion resistance and good mechanical properties [55]. However, their widespread is limited due to high component (polymer or reinforcement) costs, slow production, and recyclability concerns. As polymeric matrix, it is used thermoplastic (PE, PP) and thermosetting (epoxy systems, polyester and vinyl ester). Types of PMCs used in car manufacturing are the composites reinforced with carbon fibers, glass fibers and natural fibers.

Carbon fiber reinforced polymers (CFRP) are used in a variety of automotive components, such as the exterior panels, roof cover, trunk lid, wheel rims, cabin, floor, roof, pillars, hood, bumpers, instrument panel, and inner door modules [56]. These composites are used for sport and luxury cars due to high cost.

The glass fiber reinforced polymeric composites (GFRP) are the most common type used in the automotive industry due to lower cost as compared to CFRP, good strength and stiffness. They can be used to produce car doors, bumpers, side skirts, roofs, dashboards, seat frames, hoods and intake manifolds.

Currently, natural fiber reinforced composites (NFRC) are used for dashboards, door panels and seating due to renewable, lightweight, good mechanical properties and eco-friendly fibers. As reinforcement for these composites are used kenaf, hemp, jute, sisal or flax.

1.4.6. Material selection for automotive parts

In car manufacturing industry, the materials are selected by balancing consumer preferences with regulations, prioritizing lightweight, fuel-efficient, environmentally friendly and cost-effective choices [56]. Future material innovations will aim to further reduce fuel consumption, streamline recycling, and lower expenses. Material selection is driven by various factors, from enhancing existing vehicle performance, cost-effectiveness, reliability and weight, to choosing materials for entirely new models. For car components, it is utilized a wide range of materials like steel, aluminium, magnesium, titanium, glass, ceramics, plastics and composites. For car bodies, key factors include thermal, chemical, and mechanical strength, manufacturability, durability, cost and availability. The industry is showing growing interest in lightweight, robust, and cleaner materials such as composites, for example, due to their energy efficiency.

The key factors considered by car manufacturers in material selection are [57]:

- Lightweight – the reduction of emissions and improvement of fuel efficiency;
- Economic effectiveness – the impact of material cost on consumer affordability;
- Safety – the capacity of material to absorb impact energy and to protect passengers;
- Recyclability – the resource conservation and the recycling possibilities.

The vehicle weight reduction can be achieved by [57]:

-Substituting heavy materials with lighter alternatives;

-Optimizing component design to reduce weight without affecting performance;

-Optimizing processes of manufacturing.

The material selection criteria in the design phase are [58]:

1. The *resistance criterion* takes into account the characteristics and nature of the stresses that occur in the part during operation (Figure 1.4.2). Therefore the material is selected in dependence of the resistance to static loadings (tensile, compression, bending, shear and/or torsion), fatigue resistance, failure resistance, wear resistance and others.

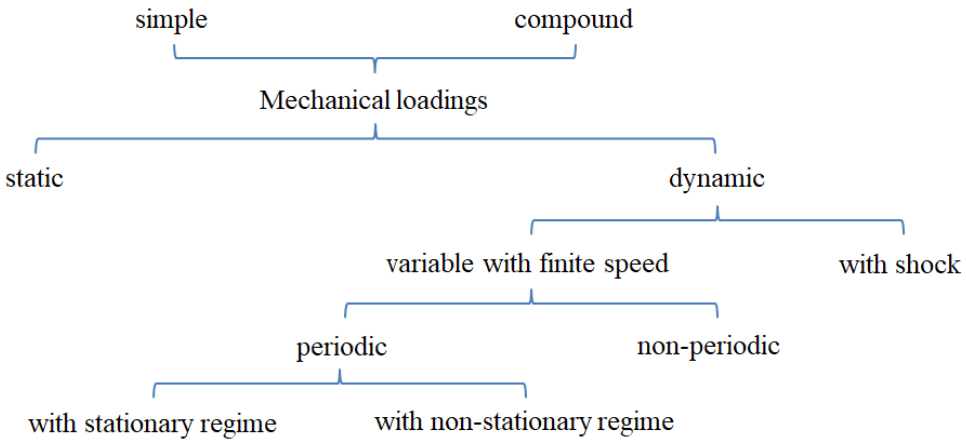

Figure 1.4.2 - Types of mechanical loadings [58].

If the designed part will be subjected to variable loads, knowing the resistance to static loads is not enough. In these cases, it is necessary to choose a material with a higher fatigue resistance than the calculated one. Also, in the part design stage, it will be taken into account that the fatigue resistance in the surface layers can be improved by applying thermal and mechanical treatments, by appropriate technological processing and by optimizing the shape.

2. The *working environment criterion* refers to temperature, humidity, electrochemical activity and particulate contamination. Corrosion resistance is principal in corrosive environments, achieved through inherent material properties or surface treatments. Creep-resistant or refractory materials address high-temperature applications, while face-centered cubic structured materials are preferred for cryogenic conditions.

3. The *technological criterion* refers to car part shape, number of pieces and manufacturing processes.

4. The *economic criterion* concerns the cost of materials, manufacturing technology, and operation.

References

1. Lyon, S. B. (2010). Corrosion of Carbon and Low Alloy Steels. In *Shreir's Corrosion* (pp. 1693–1736). Elsevier. https://doi.org/10.1016/B978-044452787-5.00190-6

2. Carvill, J. (1997). *Mechanical engineer's data handbook* (Reprinted.). Oxford: Butterworth-Heinemann.

3. Okon Essien, E., & Udoudo, N. (2023). Engineering materials and automobile construction. *International Journal of Advancement in Education, Management, Science and Technology*, *6*(1), 46–60.

4. Bunea, M., & Circiumaru, A. (2021). *Studiul materialelor* (Vol. 1). Galati: InfoRapArt.

5. Reimpell, J., Stoll, H., & Betzler, J. W. (2001). *The Automotive chassis: engineering principles* (2nd ed.). Oxford: Butterworth-Heinemann.

6. Uijl, N. J. D., & Carless, L. J. (2012). Advanced metal-forming technologies for automotive applications. In *Advanced Materials in Automotive Engineering* (pp. 28–56). Elsevier. https://doi.org/10.1533/9780857095466.28

7. Narang, G. B. S. (1995). *Automobile Engineering* (5th ed.). Khanna Publishers.

8. Papavinasam, S. (2014). Materials. In *Corrosion Control in the Oil and Gas Industry* (pp. 133–177). Elsevier. https://doi.org/10.1016/B978-0-12-397022-0.00003-0

9. Rundman, K. B. (2001). Cast Irons. In *Encyclopedia of Materials: Science and Technology* (pp. 1003–1010). Elsevier. https://doi.org/10.1016/B0-08-043152-6/00186-8

10. Maharnwar, A., Nair, S., & Dolas, D. (2016). Comparative study of different materials used for manufacturing of an automobile body. *International Journal of Advanced Engineering Research and Science*, *3*(3), 9–13.

11. Miller, W. S., Zhuang, L., Bottema, J., Wittebrood, A. J., De Smet, P., Haszler, A., & Vieregge, A. (2000). Recent development in aluminium alloys for the automotive industry. *Materials Science and Engineering: A*, *280*(1), 37–49. https://doi.org/10.1016/S0921-5093(99)00653-X

12. Chen, J. (2023). Research on Aluminum Alloy Materials and Application Technology for Automotive Lightweighting. *Academic Journal of Materials & Chemistry*, *4*(6), 1–7. https://doi.org/10.25236/AJMC.2023.040601

13. Pervaiz, M., Panthapulakkal, S., Kc, B., Sain, M., & Tjong, J. (2016). Emerging Trends in Automotive Lightweighting through Novel Composite Materials. *Materials Sciences and Applications*, *07*(01), 26–38. https://doi.org/10.4236/msa.2016.71004

14. Choudhary, C., Sahoo, K. L., & Mandal, D. (2018). Microstructure and mechanical properties of Al-Si alloys processed by strain induced melt activation. *Materials Today: Proceedings*, *5*(13), 27107–27111. https://doi.org/10.1016/j.matpr.2018.09.017

15. Anantha Padmanaban, D., & Kurien, G. (2012). Silumins: The Automotive Alloys. *AM&P Technical Articles*, *170*(3), 28–30. https://doi.org/10.31399/asm.amp.2012-03.p028

16. Zhu, G. L., Gu, N. J., & Zhou, B. J. (2017). Effects of Combining Na and Sr additions on Eutectic Modification in Al-Si alloy. *IOP Conference Series: Materials Science and Engineering*, *230*, 012015. https://doi.org/10.1088/1757-899X/230/1/012015

17. Musfirah, A. H., & Jaharah, A. G. (2012). Magnesium and Aluminum Alloys in Automotive Industry. *Journal of Applied Sciences Research*, *8*(9), 4865–4875.

18. Liu, B., Yang, J., Zhang, X., Yang, Q., Zhang, J., & Li, X. (2023). Development and application of magnesium alloy parts for automotive OEMs: A review. *Journal of Magnesium and Alloys*, *11*(1), 15–47. https://doi.org/10.1016/j.jma.2022.12.015

19. Pázmán, J. (2024). Development of Aluminum and Copper Alloys for Electric Automotive Engines—From the Research Work at the University of Dunaújváros. In *SMTS 2024* (p. 89). Presented at the SMTS 2024, MDPI. https://doi.org/10.3390/engproc2024079089

20. Furuta, T. (2019). Automobile applications of titanium. In *Titanium for Consumer Applications* (pp. 77–90). Elsevier. https://doi.org/10.1016/B978-0-12-815820-3.00006-X

21. Bunea, M., & Circiumaru, A. (2021). *Studiul materialelor* (Vol. 2). Galati: InfoRapArt.

22. Salmang, H., & Scholze, H. (1982). *Keramik: Teil 1: Allgemeine Grundlagen und wichtige Eigenschaften* (Sechste, verbesserte und erweiterte Auflage.). Berlin, Heidelberg: Springer Berlin Heidelberg. https://doi.org/10.1007/978-3-642-47491-0

23. Abdullah, K. A. L., Termanini, M. D., & Omar, F. A. (2012). Effect of Impurities and Temperature on Electrical Properties of ZnO-Based Varistors. *Energy Procedia*, *18*, 867–878. https://doi.org/10.1016/j.egypro.2012.05.101

24. Bengisu, M. (2001). *Engineering ceramics*. Berlin, [Germany]: Springer.

25. Richerson, D. W. (2006). *Modern ceramic engineering: properties, processing, and use in design* (3rd ed.). Boca Raton, FL: CRC Taylor & Francis.

26. Wang, C. C., Akbar, S. A., Chen, W., & Patton, V. D. (1995). Electrical properties of high-temperature oxides, borides, carbides, and nitrides. *Journal of Materials Science*, *30*(7), 1627–1641. https://doi.org/10.1007/BF00351591

27. Somiya, S. (2013). *Handbook of Advanced Ceramics*. Elsevier. https://doi.org/10.1016/C2010-0-66261-4

28. List of Areas Where Ceramic Materials are Used in the Automotive Industry. (n.d.). Retrieved from https://www.preciseceramic.com/blog/areas-where-ceramic-materials-are-used-in-the-automotive-industry.html

29. Mishra, A. (2020). Automotive Materials: An Overview. *International Research Journal of Engineering and Technology*, *7*(8), 4852–4857.

30. George, P. E. (n.d.). Top 5 Materials Used in Auto Manufacturing. Retrieved from https://auto.howstuffworks.com/under-the-hood/auto-manufacturing/5-materials-used-in-auto-manufacturing.htm#pt2

31. Koerner, G. R., & Koerner, R. M. (2018). Polymeric Geomembrane Components in Landfill Liners. In *Solid Waste Landfilling* (pp. 313–341). Elsevier. https://doi.org/10.1016/B978-0-12-407721-8.00017-6

32. Crawford, C. B., & Quinn, B. (2017). Physiochemical properties and degradation. In *Microplastic Pollutants* (pp. 57–100). Elsevier. https://doi.org/10.1016/B978-0-12-809406-8.00004-9

33. Shanmuganathan, K., & Ellison, C. J. (2014). Layered Double Hydroxides. In *Polymer Green Flame Retardants* (pp. 675–707). Elsevier. https://doi.org/10.1016/B978-0-444-53808-6.00020-2

34. Knapčíková, L., Behúnová, A., & Behún, M. (2016). MATERIAL AND ECONOMICAL ASPECT OF SOME PLASTICS USING IN AUTOMOTIVE INDUSTRY. *Acta Tecnología*, *2*(4), 7–10. https://doi.org/10.22306/atec.v2i4.17

35. Vesterberg, A., Hedenmark, M., & Vass, A.-M. (2005). *PVC in medical devices: An inventory of PVC and phthalates containing devices used in health care*. Retrieved from https://noharm.org/sites/default/files/lib/downloads/pvc/PVC_Med_Devices_Karolinska.pdf

36. McKeen, L. W. (2014). Plastics Used in Medical Devices. In *Handbook of Polymer Applications in Medicine and Medical Devices* (pp. 21–53). Elsevier. https://doi.org/10.1016/B978-0-323-22805-3.00003-7

37. McKeen, L. W. (2016). Liquid Formulations. In *Fluorinated Coatings and Finishes Handbook* (pp. 147–170). Elsevier. https://doi.org/10.1016/B978-0-323-37126-1.00009-6

38. Pious, C. V., & Thomas, S. (2016). Polymeric Materials—Structure, Properties, and Applications. In *Printing on Polymers* (pp. 21–39). Elsevier. https://doi.org/10.1016/B978-0-323-37468-2.00002-6

39. Campbell, R. W. (2001). Polyesters. In *Encyclopedia of Materials: Science and Technology* (pp. 7171–7172). Elsevier. https://doi.org/10.1016/B0-08-043152-6/01271-7

40. Wang, R.-M., Zheng, S.-R., & Zheng, Y.-P. (2011). Matrix materials. In *Polymer Matrix Composites and Technology* (pp. 101–548). Elsevier. https://doi.org/10.1533/9780857092229.1.101

41. Campbell, F. C. (2004). Commercial Composite Processes: These Commercial Processes Produce Far More Parts than the High-performance Processes. In *Manufacturing Processes for Advanced Composites* (pp. 399–438). Elsevier. https://doi.org/10.1016/B978-185617415-2/50012-5

42. McKeen, L. (2012). Polyimides. In *The Effect of Sterilization on Plastics and Elastomers* (pp. 169–182). Elsevier. https://doi.org/10.1016/B978-1-4557-2598-4.00006-X

43. McKeen, L. (2012). Styrenic Plastics. In *The Effect of Sterilization on Plastics and Elastomers* (pp. 85–132). Elsevier. https://doi.org/10.1016/B978-1-4557-2598-4.00004-6

44. PHA for the Automotive Industry. (n.d.). Retrieved from https://pha-sourcing.com/applications/automotive/

45. Shen, L., Haufe, J. I., & Patel, M. (2009). Product Overview and Market Projection of Emerging Bio-Based Plastics-PRO-BIP 2009–Final Report.

46. Bajpai, P. (2018). Wood and Fiber Fundamentals. In *Biermann's Handbook of Pulp and Paper* (pp. 19–74). Elsevier. https://doi.org/10.1016/B978-0-12-814240-0.00002-1

47. Babu, R. P., O'Connor, K., & Seeram, R. (2013). Current progress on bio-based polymers and their future trends. *Progress in Biomaterials*, *2*(1), 8. https://doi.org/10.1186/2194-0517-2-8

48. McKeen, L. W. (2013). Introduction to Use of Plastics in Food Packaging. In *Plastic Films in Food Packaging* (pp. 1–15). Elsevier. https://doi.org/10.1016/B978-1-4557-3112-1.00001-6

49. Jiang, L., & Zhang, J. (2013). Biodegradable Polymers and Polymer Blends. In *Handbook of Biopolymers and Biodegradable Plastics* (pp. 109–128). Elsevier. https://doi.org/10.1016/B978-1-4557-2834-3.00006-9

50. Will bioplastics replace traditional plastics in the automotive industry? (2024, July 23). Retrieved from https://knaufautomotive.com/will-bioplastics-replace-traditional-plastics-in-the-automotive-industry/

51. Cîrciumaru, A. (2013). *Proiectarea, formarea şi caracterizarea materialelor compozite cu matrice polimerică: note de curs*. Galaţi: Europlus.

52. Wu, X., & Zhang, W. (2024). A review on aluminum matrix composites' characteristics and applications for automotive sector. *Heliyon*, *10*(20), e38576. https://doi.org/10.1016/j.heliyon.2024.e38576

53. Arangarajan, M., Kaliappan, S., Jayaraman, P., Arun Kumar, A. L. N., Arulmurugan, S., & Maranan, R. (2024). Optimizing Mechanical Properties of Magnesium Matrix Composites via Stir Casting for Automobile Applications. *E3S Web of Conferences*, *556*, 01026. https://doi.org/10.1051/e3sconf/202455601026

54. Stojanovic, B., & Glisovic, J. (2021). Application of Ceramic Matrix Composite in Automotive Industry. In *Encyclopedia of Materials: Composites* (pp. 275–292). Elsevier. https://doi.org/10.1016/B978-0-12-819724-0.00018-5

55. Ghassemieh, E. (2011). Materials in Automotive Application, State of the Art and Prospects. In M. Chiaberge (Ed.), *New Trends and Developments in Automotive Industry*. InTech. https://doi.org/10.5772/13286

56. Fentahun, M. A., & Savaş, M. A. (2018). Materials Used in Automotive Manufacture and Material Selection Using Ashby Charts. *International Journal of Materials Engineering*, *8*(3), 40–54. https://doi.org/10.5923/j.ijme.20180803.02

57. Todor, M. P., & Kiss, I. (2016). Systematic approach on materials selection in the automotive industry for making vehicles lighter, safer and more fuel–efficient. *Applied Engineering Letters*, *1*(4), 91–97.

58. Palade, V., & Diaconu, N. (2009). *Organe de masini*. Galati University Press.

1.5 Interchangeability and technical measurements

1.5.1 Types of products and their structure

In accordance with DSTU 3321:2003 ***A PRODUCT*** is any item or set of items that must be manufactured at an enterprise.

Depending on their purpose, products are divided into products of primary production (products intended for sale) and auxiliary production (products intended for the enterprise's own needs).

The following types of products are installed:

1) details;
2) assembly units;
3) complexes;
4) sets.

Depending on the presence or absence of component parts in the products, they are divided into:

a) details – do not have component parts;
b) assembly units, complexes, kits – which consist of two or more components.

The types and structure of products are shown in Fig. 1.5.1.

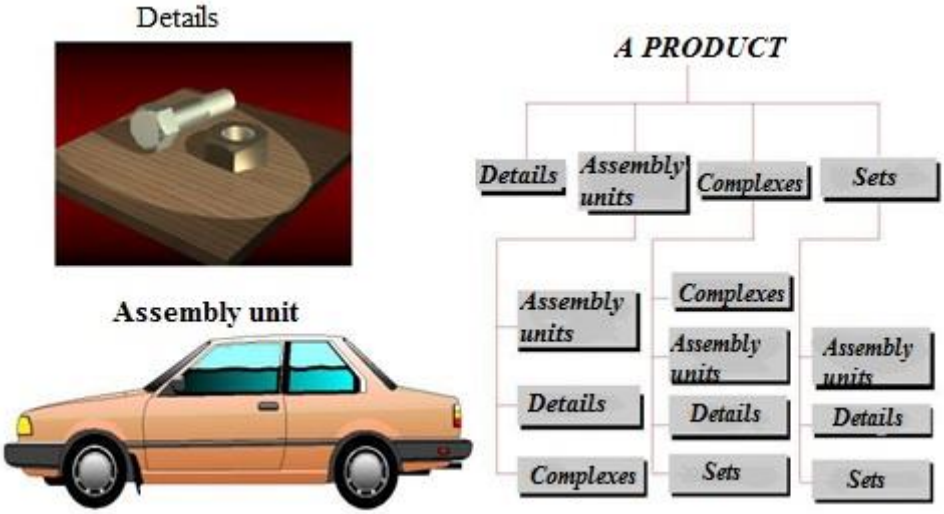

Figure 1.5.1 – Types and structure of products

A PART is a product made of a homogeneous material without the use of assembly operations.

ASSEMBLY UNIT is a product whose components are connected together at the enterprise through assembly operations (twisting, riveting, welding, etc.), for example: a car, a machine tool, a flywheel made of plastic with metal reinforcement, etc.

A COMPLEX is two or more products that are not connected at the manufacturing plant by assembly operations, but are intended to perform interrelated operational functions, for example: a ship, a ventilation unit, a drilling rig.

A SET is two or more products that are not connected at the manufacturing enterprise by assembly operations and represent a set of products that have a common operational purpose of an auxiliary nature, for example: a set of spare parts, a set of tools for a car, etc.

1.5.2 Types and completeness of design documents

Any products can be manufactured only on the basis of certain design documents. Design documents include graphic and textual documents that define the components of the product and carry the necessary information regarding its development, manufacture, control, operation and repair.

Graphic documents include various types of drawings and diagrams. They carry the necessary graphic information about the product.

Graphic documents are divided into the following types:

DRAWING DETAILS – a document that includes an image of the part and other data necessary for its manufacture and control (Fig. 1.5.2).

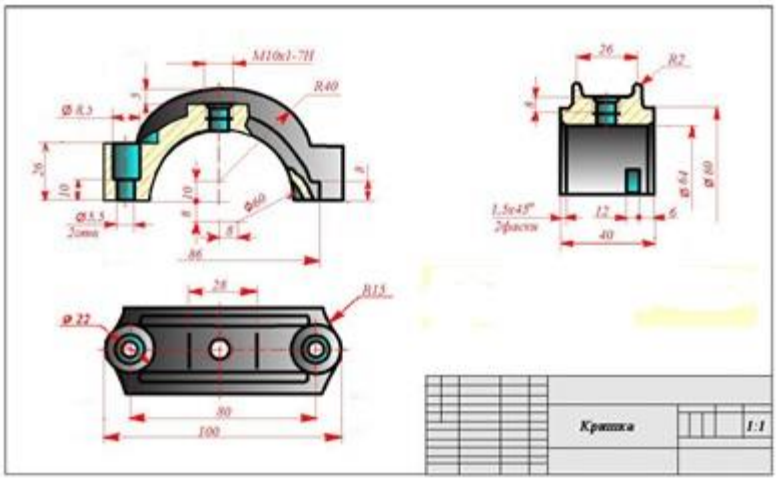

Figure 1.5.2 – Detail drawing

FOLDING DRAWING BOOK – a document that includes an image of an assembly unit and other data necessary for its assembly (manufacturing) and control (Fig. 1.5.3) .

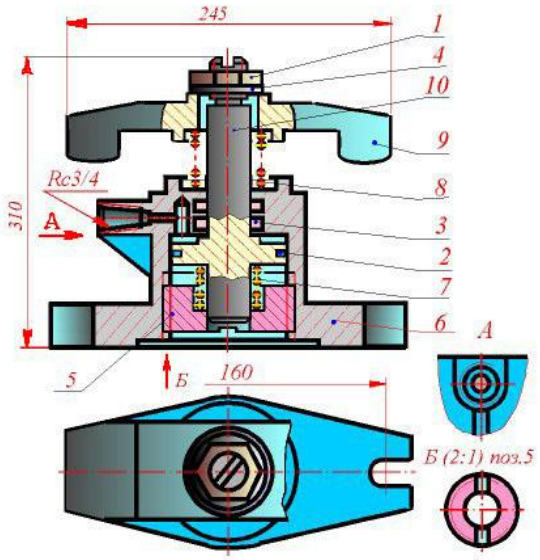

Figure 1.5.3 – Assembly drawing

GENERAL DRAWING BOOK – a document that defines the design of a product, the interaction of its individual parts, and explains the principle of operation of the product.

THEORETICAL DRAWING BOOK – a document that defines the geometric shape of the product and the coordinates of the location of the component parts.

LARGE DRAWING BOOK – a document that includes a contour (simplified) image of the product with overall, installation and connection dimensions.

ELECTRICAL, ASSEMBLY, PACKAGING DRAWINGS – documents that include a contour (simplified) image of the product, as well as data that allows you to perform the operation specified in the title.

SCHEME – a document that shows the components of a product, as well as the relationships between them, in the form of conventional images or symbols.

Text design documents are documents that include information about the product in the form of texts, tables, lists, etc.

Text documents include:

SPECIAL FUNCTION – a document that defines the parts of an assembly unit, complex or kit.

TECHNICAL CONDITIONS – a document that defines the requirements for a product, its manufacture, control, supply, as well as various ***INFORMATION, TABLES, EXPLANATORY NOTES*** , etc.

Depending on the method of execution and nature of use, design documents are divided into:
ORIGINAL – documents made on any material and intended for the production of duplicates.
DUPLICATES – copies of originals that ensure the identity of the originals, made on any material.
COPIES – documents executed in a manner that ensures their identity with the originals and intended for direct use in the development, operation and repair of products.

1.5.3 Stages of development of design documents

Depending on the stages of development established by DSTU 3321:2003, design documents are divided into ***PROJECT I*** and ***WORKING.***

PROJECTS include ***TECHNICAL PROPOSAL , DRAWING PROJECT , TECHNICAL PROJECT. Drawings of general*** **types** included in the technical project contain initial data for the execution of ***additional documentation - SPECIFICATIONS*** , ***ASSEMBLY DRAWINGS , DETAIL DRAWINGS*** etc.

In accordance with DSTU 3321:2003, the following stages of development of design documentation are established:

1. ***TECHNICAL PROPOSAL*** – a set of design documents that include an analysis of various options for possible solutions to the customer's technical task, a feasibility study of the proposed options, a patent search, etc.

2. ***DRAFT PROJECT – a*** set of design documents that must include fundamental design solutions that provide a general idea of the device and the principle of its operation, as well as data that determine the purpose, main parameters and overall dimensions of the product being developed.

3. ***TECHNICAL PROJECT – a*** set of design documents that must include final technical solutions that provide a complete picture of the product being developed and the initial data for the development of working documentation. The technical project is the basis for the development of working design ***documentation .***

4. ***DESIGN DOCUMENTATION – a set of design documents intended for the manufacture and testing of a*** prototype, an established batch, and serial production ***of devices .***

1.5.4 Image

Drawing books contain images that, depending on their content, are divided into **types** , **cuts** and **Cross-sections** . Images of an object allow us to visualize the shapes of its individual surfaces, as well as the relative arrangement of these surfaces. To determine the size of the product and its parts, dimensions are applied to the corresponding images.

The image of the object is performed using the method of rectangular projection, assuming that the object is located between the observer and the corresponding projection plane. The main projection planes are three mutually perpendicular planes 1, 2 and 3. (fig. 1.5.4), as well as the planes 4, 5 and 6 parallel to them. All of the listed projection planes form the faces of a cube or parallelepiped. Faces 1, 2 and 3 are taken as the frontal, horizontal and profile planes of projections, respectively. The faces of the cube with the images located on them are combined into one plane (fig. 1.5.4).

The image on the frontal projection plane is taken as the main one on the drawing board . The object is positioned relative to the frontal projection plane so that the image on it, giving the most complete idea of the shape and dimensions of the object, facilitates the use of the drawing board in the manufacture of the product.

The practice of designing various parts has established recommendations for choosing the main view when depicting a particular part, depending on its structural or technological features. In DSTU ISO 5455:2005 The basic rules and recommendations for creating images on drawings are considered .

According to **ISO 5455-1** the projection method in the first quadrant is regulated, and **ISO 5455-2** establishes the rules for projection in the third quadrant. On (fig. 1.5.4) shows the placement of the object images relative to the frontal plane when projected in the first quadrant. If we swap the positions of the right and left views, as well as the top and bottom views on (fig. 1.5.4), then the projection took place according to the rules of the third quadrant.

The first quadrant projection method is used to produce drawings.

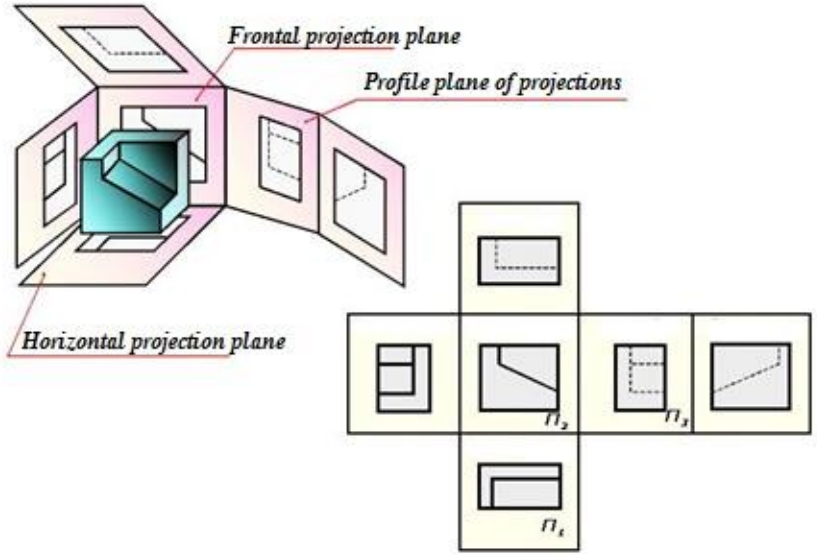

Figure 1.5.4 - Rules and recommendations for creating images on drawing boards

Types

A view is an image of the visible part of an object's surface turned towards the observer. (**ISO 128-30:2005**). Invisible parts of the surface of an object may be shown in views by thin dashed lines. (fig. 1.5.4). The use of thin dashed lines, in some cases, allows you to reduce the number of necessary images without compromising the clarity of the drawings.

According to the nature and content of the performance, the types are divided into **main, auxiliary and local** .

Principal views – **views obtained on the principal projection planes** (fig. 1.5.4).

Depending on the projection plane on which the main view is obtained, their corresponding names are established: 1 - front view (main view); 2 - top view; 3 - left view; 4 - right view; 5 - bottom view; 6 - rear view.

When choosing the main view, it should be taken into account that, in addition to a clear idea of the shape and dimensions of the object, it should ensure the rational placement of the remaining views on the drawing.

The main types are placed in a projective relationship with each other (fig. 1.5.4). In this case, no inscriptions explaining the names of the species are given. The rear view is allowed to be placed to the left of the right view.

If any view is placed on the drawing sheet not in a projection connection with the rest of the views, then an inscription is made above this view, for example ***B*** (Fig. 1.5.5). At the same time, the direction of the gaze is indicated by an arrow next to the image associated with this view. Above the arrow, the same capital letter of the Ukrainian alphabet is placed as in the inscription above the view.

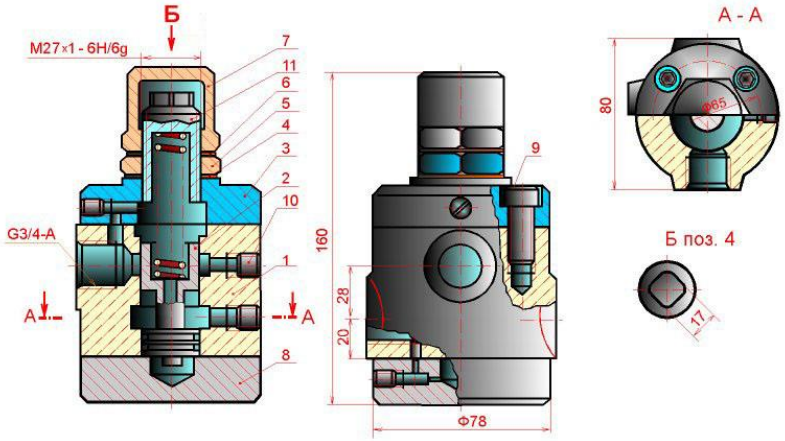

Figure 1.5.5 – Example of an additional view

Inscriptions are also made if the views are in a projection connection with each other, but are separated from each other by some images. Inscriptions above the views are also made if the views are located on different sheets.

1.5.5 Cuts and their classification

Using a large number of dashed lines to depict the contours of invisible surfaces can make drawings difficult to read. In such cases, sections should be used to optimize the reading of drawings.

A section is an image of an object, mentally dissected by one or more planes, and the part of the object located between the observer and the cutting plane is removed in the mind, the surfaces that were covered by this part become visible . A section is a combination of a section of an object by a cutting plane with an image of the parts of the object located behind this cutting plane. An imaginary section of an object refers only to a specific view and does not entail changes in other images of the same object. Depending on the number of cutting planes, sections are divided into **simple** (one secant plane) and **complex** (two or more cutting planes). Local cuts are also used. Cuts are called **longitudinal** , if the cutting planes are directed along the length or height of the object, and **transverse** if the cutting planes are directed perpendicular to the length or height of the object.

Classification of cuts

1.5.5.1 Simple cuts

Sections obtained by using one cutting plane are called simple . Depending on the position of the cutting plane relative to the horizontal projection plane, sections are divided into **horizontal** (the secant plane is parallel to the horizontal projection plane), **vertical** (the secant plane is perpendicular to the horizontal plane of projections) and **inclined** (the secant plane makes an angle other than a right angle with the horizontal plane of projections).

A vertical cut is called **frontal** , if the secant plane is parallel to the frontal plane of projections, and **profile** if the secant plane is parallel to the profile plane of the projections.

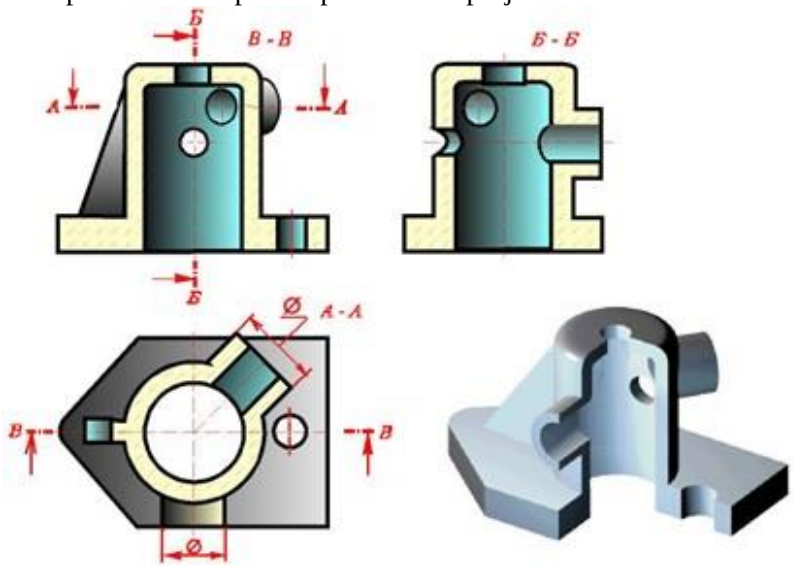

Figure 1.5.6 – Examples of sections

On (Fig. 1.5.6) The images of the part are horizontal, profile and frontal sections. These sections are located in the place of the corresponding main views (in the place of the top view, left view and front view), as allowed by DSTU ISO 5455:2005 .

In the general case, the position of the cutting plane is indicated on the drawing by a section line, for which **long dashed thick line** . Perpendicular to these strokes, arrows are drawn, indicating the direction of view. The arrows are drawn at a distance of 2- 3 ммfrom the outer end of the stroke of the intersection line. Near the arrows, on the outer side of the ends of the strokes of the intersection line, a capital letter of the Ukrainian alphabet is drawn, for example ***А.*** Regardless of the position of the strokes of the intersection line, the letters are always drawn as if they were located on a horizontal line (Fig. 1.5.6). Above the section, an inscription is made, consisting of the corresponding letters indicating the position of the cutting plane,

written through dashes (for example: ***A-A***, ***B-B***, ***C-C***, etc.). Horizontal section (Fig. 1.5.6, **A-A**) allows you to specify the internal contours of the part and the shape of the hole in the part. Profile section (Fig. 1.5.6, ***B-B***) explains the shape of the hole in the wall of the part. If the cutting plane coincides with the plane of symmetry of the object as a whole, and the corresponding images are located in direct projection connection and are not separated by any images, then for horizontal, frontal and profile sections the position of the cutting plane is not indicated, and the section itself is not accompanied by an inscription.

On Fig. 1.5.8 To reveal the internal shapes of the elements of the part, a vertical section is used, obtained using a cutting plane that is not parallel to either the frontal or profile planes of the projections. Such sections are called **inclined** , and they are built and arranged according to the direction indicated by the arrows on the section line (Fig. 1.5.7). It is allowed to place these sections anywhere in the drawing, and also to rotate them to the position corresponding to the one adopted for this object in the main image.

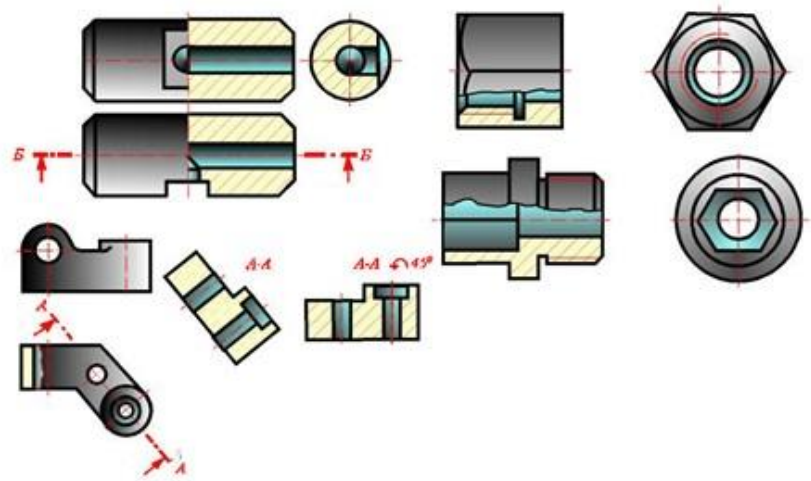

Figure 1.5.7 – Example of performing an inclined cut

Part of the view and part of the corresponding section may be combined on one image, separating them with a solid wavy line (Fig. 1.5.7). Dashed lines corresponding to invisible contours are usually not drawn on the parts of the view and section that are connected **. If the parts of the view and section that are connected are symmetrical figures, then they are separated from each other by the axis of symmetry of the images.** The part of the image that is a section is usually depicted to the right or below the axis of symmetry that separates the image. If any line coincides with the axis of symmetry of the image, for example, the projection of an edge, then the view from the section is separated by a solid wavy line drawn to the left or right of axes of symmetry.

Local incisions – sections designed to reveal the structural features of an object in a separate, limited location. A local section is distinguished on the image by a continuous wavy thin line, which should not coincide with any other lines of the image (Fig. 1.5.8).

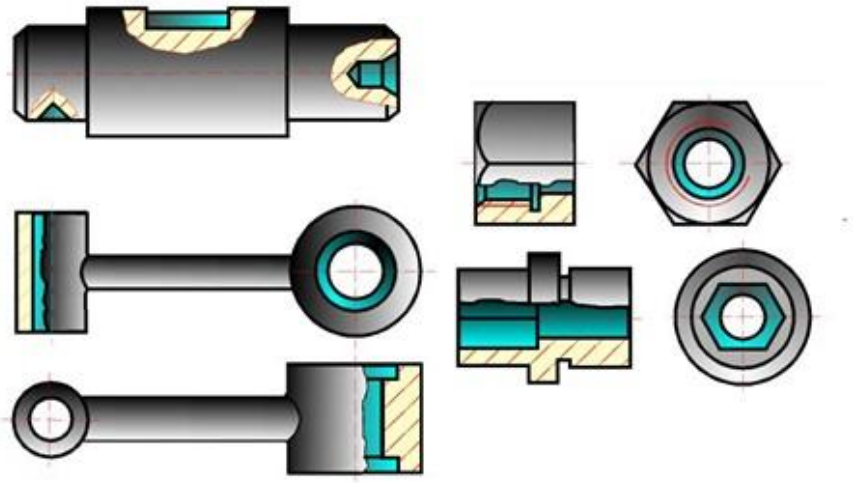

Figure 8 – Example of performing a local section

1.5.5.2 Complex cuts

Complex sections are obtained by imaginary cutting of a part with several cutting planes . Complex sections are used in cases where simple sections do not allow for a sufficiently simple explanation of the shape of the object or its elements. Complex sections are stepped and broken.

Stepped sections . A complex section is called stepped if the cutting planes that form it are parallel to each other. On fig. 1.5.9 To identify the shape of the holes in the elements of the part, three cutting planes are used, parallel to each other. The positions of the cutting planes are marked on the drawing with a section line. Arrows are placed on the initial and final strokes, indicating the direction of view. The places of transition from one cutting plane to another are marked with bends of the section line. The bends of the section line are made with lines of the same thickness as the strokes of the section line. A capital letter is applied near the initial and final strokes of the section line (as when designating simple sections). An inscription is made above the image of the section, which shows with the help of which cutting planes this section was obtained. When performing a stepped section, all parallel cutting planes are mentally combined into one, therefore the bends of the section line are not displayed on the section (i.e., a complex section is drawn as a simple one). On fig. 1.5.9 A frontal stepped section is presented, which is located in the place of the main view. Such sections can be placed anywhere in the drawing field.

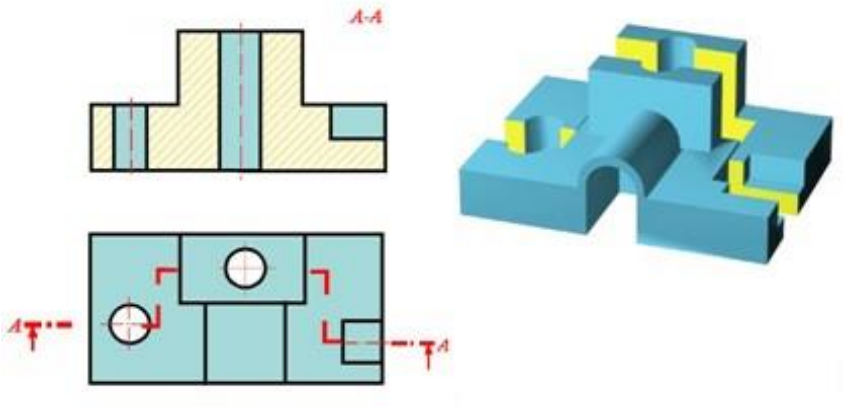

Figure 1.5.9 – Example of performing a stepped cut

Broken sections. Broken sections form intersecting cutting planes (Fig. 1.5.10). When constructing broken sections, usually one of the cutting planes is chosen parallel to any one of the main projection planes, and the second is rotated to combine with the first. When the combined planes are parallel to the projection plane, then the broken section is allowed to be placed in the place of the corresponding view. Together with the cutting plane, the section located in it is rotated. On Fig. 10 The dash-dotted line shows the position of the part obtained by conventionally rotating the section together with the cutting plane. The section is performed in accordance with the position of the part shown by the dash-dotted line. When designing a broken section in the drawing, the auxiliary constructions shown in Fig. 10, are not performed. Parts of the object located behind the cutting plane are depicted in the section as they are projected onto the corresponding plane, before combining with which the cutting plane is rotated (for example, a protrusion on Fig. 1.5.10).

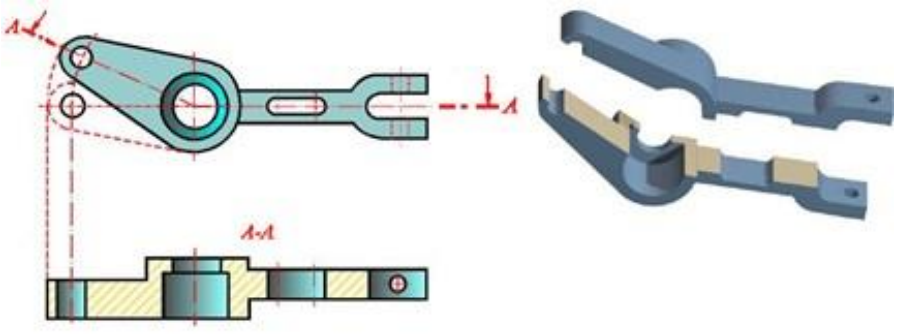

Figure 1.5.10 – Example of performing a broken section

1.5.5.3 Cross-sections

A cross-section is an image of a figure obtained by imaginary cutting of an object by one or more planes. A cross-section shows only what is located directly in the cutting plane .

On Fig. 1.5.11b The image of the section of the part located beyond the cutting plane does not provide additional information about the design of the part, therefore, in order to reduce the graphic work, only the section ***A-A can be depicted instead of the section*** (Fig. 1.5.11b).

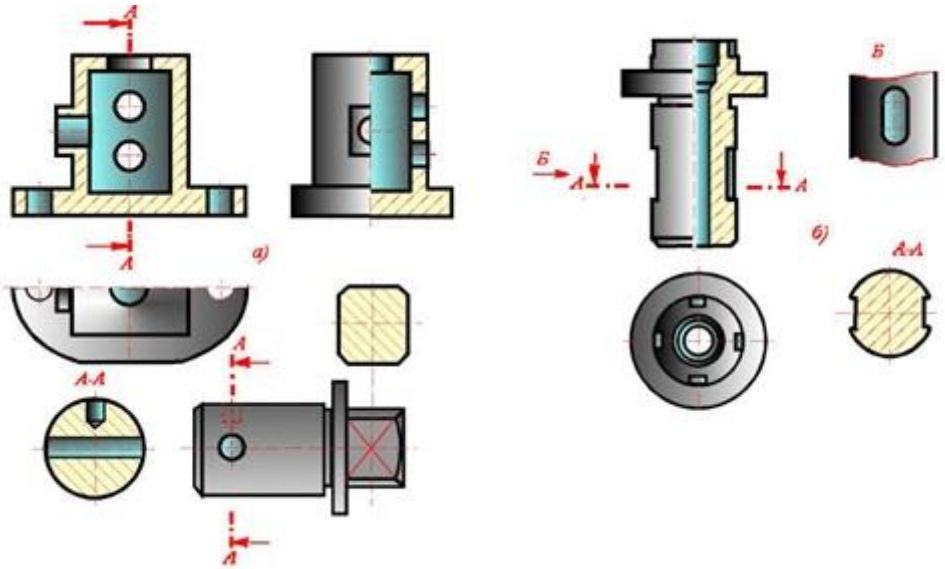

Figure 1.5.11 – Example of cross-section execution

According to their shape, cross-sections are divided into symmetrical (Fig. 1.5.11b) and asymmetrical (Fig. 1.5.12), and by the nature of the execution on the drawing - on the superimposed and removed (Fig. 1.5.12). Preference should be given to extended sections. Extended sections may be placed in the gap between parts of the same type (Fig. 1.5.12).

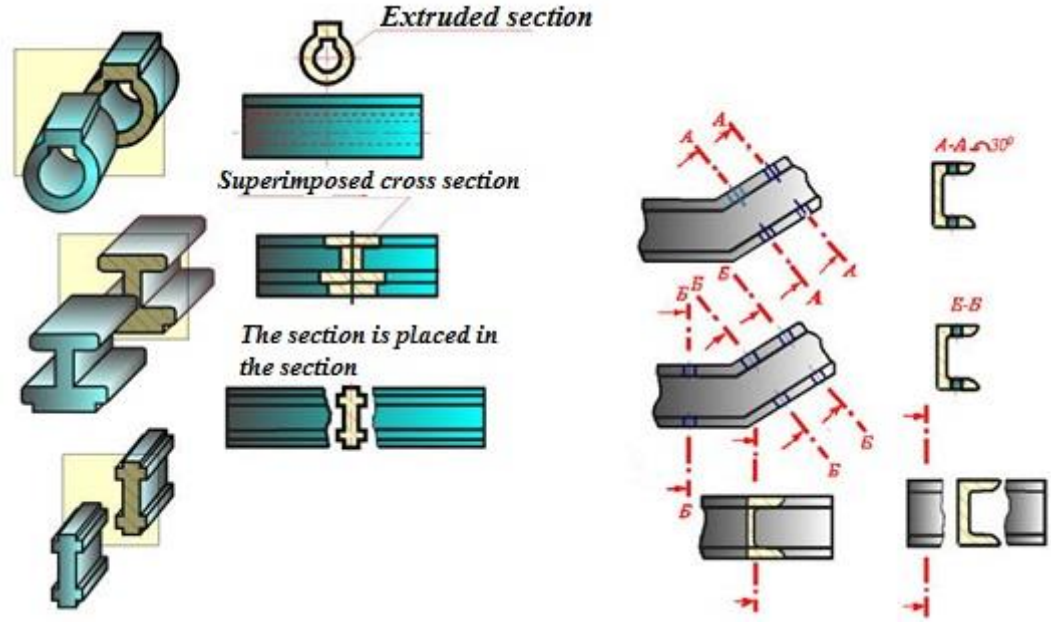

Figure 1.5.12 – Example of performing extended sections

The contour of the extended section is depicted with solid main lines, and the contour of the superimposed section is depicted with solid thin lines, and the contour of the image at the location of the superimposed section is not interrupted. In the general case, the position of the secant plane is indicated on the drawing by a section line, on which arrows are drawn, indicating the direction of view and are marked

with the same capital letters of the Ukrainian alphabet, while an inscription is made above the section, consisting of the same letters. For asymmetric sections, superimposed or located in a gap (Fig. 1.5.12), a section line is drawn with arrows, but it is not indicated with letters.

The axis of symmetry of a projected or superimposed symmetrical section is indicated by a dash-dotted thin line. Superimposed symmetrical sections are depicted without drawing a section line. A symmetrical projected section placed in a gap is also shown without drawing a section line. The section line is not drawn even if the projected symmetrical section is located in the immediate vicinity of the image and the axis of symmetry intersects the contours of the image.

As a rule, the construction and location of the section on the drawing sheet should correspond to the direction of view indicated by the arrows on the strokes of the section line. It is allowed to place the section anywhere in the field of the drawing sheet, as well as with a rotation, adding the symbol rotated in the inscription above it. (fig. 1.5.12). For several identical sections related to one object, the section lines are designated by one letter and one section is drawn. If the cutting planes are located at different angles, then the "rotated" sign is not applied. If the cutting plane passes through the axis of the surface of revolution that limits the hole or recess, then the contour of the hole or recess in the section is shown in full. If the cutting plane passes through a through non-circular hole and the section turns out to consist of separate independent parts, then instead of a section, a cut should be made. The section can also be made with several cutting planes.

1.5.6 Layout of images on the drawing board

A set of images of a part can be placed in different ways on the drawing board. However, not every arrangement of images on the format will be successful from the point of view of perception (Fig. 1.5.13).

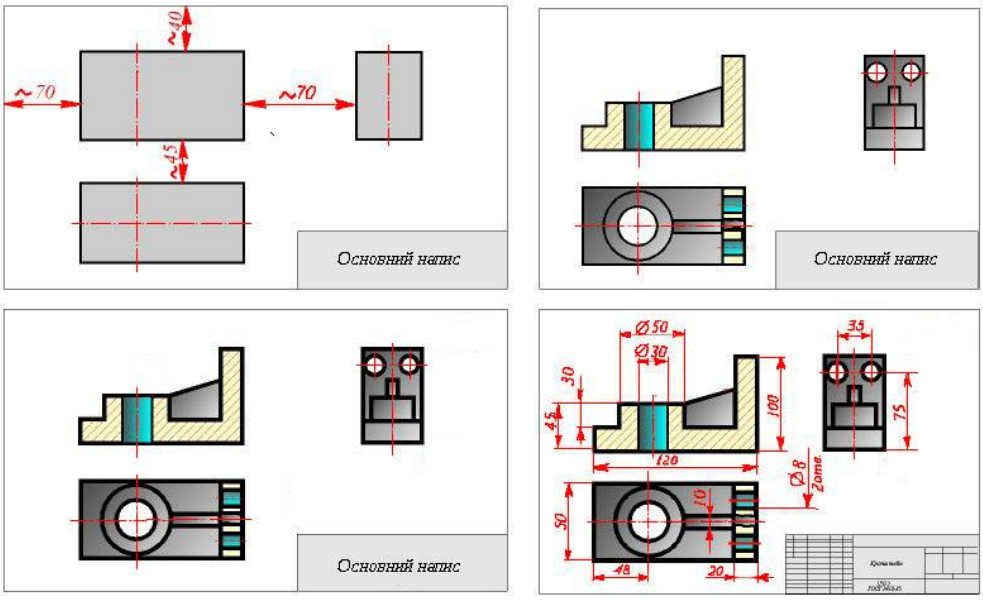

Figure 1.5.13 – Layout of images on the drawing board

The basis of optimal layout is the principle of balance of images with the format on which they are located. The principle of balance is that images should be evenly distributed on the sheet, and not concentrated in one, limited place. The distances between individual images and frame lines should be chosen from the condition of convenient application of dimensions and symbols (Fig. 1.5.13).

When arranging a drawing, it is also necessary to take into account some peculiarities of the perception of images by our eyes. For example, if you divide a sheet of paper in half with a horizontal line, the upper half will always seem larger than the lower. Therefore, for balance, the image should be placed not in the middle of the sheet, but somewhere closer to the upper edge .

1.5.7 Basic thread parameters

When assembling machines and mechanisms, their individual parts are mostly connected to each other using threaded fasteners: bolts, studs, screws (Fig. 1.5.14).

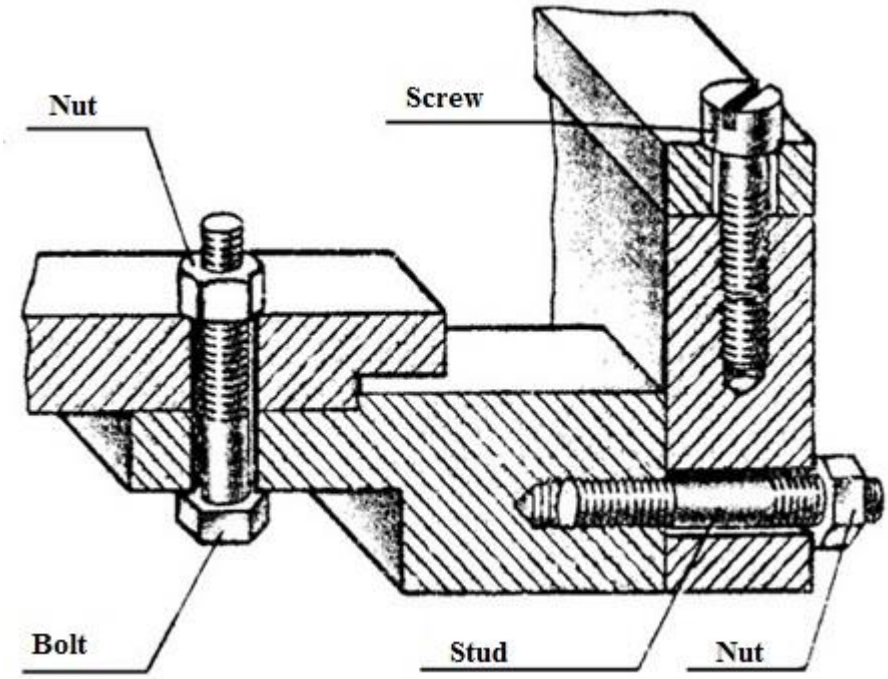

Figure 1.5.14 – Types of threaded connections

Threaded connections are widely used in mechanical engineering due to such qualities as versatility, high reliability, ability to withstand high loads, relatively small dimensions, ease of manufacture, etc.

The main element of all threaded connections is **the thread** .

A thread can be **external or internal, right or left, single-start or multi-start** . The shape of the thread profile determines its name.

Threads come in various profiles: **triangular, trapezoidal, rectangular, semicircular, and others** .

A triangular profile thread is usually cut on parts intended for fastening, and therefore it is called a fastening thread. Threads of other profiles, mainly trapezoidal and rectangular, belong to running threads (threads on the screw of machine vices, jacks, etc.).

A screw thread is a projection surface formed by the helical movement of an arbitrary flat contour on the side surface of a cylinder or cone.

Threads are distinguished:

1) by surface shape:

cylindrical – thread formed on the surface of the cylinder;

conical – a thread formed on the surface of a cone;

2) by the nature of the surface:

external – a thread formed on the outer surface of a cylinder or cone;

internal – a thread formed on the inner surface of a cylinder or cone;

3) in the direction of the thread:

rights – a thread formed by a contour that rotates clockwise and moves along an axis in the direction away from the observer;

left – a thread formed by a contour that rotates counterclockwise and moves along the axis in the direction away from the observer;

4) by the number of steps (ledges and grooves):

one-way – a thread formed by a single screw thread;

multi-country – a thread formed by two, three, etc. screw threads.

Thread pitch is the distance between corresponding points of two adjacent turns, measured parallel to the thread axis.

Thread pitch is the distance between corresponding points on the surface of a screw thread per one revolution of the contour, measured parallel to the thread axis.

The number of threads in a thread is the number of threads that form the thread.

Each type of thread is characterized by basic parameters in accordance with DSTU 16093:2018. The basic parameters include: external and internal thread diameters, pitch, angle and profile height.

Threads can be made (cut) using different technologies: manually - using a tap (die) or on a machine - using a cutter, milling cutter or knurling. At the beginning of the thread, as a rule, a chamfer is made to facilitate cutting and screwing. At the end, the thread may have a section with an incomplete profile - thread overlap. If thread overlap is unacceptable, it can be avoided using a special groove.

You should pay attention to the following points:

1) the distance between the solid thick and thin lines in the drawing is taken as 0,8 мм...P , where P is the thread pitch. In fact, this size for metric threads is 0.54P, for pipe threads - 0.64P, for trapezoidal threads - 0.5P, for thrust threads - 0.75P;

2) a thin thread line crosses the chamfer;

3) a thin line depicting the thread in the end view is drawn on 3/4 of a circle with a break anywhere, but not on the center lines;

4) the chamfer of a thread that has no constructive purpose is conventionally not depicted in the end view;

5) the thread overlap is not included in its length and, as a rule, is not depicted in the drawing.

If the thread is not visible, its boundary is shown with a dashed line. Non-standardized threads are depicted in the same way as standardized ones. Hatching in sections and cross-sections is carried out to the line of the outer diameter of the thread on the rod and to the line of the inner diameter in the hole .

All main fastening and running threads are standardized. The standards specify their profile and basic dimensions: nominal diameters and pitches.

1.5.7.1 Metric threads

Metric threads have the profile of an equilateral triangle with an angle of a ***=60*** (Fig. 1.5.16).

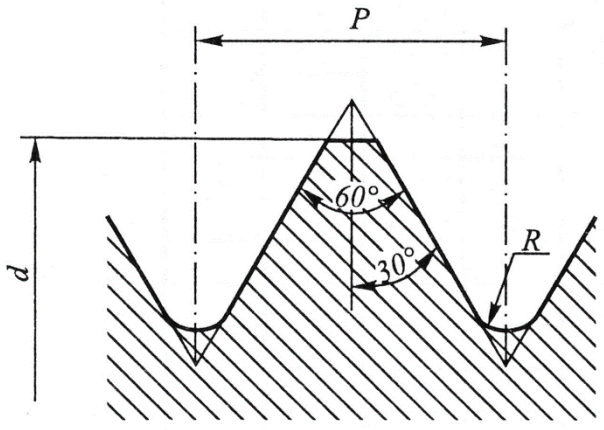

Figure 1.5.16 – Metric thread

To designate a metric thread, you need to know its nominal diameter and pitch.

The nominal diameter should be specified by checking it with a standardized series. The pitch value is included in the thread designation only if this pitch is small for the selected nominal diameter. An example of the designation of a metric thread with large and small pitches is shown in Fig. 1.5.17.

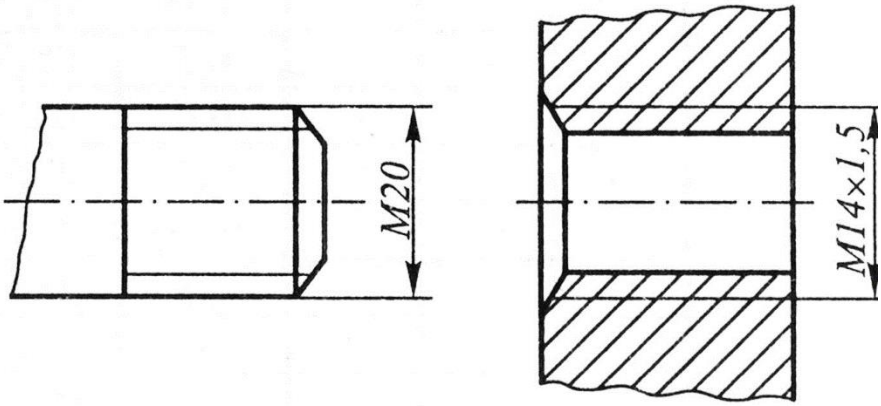

Figure 1.5.17 – Example of metric thread designation

1.5.7.2 Metric conical threads

Metric conical threads have the same profile as metric cylindrical threads and are made on a conical surface with a taper of ***1:16*** . The nominal diameters of the conical thread fully correspond to the nominal diameters of the cylindrical thread. Since only a fine pitch is used for conical metric threads, the latter must be indicated in the thread designation, for example, ***MK 30x2*** . A part with a metric conical thread can be screwed with a corresponding part of the same nominal diameter and pitch, which has a metric conical or metric cylindrical thread. An example of the image and designation of a metric conical thread is shown in Fig. 1.5.18.

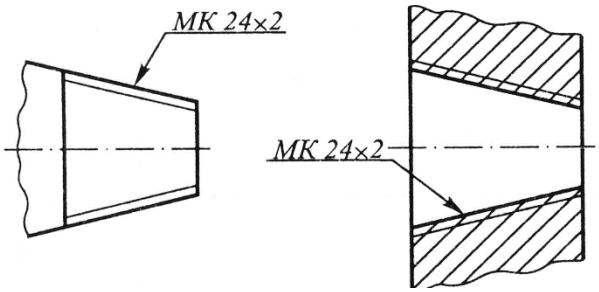

Figure 1.5.18 – Example of a metric tapered thread

1.5.7.3 Trapezoidal thread

Trapezoidal thread has the profile of a regular equilateral trapezoid with an angle ***a=30*** (Fig. 1.5.19).

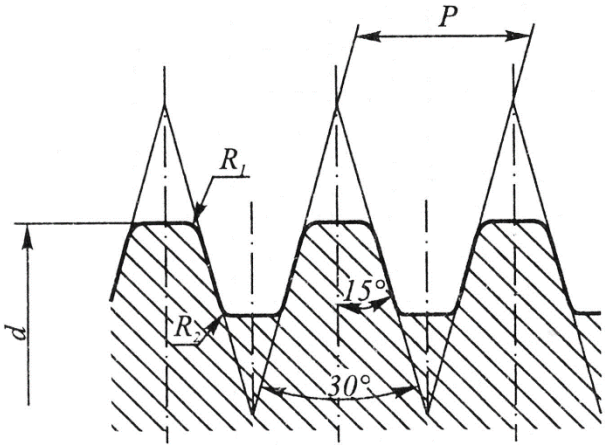

Figure 1.5.19 – Trapezoidal thread

Since the trapezoidal thread belongs to the running threads used to transmit motion, it can be single- and multi-start. Examples of the image and designation of the trapezoidal thread are shown in Fig. 1.5.20.

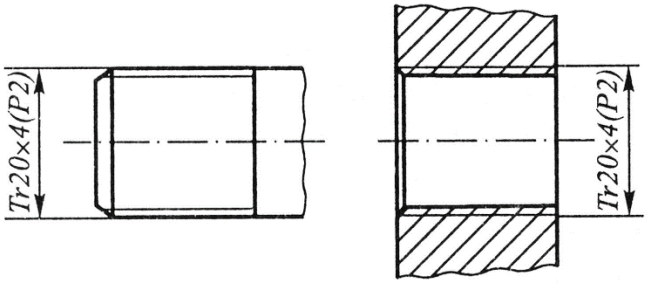

Figure 1.5.20 – Example image and trapezoidal thread designation

For multi-start threads, the designation structure includes the value of the stroke and pitch. For example, a trapezoidal double-start thread with a nominal diameter 24 мм, stroke 4 ммand pitch 2 ммis designated as follows: ***Tg24x4(P2)*** .

1.5.7.4 Thread is persistent

The thrust thread is regulated by DSTU 2497-94 and has an unequal trapezoidal profile (Fig. 1.5.21). The standardized series of nominal diameters begins with 10 ммand is the same as that of the trapezoidal thread. An example of the image and designation of a thrust multi-start thread is shown in Fig. 1.5.22. If the thread is single-start, the designation structure is simplified. For example, a thrust single-start thread with a nominal diameter 32 ммand pitch 3 ммis designated ***S 32x3***.

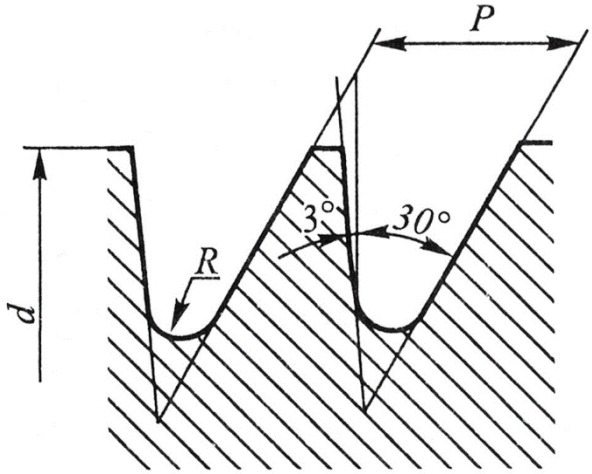

Figure 1.5.21 – Example of a thrust thread

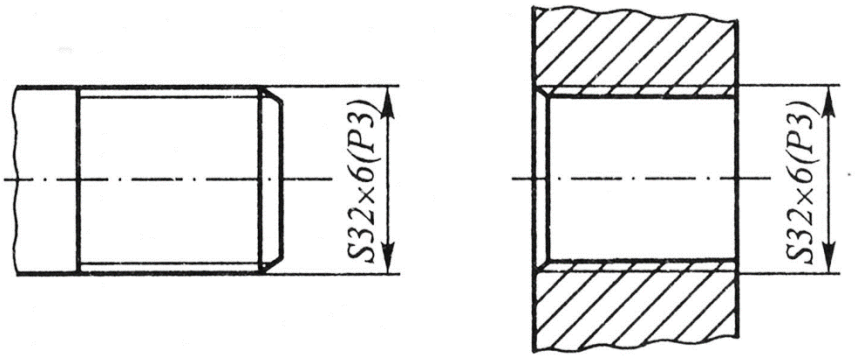

Figure 1.5.22 – Example of image and designation of thrust thread

1.5.7.5 Pipe cylindrical thread

The cylindrical pipe thread is regulated by ISO 7-1 and has the profile of an isosceles triangle with an angle of ***a=55*** (Fig. 1.5.23) .

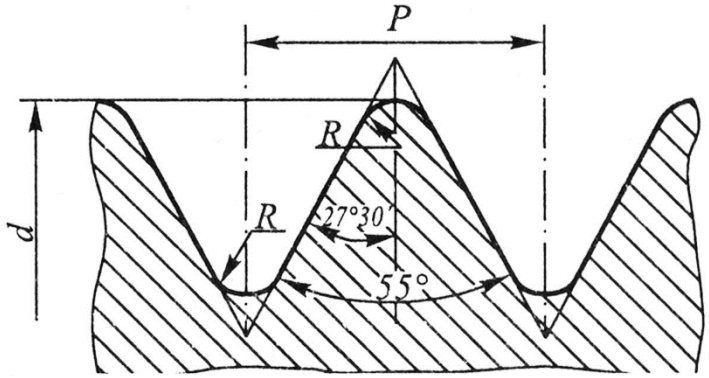

Figure 1.5.23 – Pipe cylindrical thread

It is used in threaded connections of internal cylindrical threads with external conical threads with a profile according to ISO 7-1. The nominal size of the pipe thread is the nominal passage **D** in inches (1 inch~ 25,4 мм). Since the diameter of the nominal passage does not coincide with the outer diameter of the thread, the pipe thread designation is applied on the shelf of the leader line (Fig. 1.5.24).

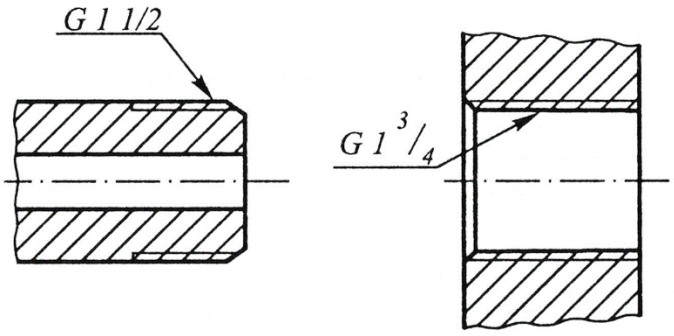

Figure 1.5.24 – Image and designation of pipe thread

Pipe taper thread

Conical pipe threads have the same profile as cylindrical pipe threads and are made on a conical surface with a taper of ***1:16***. The range of nominal diameters of conical pipe threads coincides with the range of nominal diameters of cylindrical pipe threads. A part with a conical pipe thread can be screwed into a corresponding part of the same nominal diameter, which has a conical pipe thread or a cylindrical pipe thread.

1.5.7.6 Rectangular thread

Rectangular (square) threads have a rectangular profile. Rectangular threads are not standardized, do not have designations, and therefore all thread parameters must be specified on the drawing; as a rule, this is done using a remote element. An image of a rectangular thread is shown in Fig. 1.5.25.

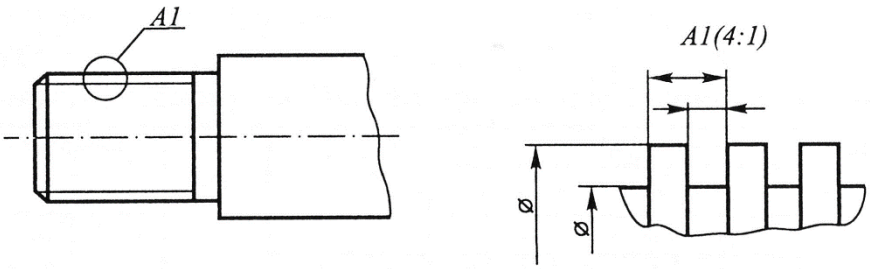

Figure 1.5.25 – Image of a rectangular thread

1.5.8 Bolt connection

A bolted connection contains a bolt, a washer, and a nut (Fig. 1.5.26).

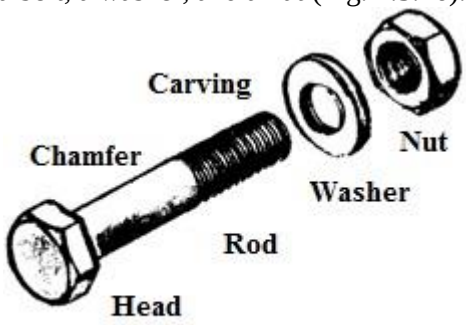

Figure 1.5.26 – Bolted connection

There are two cases of connection:

a) the diameter of the hole is larger than the diameter of the bolt shaft;

b) the nominal diameters of the hole and the bolt are equal.

Typically, the bolt is inserted with a gap into the hole and the connection is made by tightening the nut.

When making assembly drawings of machines, when it is necessary to depict many bolted connections, the bolt is drawn in a simplified manner according to conditional dimensional relationships depending on the thread diameter, as shown in Fig. 1.5.27. According to the tables from DSTU, depending on the nominal diameter d, the necessary parameters are selected. According to the dimensions selected from the relevant standards, images of fasteners are built only on the working drawings according to which they are manufactured.

In training drawings, images of threaded connections are usually built according to relative dimensions, the main ratios of which are given in Fig. 1.5.27a. Design dimensions are not applied on the drawings. Fig. 1.5.27b shows a simplified image without chamfers and gaps, the thread is shown on the entire rod, the thread is not shown in the top view.

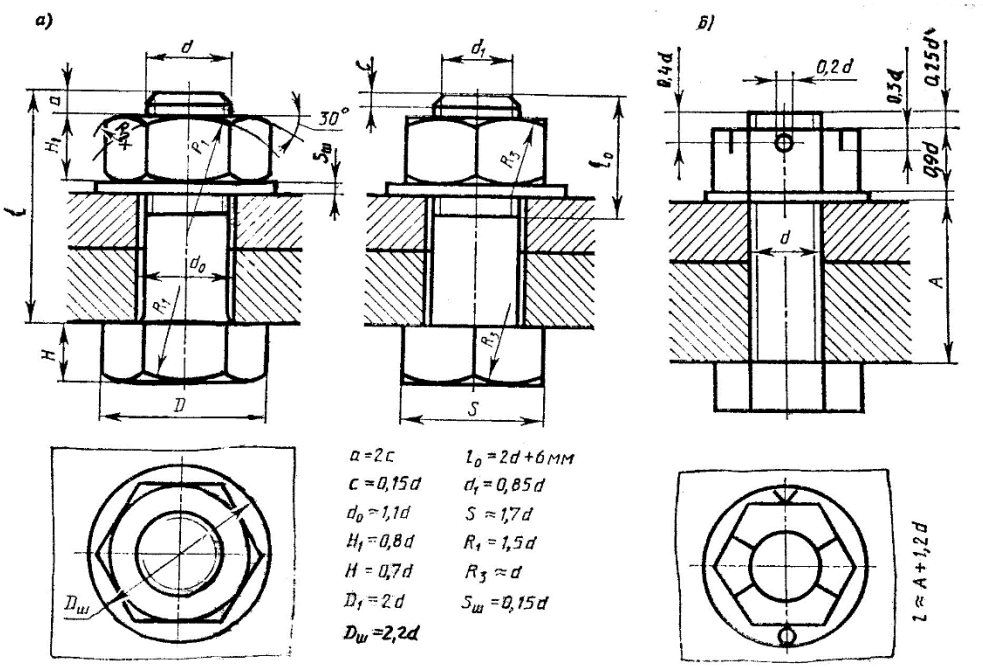

Figure 1.5.27 – Types of bolted connections

1.5.9 Pin connection

In Figure 1.5.28 shows a pin connection constructed using standard fastener dimensions. This image is used on assembly drawings where appropriate.

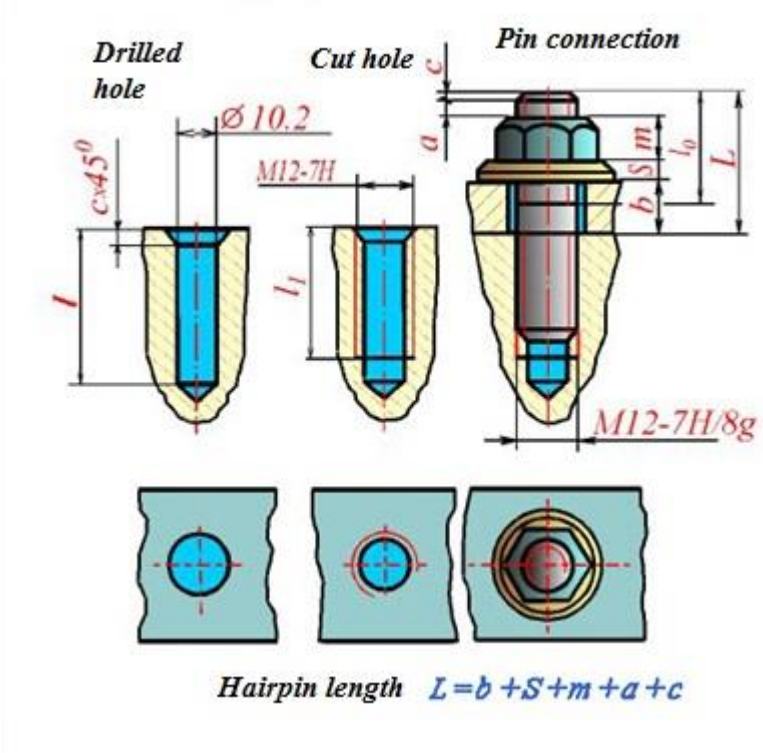

Figure 1.5.28 – Pin connection

The training drawings show a simplified representation of the pin connection (Fig. 1.5.29). The stud hole is first drilled according to the specified parameters, then the chamfer is made and the thread is cut .

The depth of the hole can be calculated using the values shown in Fig. 1.5.29 and ratios. The bottom of the socket has a conical shape. The length of the end of the screw-in stud is selected depending on the material of the part. So for steel this length is d, for cast iron – 1.25d, for aluminum – 2d.

In Figure 1.5.29 shows a complete structural image of a stud connection. The nominal length of the stud is calculated using the formula shown in the figure.

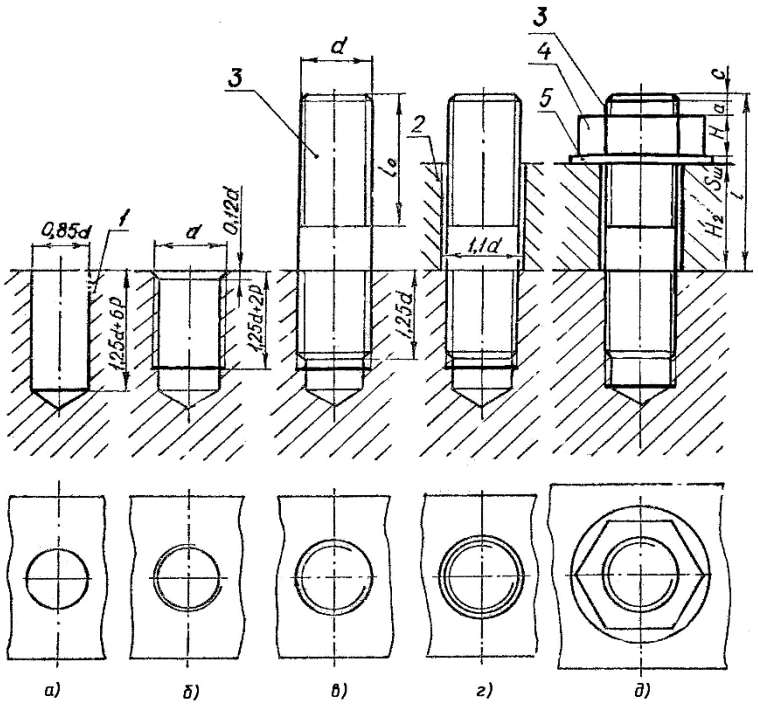

Figure 1.5.29 – Pin connection options

The calculated nominal length of the stud is equated with the standard length and the closest standard length is adopted.

1.5.10 Screw connection

In a screw connection, as in a stud connection, the threaded part of the screw is screwed into a threaded hole (Fig. 1.5.30).

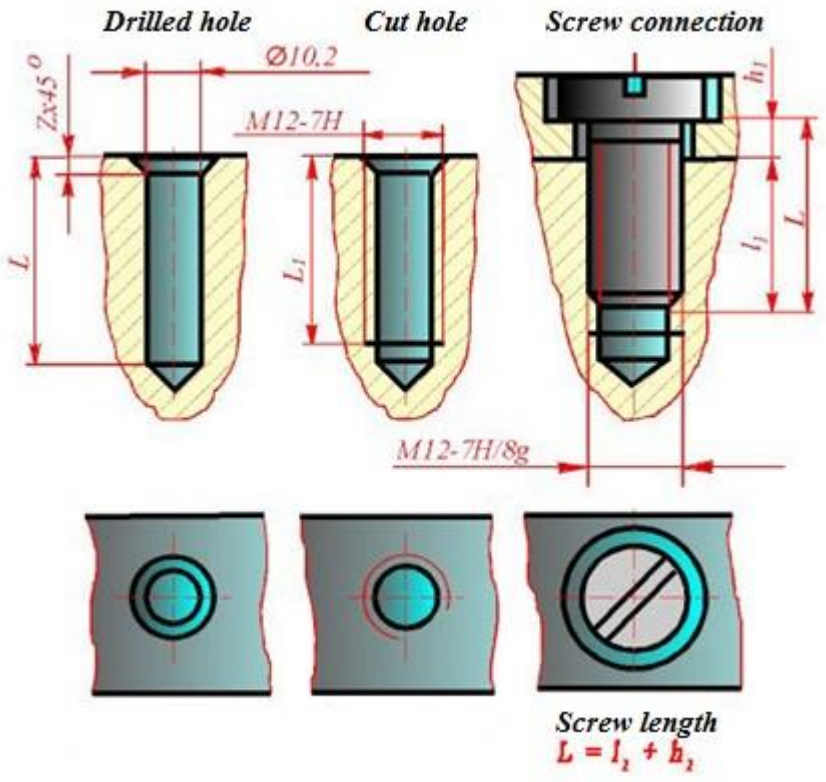

Figure 1.5.30 – Screw connection

The thread boundary of the screw should be slightly above the connector line of the connecting parts. The upper part in the holes does not have a thread. The length of the screw is calculated from the ratios in Fig. 1.5.30.

The calculated nominal screw length is equated with the standard length and the closest standard length is adopted.

1.5.11 Key connections

Keyed joints are divided into two types: stressed, which are created using wedge keys and can transmit torque and axial force, and unstressed, which are created using prismatic and segment keys and can transmit only torque. Unstressed keyed joints are more common in modern mechanical engineering (Fig. 1.5.31).

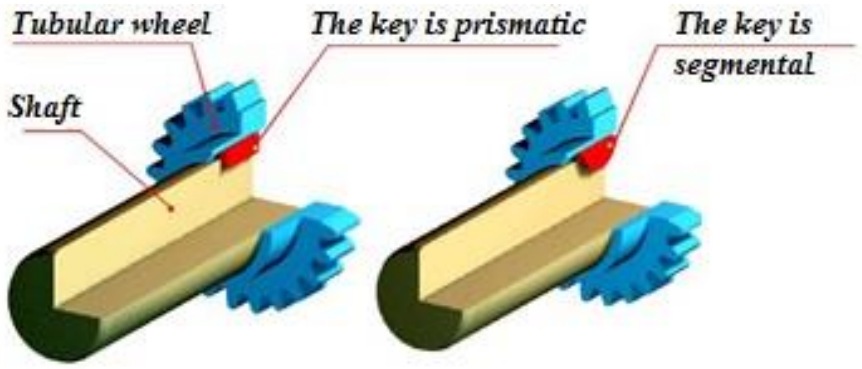

Figure 1.5.31 – Keyway connection

Connection with prismatic keys

Keyways on the shaft usually have a length equal to the length of the key itself, they are made with a finger or disk cutter, and the groove in the wheel hub is made with a broach or other tools.

Fig. 1.5.32 shows an example of a keyway connection using a prismatic key.

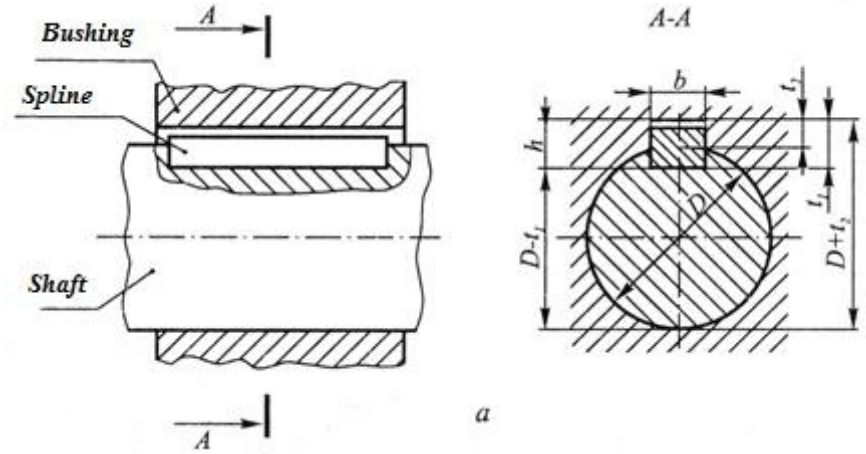

Figure 1.5.32 – Prismatic key connections

Connection with wedge keys

When it is necessary to connect a shaft to some part, for example, to a wheel using a wedge key without a head, then a groove in the form of a rectangular groove is milled on the shaft along the generating lines, corresponding to the width of the key.

At the exit from the shaft, the groove has a rounding that is equal to the radius of the cutter (Fig. 1.5.33). The depth of the groove is determined according to the standards table .

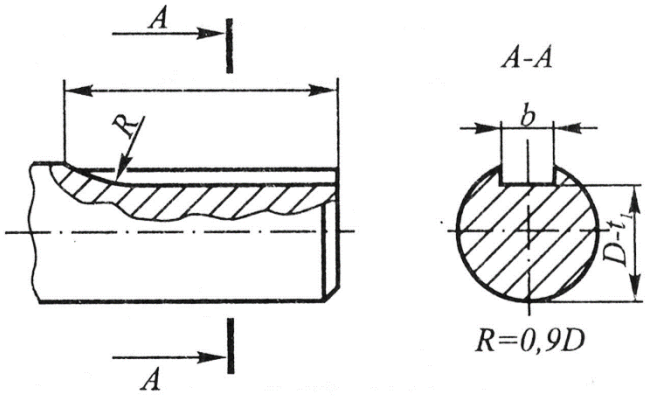

Figure 1.5.33 – Wedge key connection

The length of the groove for the wedge key must be at least twice the length of the key itself, so that the key can be installed in the groove and moved along it for fastening. The groove of the same width is made in the hub of the connected wheel along its entire length. The groove on the shaft has no slope, and the bottom of the groove in the hub is made with a slope of ***1: 100***, like that of the key.

Connection with segment keys

Segmental keys in a connection work similarly to prismatic keys, because torque is transmitted by the side faces of the keys and grooves.

Fig. 1.5.34 shows an example of a segmented groove in a shaft. The key parameters are determined according to the standards table.

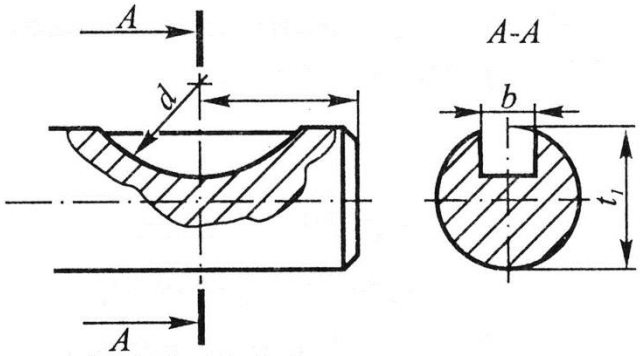

Figure 1.5.34 – Connection with segment keys

General drawings of the most commonly used keys are presented in Fig. 1.5.35

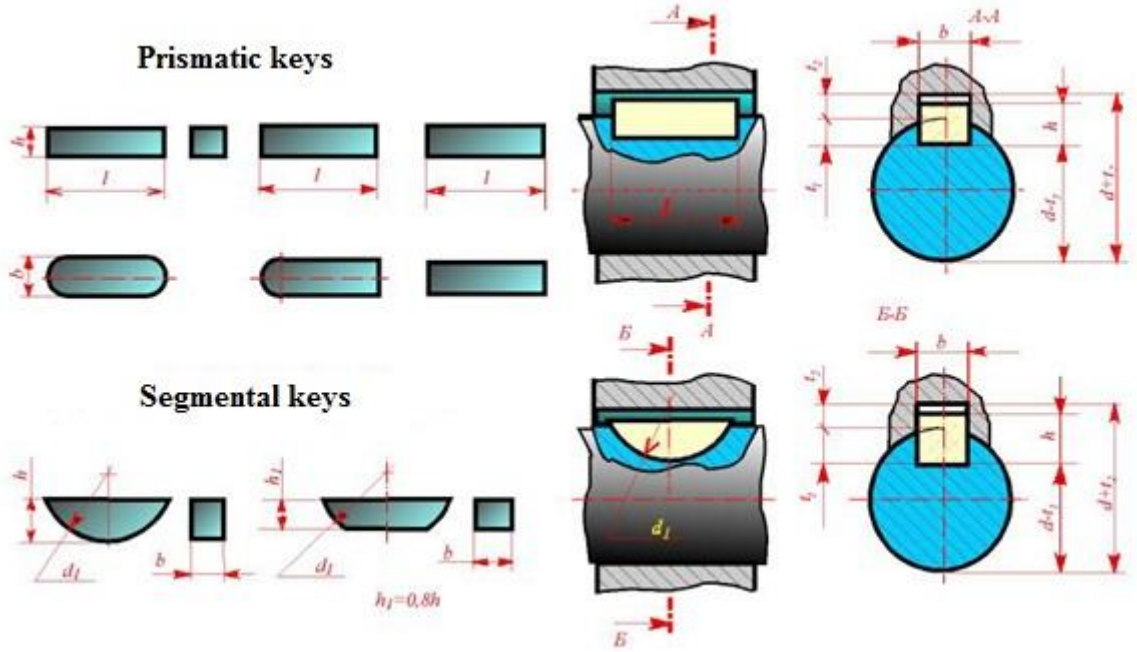

Figure 1.5.35 – Most commonly used segment keys

1.5.12 Spline connections

A spline connection is a multi-key connection in which the "keys" (slots) are made integral with the shaft and are arranged parallel to its axis. There are spline connections with straight, involute and triangular tooth profile shapes. In Fig. 1.5.36 shows a spline connection with straight and involute spline profiles.

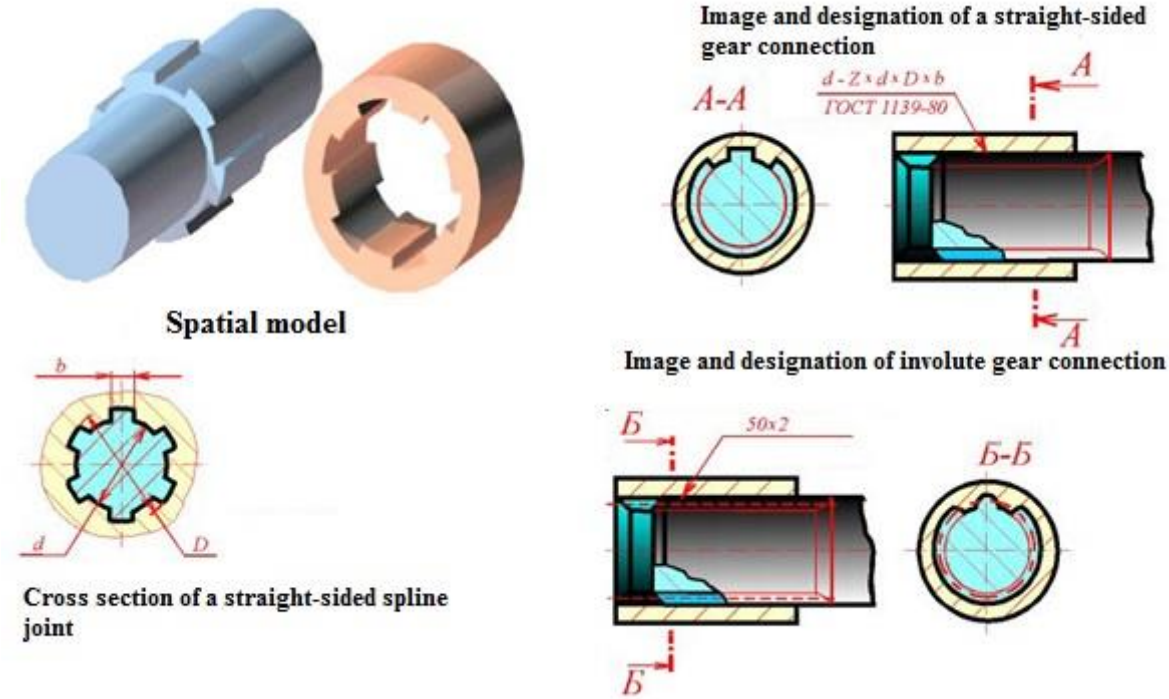

Figure 1.5.36 – Spline joints

1.5.13 Connection with straight-sided slot profile

These connections are the most common in industry. The tooth profile is designed so that the tooth width **b** is equal to the width of the cavity or the circumference of the inner diameter - **d** , or along the circumference of the outer diameter – **D** (Fig. 1.5.37).

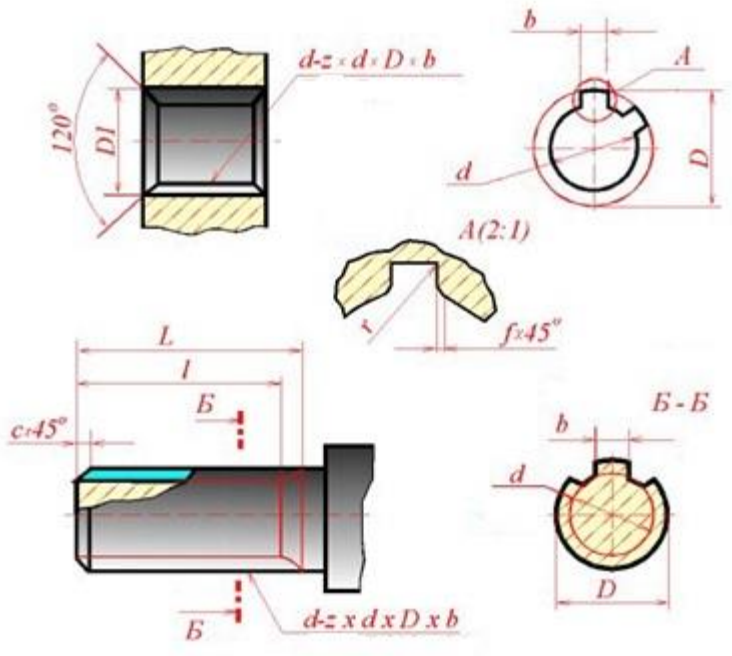

Figure 1.5.37 – Connection with straight-sided slot profile

According to DSTU 2742-94, the tooth profile is built along a circle of inner diameter – **d**. So, to build a shaft, for example with four splines, it is necessary to divide the length of the circle of diameter **d** – into eight equal parts and draw the sides of each tooth (spline) through the division points parallel to the axis of symmetry of the tooth to the intersection with the circle of diameter – **D**.

The number of teeth in a splined connection can be: **4, 6, 8, 10, 16, 20.** The most common connections are with 6 and 10 splines. Splined shafts are made by machining with special cutters, and holes with splines are made using a special tool - a broach.

DSTU provides for three main series of connections: light, medium and heavy, which differ in height and number of teeth. The alignment of parts (shaft with wheel) connected by means of straight-sided profile splines is achieved by one of three methods of centering the parts:

a) by outer diameter – **D**;

b) according to the inner diameter – **d**;

c) on the sides - teeth.

With all centering methods, the slots in the hole have the same profile, shown in Fig. 1.5.38.

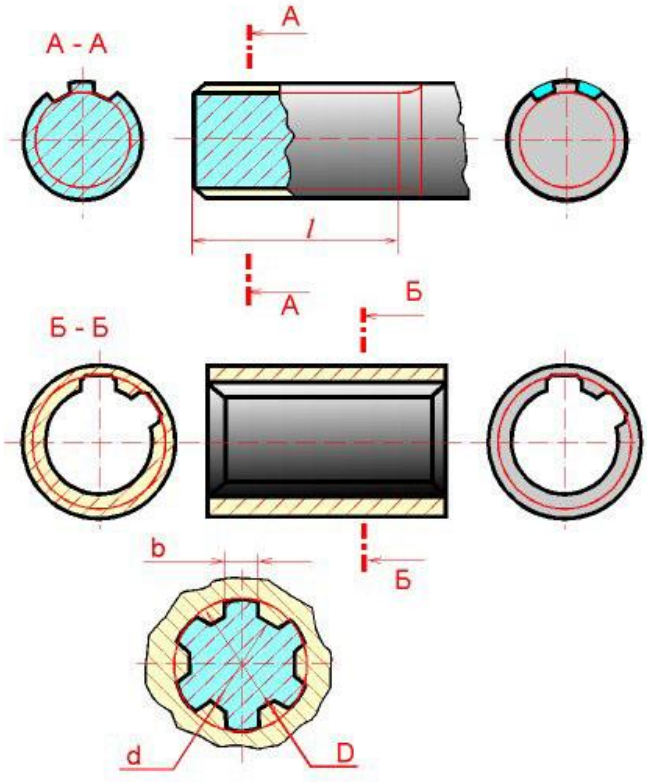

Figure 1.5.38 – Slot profile

The profile of the splines on the shaft depends on the centering method.

In drawings and technical documents, spline joints are designated conventionally (Fig. 1.5.38). The conventional designation indicates: the letter sign of the centering surface **d, D, b** , the number of teeth z and the dimensions of the diameters **d** and **D** , the designation of the tolerance fields (fits on the centering diameter and the sides of the teeth **b**).

For example, **d6X28X34** – centering on the inner diameter **d**, 6 – number of teeth, 28 – inner (small) diameter **d** of the protrusions in the hole and the depressions on the shaft, 34 – outer (large) diameter **D** of the depressions in the hole. Similarly: **D8X36X42** ; **b8X52X60** .

In the examples given, the symbols are given without indicating the fits. The basic rules for constructing conditional images of spline connections are adopted according to DSTU 1139-80.

In fig. 1.5.38 shows a conventionally splined shaft and a sleeve with splines.

For shafts, the generator and circles of the tooth projection surfaces are depicted as solid main lines, and the generator and circles of the tooth depression surfaces are depicted as solid thin lines. The thin lines depict the line of coincidence of the splines, the boundary between the splines and the rest of the part surface, and the boundary between the full profile splines and coincidence.

On longitudinal sections, the teeth are not shaded and the generating surfaces of the depressions are depicted as solid main lines. On projections perpendicular to the shaft axis, the profile of one or two teeth is shown simplified (without chamfers, grooves, etc.). The image indicates the working length **l** , i.e. the length of the full profile slot without overlap. The full slot length, overlap length, and radius of curvature can also be plotted.

When necessary, indicate the outer and inner diameters, tooth width, and number of teeth.

1.5.14 Connection with involute spline profile

Involute profile splines are used in connections where increased centering accuracy is required.

According to the standard, involute gears are accepted with a number of teeth from 11 to 50 and with a number of modules: 1; 1.5; 2; 2.5; 5; 7; 10 мм.

Centering is carried out by the size of the teeth (Fig. 1.5.39), (Fig. 1.5.40) or by the outer diameter of the splines **D.**

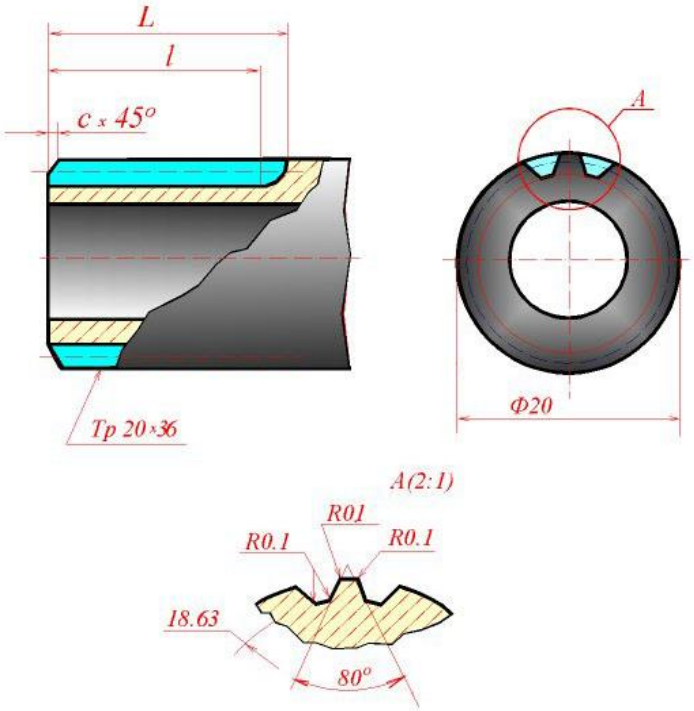

Figure 1.5.39 – Centering by tooth size

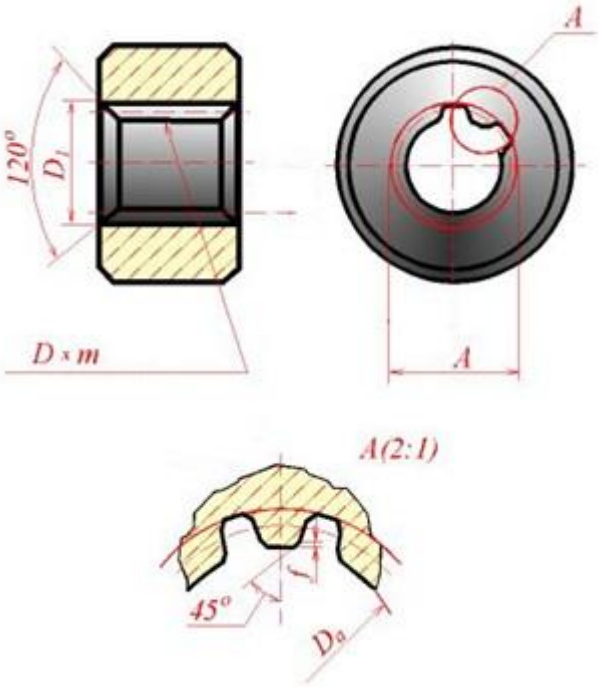

Figure 1.5.40 – Centering on the outer diameter of the splines

Centering by tooth size is more common. The bottom of the tooth cavities can be flat or rounded. Calculation formulas for involute profile splines are given in DSTU 6033 - 80.

The symbols for spline connections with an involute profile include the name of the profile - the letters **Tr** , the diameter size **D** , the modulus value **m** , the number of teeth **z** , and the designation of the centering method.

For example, **Tr 50 X 2.5 X 18 S** means: shaft of involute gear connection with outer diameter **D** = 50 mm, module **m** – 2,5 мм, number of teeth **z** = 18, centering along tooth width S.

1.5.15 Designation of surface roughness

Surface roughness is determined by six parameters established by DSTU 2409-94 "Surface roughness". However, surface roughness is classified by the numerical values of only two parameters **Ra and Rz**, which depend on the type of processing and show the micro-geometric deviation of the real surface from the ideal one (Fig. 1.5.41).

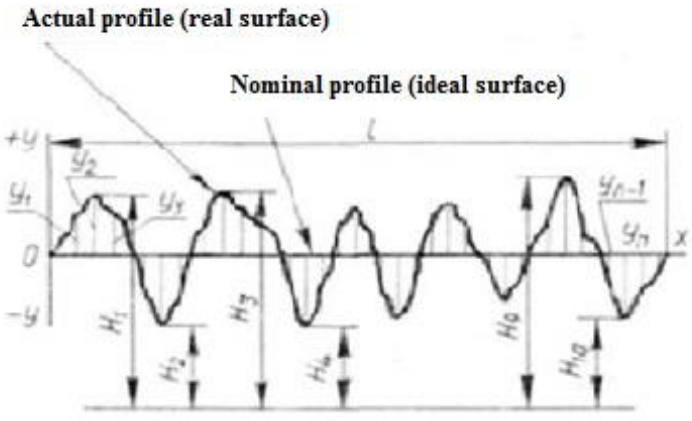

Figure 1.5.41 – Surface roughness designation

The parameter **Ra** determines the arithmetic mean deviation of the profile from the mean line within the base length, and **Rz** is the average value of the height of the profile irregularities at ten points. It is preferable to use the parameter **Ra** .

The following values of the **Ra parameter are preferably used: 100, 50, 25, 12.5, 6.3, 3.2, 1.6, 0.8, 0.4 µm** .

For the conventional designation of surface roughness DSTU EN ISO 1302:2017 establishes special signs. The first sign (Fig. 1.5.42a) indicates the roughness of surfaces, the type of treatment of which the designer does not establish.

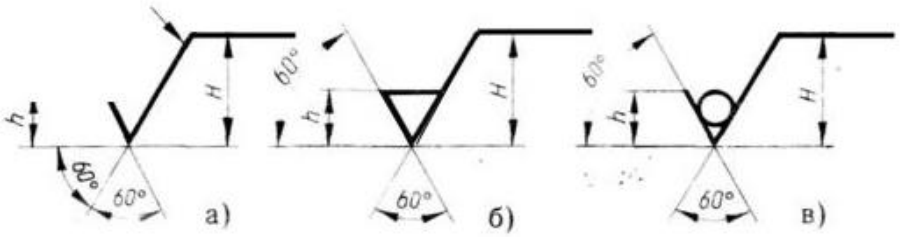

Figure 1.5.42 – Surface roughness signs

The second sign (Fig. 1.5.42b) is the roughness obtained by removing a layer of material (planing, milling, turning, drilling, grinding, polishing, etc.).

Third (Fig. 1.5.42c) – roughness of surfaces obtained by casting, forging, stamping and other methods without removing a layer of material, as well as surfaces that are not processed according to this drawing. Surfaces that are not processed according to this drawing (stored in the delivery condition) are designated without indicating the numerical value of the roughness.

The height **h** of the signs should be approximately equal to the height of the digits of the dimensional numbers on the drawing, and the height H is 1.5 h... 3h. The thickness of the lines of the signs should be half the thickness of the solid main line of the drawing. If the sign is applied in the upper right corner of the drawing, then its dimensions and thickness are taken 1.5 times larger than that of all the other signs on the drawing.

According to DSTU EN ISO 1302:2017 Surface roughness designations are placed on contour lines, extension lines, on extension line shelves, and sometimes on dimension lines. On an invisible contour line, roughness designations are allowed only in cases where a dimension is applied from it. The numerical values of roughness parameters and their indices for any arrangement of signs are applied according to the rules for the arrangement of dimensional numbers. Surface roughness designations of repeating elements, products

(holes, grooves, teeth, etc.), the number of which is indicated on the drawing, as well as roughness designations of the same surface are applied once, regardless of the number of images.

There are three possible cases of applying surface roughness designations on drawings:

1. All surfaces of the product must have the same roughness. In this case, its designation is indicated in the upper right corner of the drawing at a distance of 5...10 mm from the frame, and is not applied to the images (Fig. 1.5.43).

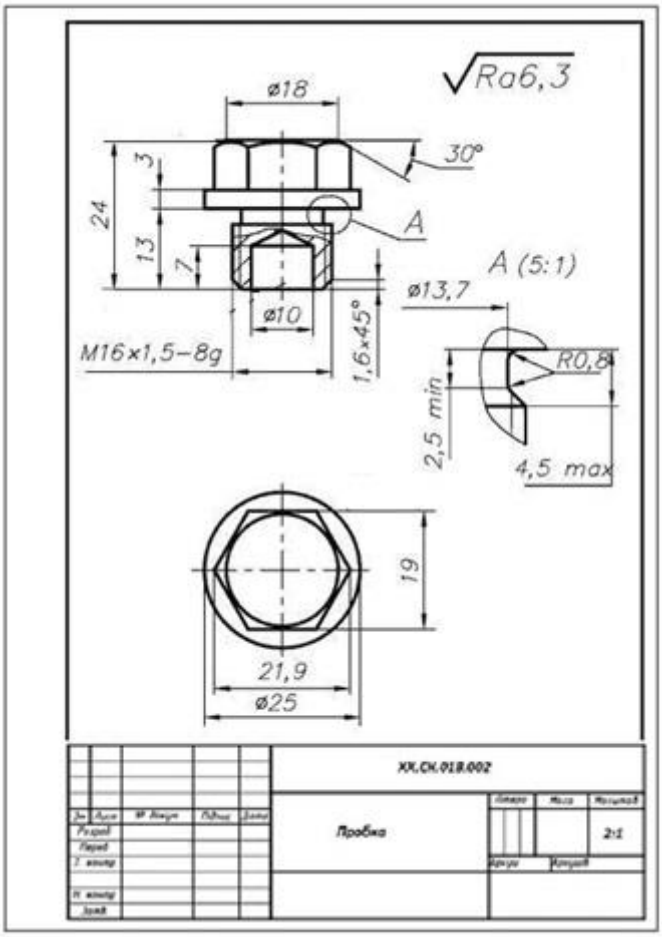

Figure 1.5.43 – All surfaces of the product have the same roughness

2. Only some of the surfaces should have the same roughness (Fig. 1.5.44). Its designation is placed in the upper right corner, supplemented in brackets with the sign shown in the figure. The sign in brackets replaces the word “other”. Such a record means that all surfaces, in the image of which the roughness designation or the sign shown in the figure 44 is not applied, must have the roughness indicated under the sign. The dimensions of the sign before the bracket are increased, and in the brackets - the same as the dimensions of the signs applied in the images.

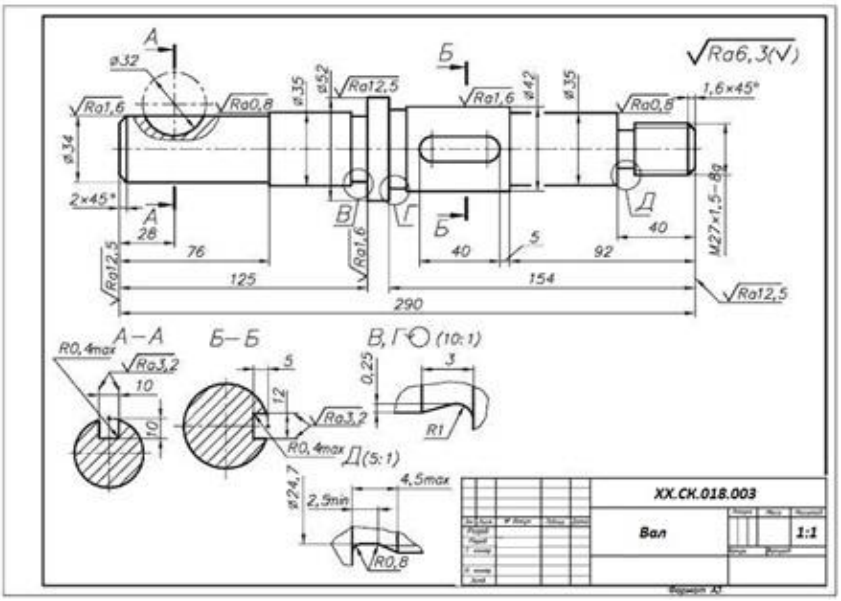

Figure 1.5.44 – Only some of the surfaces have the same roughness

3. Some surfaces are not processed according to this drawing. In the upper right corner of the drawing, before the bracket, the sign shown in the figure is placed (Fig. 1.5.45).

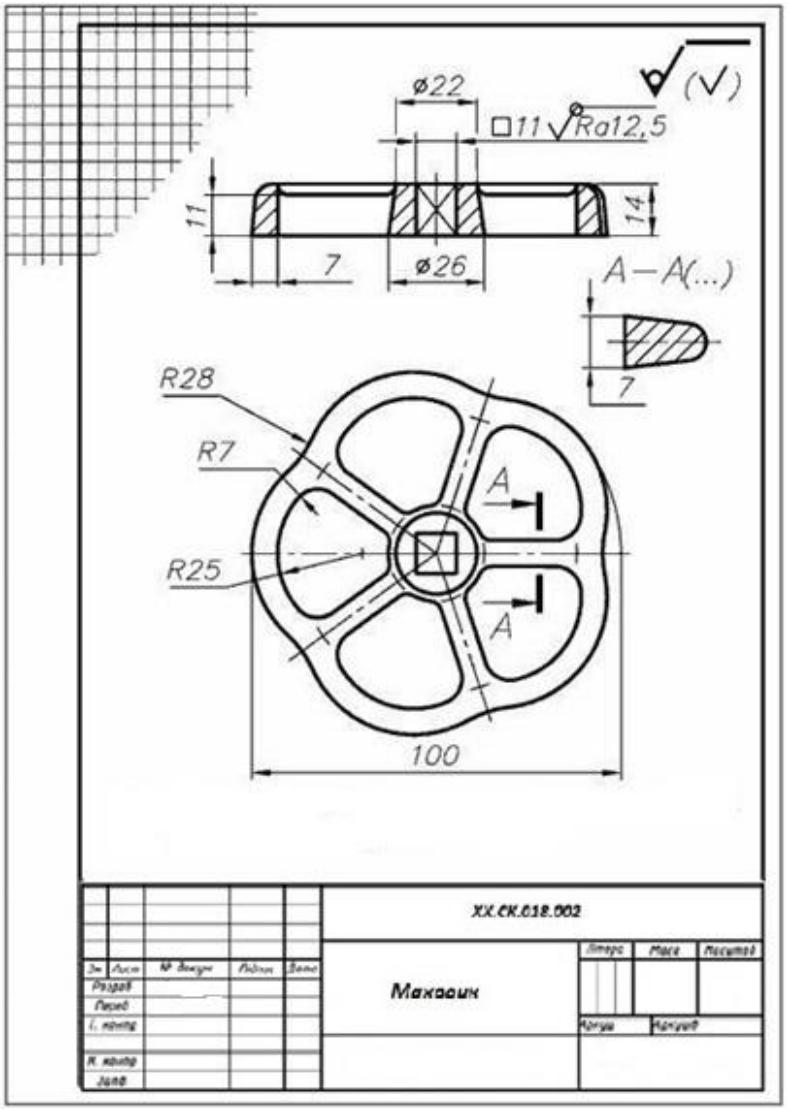

Figure 1.5.45 – Some surfaces are not processed

In production conditions, when manufacturing parts and in educational practice, when performing working drawings and sketches from nature, the surface roughness is determined by comparing it with standard samples that have roughnesses of certain parameters. In the absence of standards, the roughness class is established with sufficient accuracy for educational purposes according to tables available in drawing textbooks. These tables give a relationship between the roughness parameters and the appearance of the surface, the method of its processing, etc. If a sketch or drawing of a part is performed in the process of detailing an assembly drawing or developing a drawing for a new product, the roughness of the surfaces is set based on their purpose, the expected operating conditions and the method of processing.

1.5.16 Designation of materials on drawings

The drawing of the part indicates not only the material, but also its properties after thermal or other types of treatment to which it is subjected, as well as the coatings that ensure the durability of the part. In addition, the drawings contain data on the marking of the product, that is, on the application of certain signs to it that characterize the product and certify its quality.

The materials from which parts of machines, machine tools, and devices are made are assigned alphanumeric designations that are indicated in the main inscription of the drawing. Material designation contains a qualitative description of the material.

Let's consider the brands of ferrous and non-ferrous metals that are most often used.

Gray cast iron (DSTU 8833:2019) has grades: SCh10, SCh15, SCh20, SCh25, etc. The two-digit number indicates the tensile strength MPa x 10-1.

Malleable iron (DSTU EN 1562:2019) has grades: KCh30-6, KCh33-8, KCh35-10, KCh37-12, etc. The first two-digit number indicates the temporary tensile strength in MPa x 10-1, and the second indicates the relative elongation in percent.

Carbon steel of ordinary quality (DSTU 2651:2005), distinguished by mechanical properties, has grades: St0, St1, St2, St3, St4, St5, St6. The number indicates the steel number.

Carbon structural steel of high quality (DSTU 7809:2015) is produced in the following grades: 10, 20, 20G, 25, 25G, 30, 40, 40G, etc. Two-digit numbers indicate the average carbon content in hundredths of a percent, and the letter G indicates an increased manganese content. Example of a conventional designation: **Steel 30** DSTU 7809:2015 **.**

Alloy structural steel (DSTU 12344:2005) has many grades and is used for parts of the appropriate purpose. The most widely used grades are: chromium steel - 20X, 30X; chrome-vanadium steel - 15XF, 20XF; chrome-manganese steel - 18XG, 40XG; chrome-nickel steel - 20XN, 40XN. Example of a conventional designation: **Steel 20XN DSTU 12344:2005.**

Carbon tool steel according to DSTU EN ISO 4957:2007 is produced in the following grades: U7, U8, U8G, U8A, U8GA, U9, etc. The letter U denotes carbon steel, the number - the average carbon content in tenths of a percent, the letter G - increased manganese content and the letter A - high-quality steel. Example of a conventional designation: **Steel U8GA DSTU EN ISO 4957:2007.**

Of the non-ferrous metals and alloys, the most common are copper alloys (bronze and brass) and aluminum alloys (silumin and duralumin).

Foundry tin bronzes are designated in accordance with DSTU 3474-96 . Examples of bronze designations: **Br. OSC 5-5-5 DSTU 613-79; Br. AZ 9-4 DSTU 3474-96.**

Foundry brasses are designated according to DSTU 3473-96. Example of a brass designation: **LC40S DSTU 3473-96.**

Foundry aluminum alloys are designated in accordance with DSTU 2839-94. Examples of conventional designations of aluminum alloys: **AK8(AL34) DSTU 2839-94.**

1.5.17 Measuring tools

Measuring tools used when sketching: metal ruler, calipers, inside gauge, calipers, and for measuring large objects, such as parts of buildings, a folding meter and tape measure are used.

Metal ruler (Fig. 1.5.46a) is used to measure straight sections of a part; it is used when measuring a part with a caliper and an inside gauge.

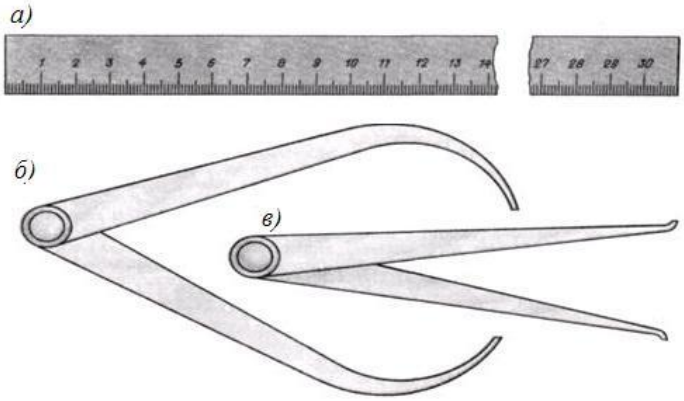

Figure 1.5.46 – Measuring tools

Calipers are used to measure the external dimensions of parts (Fig. 1.5.46b)

The inside gauge (Fig. 1.5.46c) is used to measure the internal diameters of holes t py b etc.

Calipers (Fig. 1.5.47) is used for more accurate measurements and can replace calipers and internal gauges.

Fig. 1.5.47 shows methods for measuring parts.

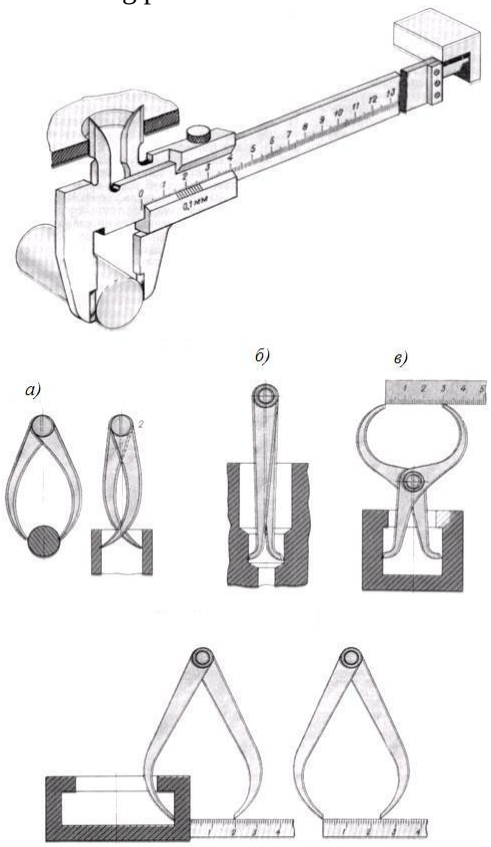

Figure 1.5.47 – Caliper and measurement examples

The size of the numbers usually depends on the scale of the drawing. It is recommended to put numbers on the sketch no less than 3,5 мм.

Dimensional numbers and signs should not be crossed out, crossed out, or separated by any lines or extraneous symbols.

After applying the dimensions, the sketch is traced along the contour without the help of any tools and shaded in the places of cuts.

Chapter 2 Construction of cars

2.1 General structure of wheeled vehicles

Step by step and break down the general structure of wheeled vehicles in detail.

A wheeled vehicle is a machine designed for transporting people or cargo using wheels as the primary means of motion. Despite the great variety (cars, trucks, buses, motorcycles, trailers, military vehicles, etc.), their general structure can be described as a set of fundamental systems and assemblies:

1. Chassis

The chassis is the base structural and functional framework of the vehicle. It includes several key subsystems:

Frame (or load-bearing body):

- Provides the skeleton of the vehicle, onto which all major units are mounted.
- In passenger cars, the frame is often integrated into the body (monocoque or unibody design).
- In trucks, buses, and heavy-duty vehicles, a separate ladder-type frame is common.

Running Gear (wheel system):

- Wheels and tires – provide rolling contact with the ground, ensure traction, cushioning, and stability.
- Suspension system – links wheels to the frame/body, absorbs shocks from road irregularities, maintains ride comfort and handling.
- Axles – transmit torque from the powertrain to the wheels and support the vehicle's load.

Steering system:

- Enables the driver to control the direction of motion.
- Consists of steering wheel, steering column, gear mechanism (rack-and-pinion, recirculating ball), and linkages to the steered wheels.
- Modern systems may use electric or electro-hydraulic power assistance.

Braking system:

- Provides controlled deceleration and stopping.
- Typically includes service brakes (hydraulic or pneumatic, disc or drum), parking brake, and auxiliary/emergency systems.
- Equipped with safety features such as ABS, ESC, brake assist in modern vehicles.

2. Powertrain

The powertrain generates, transmits, and regulates power needed for motion:

Power source (engine or motor):

- Internal combustion engine (ICE): gasoline, diesel, gas.
- Electric motor: battery-electric or fuel-cell systems.
- Hybrid units: combining ICE and electric motors.

Transmission system:

- Transfers torque from engine/motor to the wheels.
- Elements include clutch (or torque converter), gearbox (manual, automatic, CVT, dual-clutch), driveshafts, differential, and final drive.
- In electric vehicles, transmissions are simpler (often single-speed reduction gear).

3. Body (Superstructure)

The body serves as the vehicle's shell and provides space for passengers, cargo, and systems:

- Passenger compartment or cargo area – designed according to function (sedan, SUV, pickup, van, truck cab, bus body, etc.).
- Safety elements – crash zones, airbags, seatbelts, reinforced pillars.
- Aerodynamic shaping – reduces drag, improves efficiency and stability.
- Mounting points – for lighting, mirrors, bumpers, doors, windows.

4. Control and Auxiliary Systems

These enhance drivability, comfort, safety, and usability:

Electrical and electronic systems:
- Battery, alternator, wiring, control units.
- Modern vehicles include multiplexed electronics, CAN-bus systems, and onboard computers.

Fuel or energy system:
- Fuel tank, pumps, injectors, or (for EVs) battery packs, charging equipment, cooling systems.

Cooling and lubrication systems:
- Maintain engine/motor temperature and reduce wear.

Heating, ventilation, and air conditioning (HVAC):
- Provide passenger comfort.

Driver assistance and safety systems:
- ABS, traction control, adaptive cruise control, lane-keeping assist, stability control, etc.

Information and communication systems:
- Dashboard instruments, infotainment, navigation, telematics.

5. Special Equipment (Optional)

Depending on purpose, vehicles may have:
- Cargo handling devices (cranes, tail lifts).
- Military armor, weapon systems.
- Emergency systems (sirens, firefighting equipment).
- Off-road enhancements (winches, reinforced suspension).

A wheeled vehicle generally consists of chassis (frame, suspension, wheels, steering, brakes), powertrain (engine/motor and transmission), body (passenger or cargo), and control/auxiliary systems (electronics, HVAC, safety, infotainment). Each subsystem integrates to form a functional unit capable of safe, efficient, and comfortable movement. Each of the systems and nodes will be considered in more detail in the subsections below.

2.2. General structure and principles of operation of internal combustion engines.

2.2.1. Classification of automobile engines.

An internal combustion engine (ICE) is a thermal power unit in which the heat of gases burning in the working chamber is converted into mechanical work.

Automobile engines can be classified according to the following features.

1.Method of converting thermal energy into mechanical work:
- piston engines;
- rotary-piston engines;
- gas turbine engines.

2.Method of mixture formation:
- external mixture formation (Otto cycle);
- internal mixture formation (Diesel).

3.Method of performing the working cycle:
- four-stroke;
- two-stroke;
- continuous.

4.Type of fuel:
- engines running on light liquid fuel (gasoline);
- engines running on heavy liquid fuel (diesel fuel);
- engines running on gaseous fuel (compressed and liquefied gases).

5.Method of mixture ignition:
- engines with spark ignition (Otto);
- engines with compression ignition (Diesel).

6.Number and arrangement of cylinders:
- single-cylinder and multi-cylinder;
- single-row engines (vertical and horizontal);
- double-row engines (V-shaped, opposed);
- VR, W-shaped.

7.Cooling method:
- liquid;
- air.

The most widespread in automobiles are piston gasoline and diesel engines.

Advantages of diesels over gasoline engines:
- high efficiency;
- use of cheaper fuel;
- lower fire hazard;
- greater reliability in operation due to the absence of an ignition system;
- low corrosive ability of fuel.

Disadvantages of diesels:
- increased weight and size per unit of power;
- high cost due to increased metal consumption and high precision of fuel equipment manufacturing;
- complicated starting at low temperatures;
- noisier and harsher operation.

2.2.2. Piston internal combustion engine

The engine consists of the crank mechanism, the valve timing mechanism, and the cooling, fuel supply, lubrication, ignition, and starting systems.

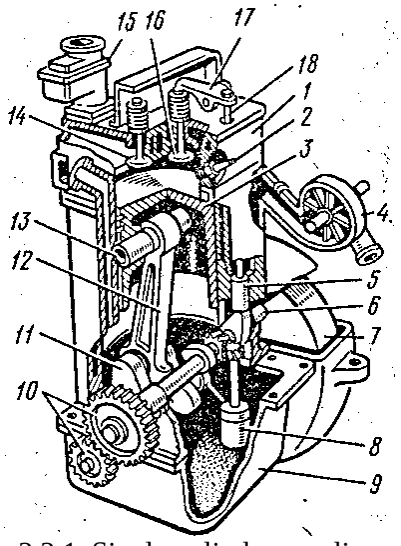

Figure 2.2.1. Single-cylinder gasoline engine

The main part of the crank mechanism (Fig. 2.2.1) is the cylinder, along the axis of which piston 3 with rings moves. By means of piston pin 13, piston 3 is connected to the upper head of connecting rod 12. The lower head of the connecting rod is mounted on crankshaft 11. The cylinder is closed at the top by head 1, and at the bottom is joined with the crankcase and oil sump 9. On the rear end of the crankshaft a flywheel 7 is mounted, and on the front end – gear 10. The latter drives the valve timing mechanism, which consists of camshaft 6 with cams, tappets 5, push rods 18, rocker arms 17, intake valve 14, and exhaust valve 16.

The engine fuel system includes carburetor 15, in which the fuel-air mixture is prepared. The carburetor is mounted on the intake manifold, which is connected with the intake valve 14 port. The exhaust manifold is connected with the exhaust valve 16 port.

One of the main parts of the cooling system is water pump 4. It directs coolant into the cavity (water jacket), which surrounds the most heated parts of the engine.

The lubrication system operates from pump 8, which is driven by a gear. Oil from sump 9 is supplied to the friction surfaces through a pipeline.

To ensure forced ignition of the combustible mixture, the ignition system is used. Ignition occurs from an electric spark that arises between the electrodes of spark plug 2.

The basic design of the diesel engine is similar to that of the gasoline engine. Diesels differ by the absence of the ignition system and by modification of the fuel system.

2.2.3. Rotary-piston engines.

Rotary-piston engines (RPE) operate on the same cycle as gasoline engines, but they have a completely different design.

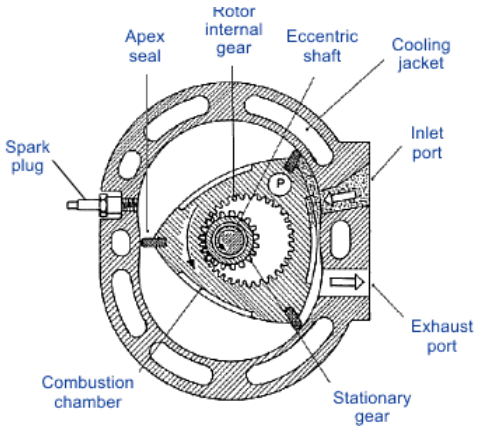

Figure 2.2.2. Rotary–piston engine (Wankel Engine)

The RPE consists of a stationary housing with cooling jacket (Fig. 2.2.2). The walls of the working surface of the housing are made according to a special epitrochoid curve. In the end walls of the housing, bearings are installed in which the eccentric working shaft rotates. The rotary piston (a triangle with arc-shaped sides) is freely mounted on the shaft. During operation, the vertices of the rotary piston continuously touch the walls, forming three separate moving crescent-shaped chambers.

In the RPE, instead of valves, there are intake and exhaust ports, which are opened and closed by the edges of the rotary piston.

The rotary piston is rigidly connected with gear of internal engagement, which during engine operation rolls around the centrally located gear. For one revolution of the rotary piston, the eccentric shaft, connected to the clutch, makes three revolutions. The unbalanced inertia forces of the rotating masses are compensated by two counterweights on the eccentric shaft.

The RPE has the following advantages:

- simplicity of design;
- smaller dimensions and size per unit of power;
- absence of reciprocating motion parts;
- high rotational speed;
- better balance;
- smoother operation;
- lower operating noise.

Disadvantages of the RPE:

- difficulty in ensuring sealing between the rotary piston and the housing;
- low reliability;
- low fuel efficiency;
- increased toxicity of exhaust gases.

2.2.4. Gas turbine engines.

A gas turbine engine converts the kinetic energy of gases into mechanical work. The gas turbine engine consists of: a compressor, where air compression takes place; a combustion chamber, where compressed air and fuel (kerosene) are mixed and the formed combustible mixture burns; a turbine, where the thermal energy of expanding gases is converted into mechanical work.

The automobile gas turbine engine consists (Fig. 2.2.3) of compressor 12, combustion chamber 3, compressor turbine 10, and power turbine 9. The power turbine 9 is connected through shaft 7 to the automobile transmission. The compressor turbine 10 is connected through shaft 11 to the impeller 1 of compressor 12.

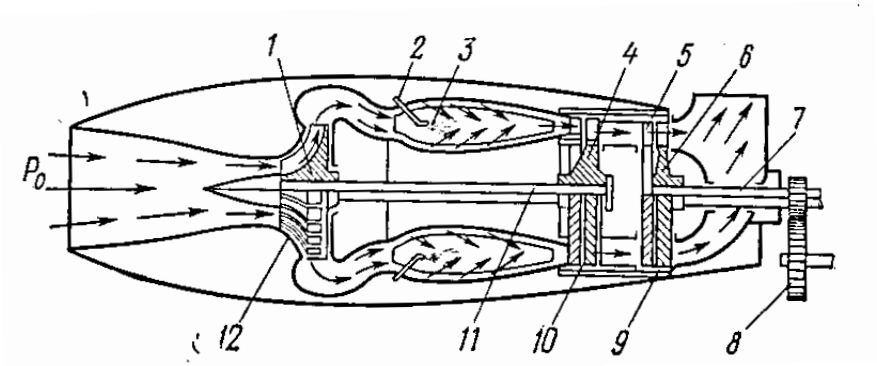

Figure 2.2.3. Automobile gas turbine engine

Such a two-shaft gas turbine engine has gained predominant use in automobiles. In addition to the main elements mentioned, the gas turbine engine has a speed governor, oil pump, starter, and other auxiliary equipment.

The gas turbine engine operates as follows. Shaft 11 of compressor 12 is spun up by the starter. The starting rotational speed is 25% of the nominal. The compressor supplies compressed air to combustion chamber 3, and through nozzle 2 fuel is supplied, which mixes with air, is ignited by an electric spark, and burns. The combustion products spin turbine 10, the compressor, and associated auxiliary mechanisms. Final

expansion of the combustion products takes place in power turbine 9. The mechanical energy obtained is used to move the automobile. Exhaust gases exit the turbine into the atmosphere through the exhaust pipe.

The gas turbine engine has no reciprocating parts, which allows the rotational speed to increase up to 25,000 rpm. The number of friction pairs is minimized, which simplifies the lubrication system and significantly reduces oil consumption compared to a piston engine. The mechanical efficiency factor is 0.9–0.95. The continuity of the combustion process allows for an increase in the specific power of the engine.

Advantages of the gas turbine engine:

- high starting qualities;
- low toxicity of exhaust gases;
- complete balance;
- no need for a clutch, which significantly simplifies the transmission.

Disadvantages of the gas turbine engine:

- low efficiency at nominal mode;
- high air consumption per unit of power;
- strict requirements for air cleanliness;
- sharp decrease in efficiency when operating at partial loads;
- impossibility of braking the automobile with the engine;
- risk of power turbine overspeed when shifting gears;
- high noise level.

2.2.5. Working process of a four-stroke engine.

The operation of the engine is associated with the following parameters. The two extreme positions of the piston are called top dead center (TDC) and bottom dead center (BDC) (Fig. 2.2.4).

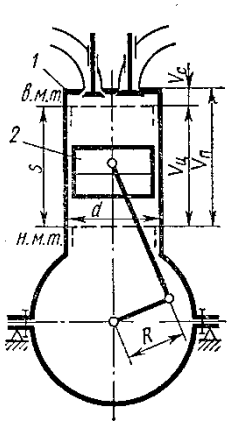

Figure 2.2.4. Diagram of a piston engine

At the extreme positions, the piston velocity is zero, because its direction of motion changes at these points. The distance between TDC and BDC is called the piston stroke S.

The part of the engine's operation during which the piston moves from one dead center to the other is called a stroke. The period during which a complete process of converting thermal energy into mechanical work occurs in the cylinder is called the engine working cycle. The working cycle consists of working and auxiliary strokes. The number of strokes is two or four.

The combustion chamber volume Vc is the volume above the piston when it is at TDC. The cylinder displacement volume Vh is the volume displaced by the piston as it moves from TDC to BDC. The total cylinder volume Va is the volume above the piston when it is at BDC.

$$V_a = V_h + V_C$$

Compression ratio ε – the ratio of the total cylinder volume Va to the combustion chamber volume Vc, that is

$$\varepsilon = \frac{V_a}{V_C}$$

The compression ratio ε affects the power and efficiency of the engine. The higher the ε, the more powerful and efficient the engine.

For a gasoline engine, ε = 7–10.

For a diesel engine, ε = 14–21.

2.2.6. Parameters of the strokes of the working process.

The working process of a four-stroke gasoline engine consists of four strokes.

1. Intake of the combustible mixture.
2. When the piston moves downward, the intake valve is open, and the exhaust valve is closed.
3. Compression of the mixture.
4. The piston moves upward, compressing the mixture with the valves closed. At this moment, a spark jumps between the spark plug electrodes, igniting the mixture.
5. Combustion of the mixture and expansion (power stroke). Under the pressure, the piston moves downward and, via the connecting rod, rotates the crankshaft, performing mechanical work.
6. Exhaust. The stroke begins as the piston approaches BDC when the exhaust valve opens. Then the piston moves upward, pushing the combustion products into the exhaust manifold through the exhaust valve.

The working process of a four-stroke diesel engine proceeds similarly to that of a gasoline engine.

The difference is that the cylinder receives not a combustible mixture, but pure air, which heats up during compression. The fuel injected at the end of the compression stroke ignites spontaneously due to the high temperature of the air.

2.2.7. Main engine parameters.

The operation of an engine is characterized by three main parameters:

- power;
- torque;
- specific fuel consumption.

For automobile engines, η_m = 0.75–0.9.

The engine's liter power N_l (kW/l) allows assessing the engine design quality. For gasoline engines – N_l = 50–60 (kW/l); for diesels – N_l = 25–35 (kW/l).

The effective torque M_e (N·m) allows evaluating the engine's traction characteristics.

The effective specific fuel consumption g_e (g/(kW·h)) is an indicator of engine efficiency. For diesels, g_e = 190–230 (g/(kW·h)); for gasoline engines, g_e = 220–300 (g/(kW·h)).

An automobile engine operates under variable load conditions, so the engine power must correspond to the required value.

To assess the technical and economic performance of engines under different conditions, engine characteristics are used.

The engine speed characteristic represents the dependence of effective power N_e, effective torque M_e, hourly fuel consumption G_m, and specific effective fuel consumption g_e on the crankshaft rotational speed n_e (Fig. 2.2.5).

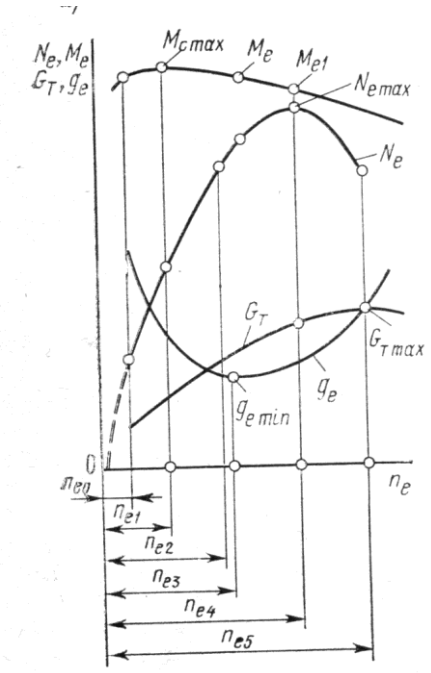

Figure 2.2.5. Engine speed characteristic

The external speed characteristic of the engine corresponds to a fully open throttle or maximum fuel supply.

Partial speed characteristics of the engine are obtained with incomplete fuel supply or partially opened throttle.

2.2.8. Crank–connecting rod mechanism

The crank–connecting rod mechanism (CCM) converts the linear reciprocating motion of the pistons, which perceive the gas pressure, into the rotational motion of the crankshaft.

The parts of the crank–connecting rod mechanism are divided into moving and stationary.

Moving parts:

- piston with rings and piston pin;
- connecting rod;
- crankshaft and flywheel.

Stationary parts:

- cylinder block;
- cylinder head;
- oil sump (crankcase).

The most common layouts of crank–connecting rod mechanisms are shown in Fig. 2.2.6.

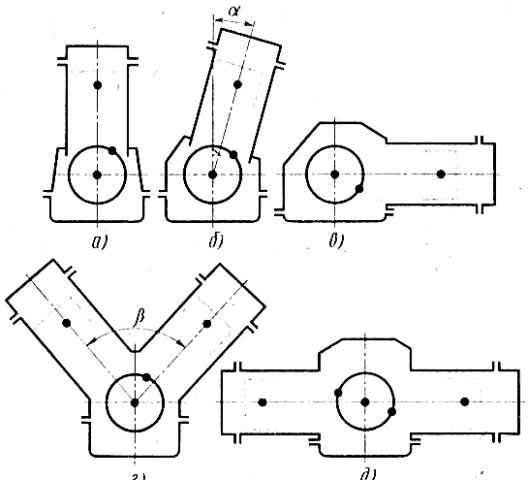

Figure 2.2.6. Crank–connecting rod mechanism layouts

In single-row cylinder arrangements, their axes can occupy vertical (a), inclined (b), and horizontal (c) positions. In double-row cylinder arrangements, V-shaped (d) and opposed (e) layouts are used. There are also inline–V engines (VR5, VR6) and their combinations (W8, W12).

2.2.8.1 Cylinder block

The cylinder block, or block–crankcase, is the engine's backbone (Fig. 2.2.7).

The main mechanisms and engine system components are located on it and inside it. The cylinder block is a complex box-shaped casting.

The cylinder block is cast from alloyed gray cast iron, special high-strength cast iron, or aluminum alloy.

After casting, the block undergoes artificial aging, which reduces its warping during operation and ensures the preservation of its correct geometric shape.

The cylinder block can be cast together with the cylinders or have replaceable cylinder liners.

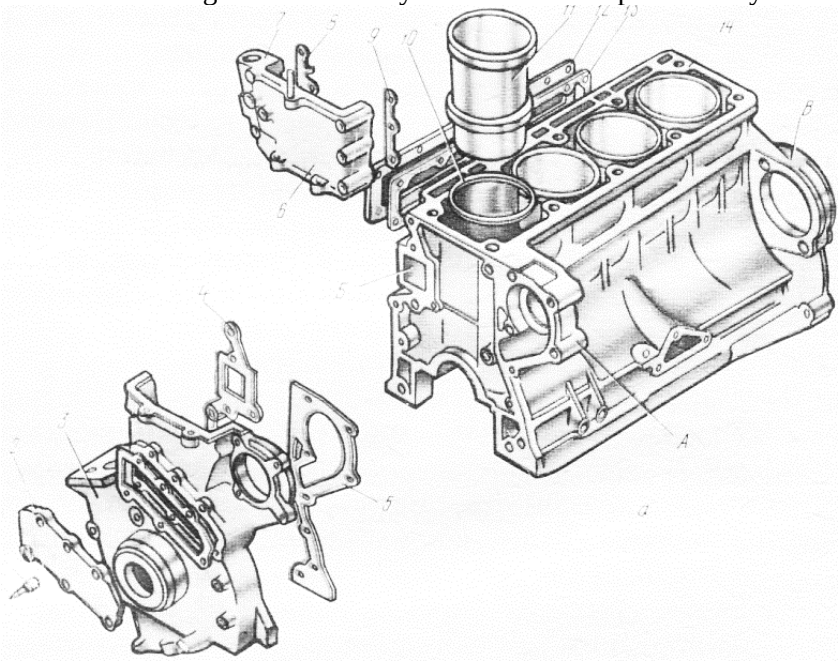

Figure 2.2.7. Stationary parts of the crank–connecting rod mechanism

Cylinder liners

Liners can be wet or dry (Fig. 2.2.8). A wet liner 5 with insert 4 is washed by the coolant. It is sealed with a rubber ring 6. Dry liners 2, 3 do not directly contact the coolant and can be installed along the full length of the cylinder or only in the upper part of the cylinder.

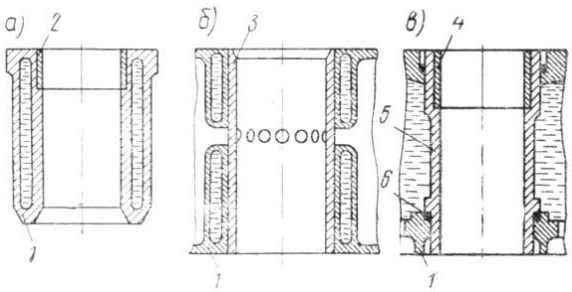

a b c

Figure 2.2.8. Cylinder liners:
a – dry, short; b – dry; c – wet

Cylinder liners are cast from special cast iron and installed in the cylinder block. Engines with replaceable wet liners are easier to repair and maintain.

A solid cylinder block is more difficult to repair because, in the event of a failure (due to scoring) of one cylinder, all cylinders must be bored and honed. However, such a block has greater rigidity.

The inner surface of the cylinder, along which the piston moves, is called the cylinder bore. This surface is hardened with high-frequency currents (HF) and carefully processed to increase wear resistance and longevity, as well as to reduce friction between the piston with rings and the cylinder.

Liners are installed to prevent coolant from entering the oil sump or the liners themselves, and to prevent gases from escaping the cylinder. The possibility of changing the liner length depending on engine temperature is provided. A disadvantage of using wet liners is the reduction in block–crankcase rigidity. Wall thickness: wet liners – 6–8 mm; dry liners – 2–4 mm.

2.2.8.2. Cylinder head

The cylinder head is a cover that closes the cylinders and is cast from gray cast iron or aluminum alloy (Fig. 2.2.9).

The cylinder head contains recesses which, together with the piston and cylinder walls, form the combustion chamber, cavities for coolant or fins (for air-cooled engines), holes for spark plugs or injectors, as well as intake and exhaust channels. The design of the cylinder head depends on the shape of the combustion chamber and the arrangement of the valves.

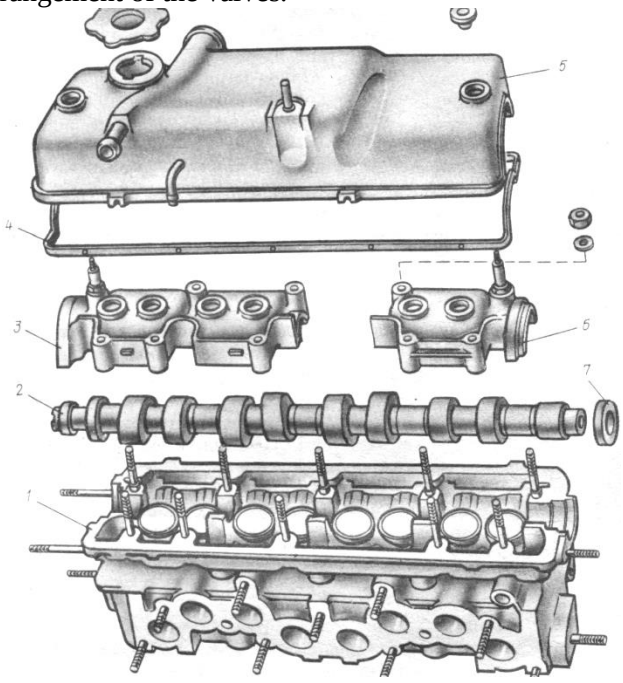

Figure 2.2.9. Cylinder head

In gasoline engines, the following types of combustion chambers are possible (Fig. 2.2.10):
a) tent-shaped;
b) cylindrical;
c) wedge-shaped;
d) L-shaped with a lower valve arrangement.

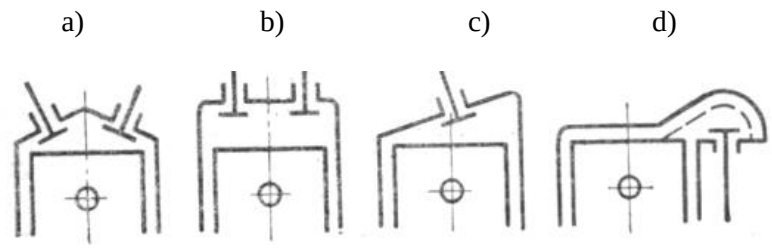

Figure 2.2.10. Combustion chamber shapes of gasoline engines

Possible combustion chamber shapes for diesel engines are shown in Fig. 2.2.11.

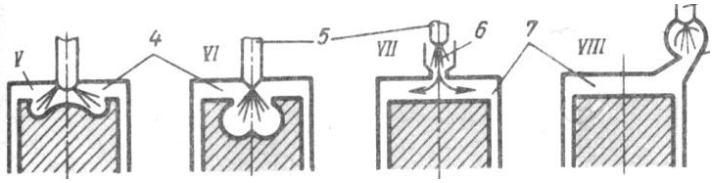

a) b) c) d)

Figure 2.2.11. Combustion chamber shapes of diesel engines:
a, b – undivided; c, d – divided

During engine operation, the cylinder head experiences significant forces from gas pressure and thermal stresses. Therefore, it must have high strength and rigidity with a relatively low weight.

A cylinder head made of aluminum alloys is lighter than a cast-iron one and provides better heat dissipation. This allows increasing the compression ratio in gasoline engines, and accordingly, the engine's power and efficiency.

2.2.8.3. Connecting rod–piston group

The CCM also includes the piston group (piston, piston pin, piston rings, fastening parts) (Fig. 2.2.12) and the connecting rod group (connecting rod, bushings, bearings), the crankshaft with flywheel, all located inside the engine housing.

The piston group, together with the cylinder walls and the combustion chamber surface, forms the space above the piston, where the engine's working processes occur. This group must ensure the tightness of this space, effective heat transfer to the cylinder walls, minimal friction losses, and prevent oil from the crankcase from entering the combustion chamber.

Piston

The piston is designed to withstand forces from gas pressure during expansion and transmit them through the connecting rod to the crankshaft.

In two-stroke engines, the piston also functions as a slide valve of the gas distribution mechanism.

During engine operation, the piston moves at high speeds (10–35 m/s) and is exposed to high pressures (5–8 MPa) and temperatures (up to 2500 °C), requiring high strength and rigidity.

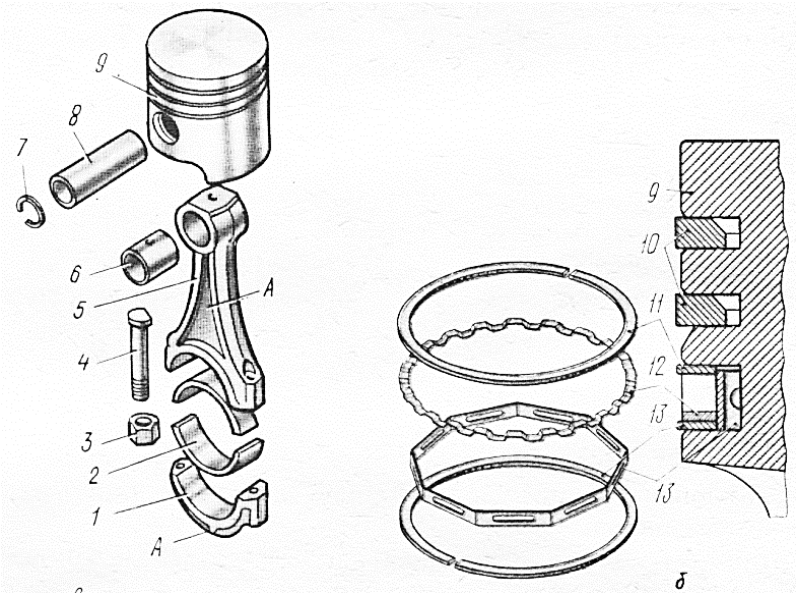

Figure 2.2.12. Connecting rod–piston group:
a – piston with connecting rod; b – installation of piston rings; 1 – connecting rod cap, 2 – connecting rod bearings, 3 – nut, 4 – bolt, 5 – connecting rod, 6 – bushing of the upper connecting rod end, 7 – retaining ring, 8 – piston pin, 9 – piston, 10 – compression rings, 11 – ring segments of the oil scraper ring, 12 – axial expander, 13 – radial expander

The piston must also have low mass, good thermal conductivity, wear resistance, and anti-friction properties.

Pistons are mainly made from aluminum alloys with an increased silicon content. All pistons undergo heat treatment (hardening and aging) to ensure dimensional and shape stability.

The piston consists of a crown with a crown top, grooves for piston rings, a guiding part (skirt), and bosses.

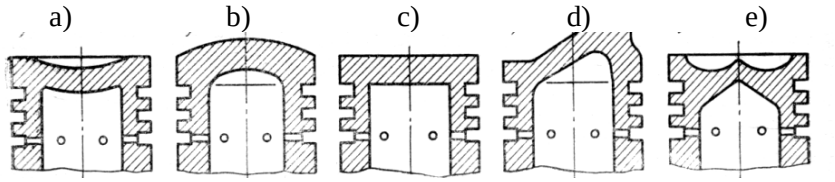

Figure 2.2.13. Piston crown shapes

The piston crown can have any specific shape, depending on the combustion chamber design and valve arrangement.

A concave crown (a) (Fig. 2.2.13) provides the best conditions for fuel mixture combustion but has an increased surface area exposed to hot gases, a higher likelihood of carbon deposits, reduced strength, and more complex manufacturing. A convex crown (b) has increased strength, allowing a reduction in piston mass, but results in poorer combustion conditions and higher heating of the piston crown. A flat crown (c) is simple to manufacture and experiences the least heating during engine operation. It is most common in gasoline engines.

Complex shapes (d, e) are typical in diesel engines and depend on compression ratio, mixture formation method, injector placement, and other factors.

The piston crown includes part of the piston's lateral surface with grooves for piston rings and ensures the sealing of the combustion chamber and heat transfer from the piston crown (Fig. 2.2.12).

The guiding part of the piston includes the lateral surface of the piston from the last piston ring to the end of the piston. The skirt directs piston movement in the cylinder and transmits lateral forces to the cylinder wall. The piston skirt must maintain minimal clearance between the piston and cylinder wall, both when hot and cold.

To prevent piston knocking, tilting in a cold state, and seizing during operation, pistons made of light alloys are designed with U- or T-shaped cuts, giving the skirt an oval cross-section with a larger dimension perpendicular to the piston pin axis. In some pistons, the skirt has a truncated conical shape, providing elastic properties and reducing the clearance between piston and cylinder.

To reduce heat transfer from the piston crown to the skirt, a horizontal groove is cut between them. To increase the strength of light-alloy pistons and limit thermal expansion, special invar or steel inserts are installed in the crown.

On the inner side of the skirt, there are two massive bosses connected to the crown by ribs, increasing piston strength and improving heat dissipation to the piston rings and cylinder coolant. The bosses have holes for the piston pin and machined grooves for retaining rings. To reduce impact forces when the piston passes TDC during combustion-expansion, the piston pin hole axis is offset 1–2 mm toward the most loaded side. To reduce piston mass and allow crankshaft counterweights to pass at the piston's lower positions, the non-working part of the skirt is cut out.

Piston rings

Piston rings prevent gases from escaping the combustion chamber into the engine crankcase, transfer heat from the piston crown to the cylinder walls, and prevent oil from entering the combustion chamber. The number of piston rings depends on cylinder gas pressure and engine speed (2–4 rings in high-speed gasoline engines, up to 7 in low-speed powerful two-stroke engines).

There are two types of piston rings (Fig. 2.2.14):

- Compression rings
- Oil scraper rings

Compression rings seal the space above the piston. Tight contact is ensured by the ring's elasticity and the pressure of gases that penetrate behind the rings. The design of compression rings must provide proper

sealing, reduce end-face stress, and minimize wear. It is determined by the ring's cross-sectional shape and the lock design.

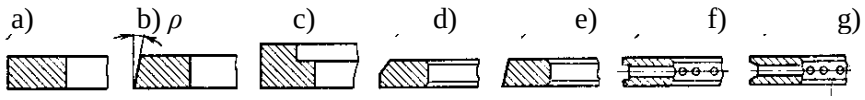

Figure 2.22.14. Section shapes of compression and oil scraper piston rings

Rectangular section rings (Fig. 2.2.14, a) are simple to manufacture, but they take a long time to wear in.

When using rings with a trapezoidal section (b), the possibility of seizing in the grooves and burning is eliminated.

The shaped form (c) allows the ring to twist when compressed and take a conical shape, as a result of which its lateral surface touches the cylinder wall with a narrow strip, which accelerates the bedding of the ring and reduces oil consumption.

Oil scraper rings (d–j) are intended for regulating the supply of oil to the lateral surface of the piston and to the compression rings, removing residual oil from the cylinder walls, and directing it to the engine crankcase.

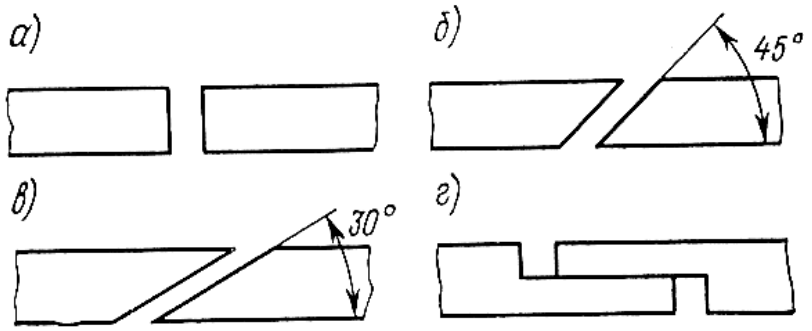

Figure 2.2.15. Piston ring locks

The piston ring lock may be straight (a), angled (b, c), or stepped (d) in shape (Fig. 2.2.15). The most widespread are rings with a straight lock, which is the simplest to manufacture.

Common are assembled oil scraper rings (Fig. 2.12), which consist of two steel ring discs 11 and two expanders – axial 12 and radial 13. Piston rings are made of steel or alloyed cast irons with chromium, nickel, copper, tungsten, molybdenum additives.

The working surfaces of the rings are coated with porous chromium, molybdenum, or subjected to electrolytic tinning, oxidation, phosphating, which increases wear resistance and corrosion resistance, and also accelerates surface bedding.

Piston pin

The piston pin 8 (Fig. 2.2.12) is designed for the hinged connection of the piston with the connecting rod.

The piston pin operates under alternating impact loads at high temperatures and poor lubrication conditions, so it must have high strength, low mass, increased wear resistance of the working surface, and good resistance to impact loads.

Piston pins are made from carbon and alloy steels, which undergo heat treatment. The external surface of the pins is ground and polished. The piston pin has a tubular section. The design of the piston pin depends on the type of connection with the piston bosses and the upper connecting rod head.

Piston pins are classified as:

- fixed in the connecting rod head and movable in the piston bosses (or vice versa);
- floating – movable in both the piston bosses and the connecting rod head.

Floating pins are the most common: they wear slightly and evenly along the length and circumference, and are convenient for assembly.

To prevent axial displacement of a floating piston pin, spring rings 7 or plugs are used.

Connecting rod

The connecting rod group converts the reciprocating motion of the piston into the rotational motion of the crankshaft.

The connecting rod group (Fig. 2.2.12) includes: connecting rod 5, bushings 6, bearings 2, bolts 4 or studs with nuts 3. During engine operation, the connecting rod performs complex movements and is subjected to variable forces in magnitude and direction from gas pressure and inertia of reciprocating parts. Therefore, the components must be strong and rigid with a relatively low structural mass. The connecting rod consists of an upper head, shank, and lower head. The upper head is non-detachable. Its design depends on the method of fastening the piston pin and lubrication conditions. When using a floating pin, its bearing is a bronze or brass bushing pressed into the upper head. Lubrication of the bushing is done by splashing. Pressure lubrication is used only in engines operating under increased load on the piston pins.

The connecting rod shank usually has an I-beam cross-section, providing high strength and rigidity at relatively low mass.

The lower head of the connecting rod is detachable. It must have high rigidity, minimal dimensions determining the crankcase contours, and low mass. The removable part (cap) is fastened to the rod body with bolts and nuts. To increase strength and rigidity, the cap is made with ribs and thickening of various shapes. Connecting rods are stamped from carbon and alloy steels with subsequent mechanical and heat treatment.

Connecting rod bolts and nuts are made of high-quality alloy steels. Sliding bearings are installed in the lower head of the connecting rod, which are thin-walled bimetallic inserts. The use of steel-aluminum inserts with a thin antifriction layer ensures reliable bearing operation at a small clearance between the crankshaft journals and the inserts.

To prevent axial displacement and rotation, the inserts are held in their seats by tabs that fit into grooves.

The joint of the lower connecting rod head may be perpendicular or at an angle to the rod axis.

2.2.8.4. Crankshaft

The crankshaft perceives loads from gas pressure forces and inertia forces of the reciprocating and rotating masses of the C.R.M. and transmits torque to the power transmission, as well as to various units and auxiliary mechanisms.

The crankshaft must be strong, rigid, wear-resistant at relatively low mass, simple in design, and manufactured with high precision.

The crankshaft consists of (Fig. 2.2.16): main 2 and connecting rod 3 journals, cheeks 7 with counterweights 8, snout 1 (front end), and tail 6 (rear end).

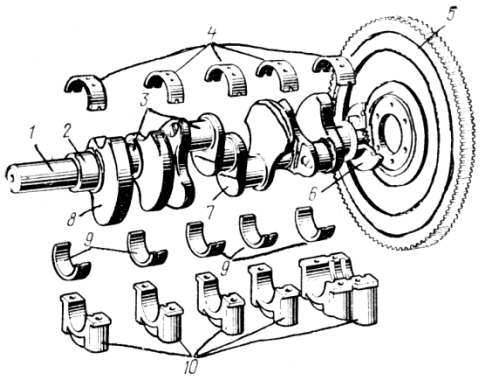

Figure 2.2.16. Crankshaft assembly

On the snout of the crankshaft, an oil seal, ratchet, timing gear, generator drive pulley, fan, and torsional vibration damper are installed. Sliding bearings with thin-walled inserts 4 are installed on the main and connecting rod journals. Axial forces of the crankshaft are absorbed by thrust washers. At the rear end of the crankshaft, a cast-iron flywheel 5 is mounted.

The front and rear ends of the crankshaft, which extend out of the block, are sealed with rubber oil seals.

To reduce torsional vibrations of the crankshaft, a torsional vibration damper may be installed on the front end, which reduces these vibrations through internal friction.

Flywheel and crankcase

The flywheel is a massive disc cast from cast iron. It increases the uniformity of crankshaft rotation and transmits torque to the vehicle transmission. A steel toothed ring is pressed onto the flywheel rim, designed to rotate the crankshaft with the starter when starting the engine. In some engines, marks are applied or a steel ball is pressed into the flywheel, which is used to set the first cylinder piston at TDC and check the ignition timing.

To damp torsional vibrations, pulleys with vibration dampers or dual-mass flywheels are used (Fig. 2.2.17).

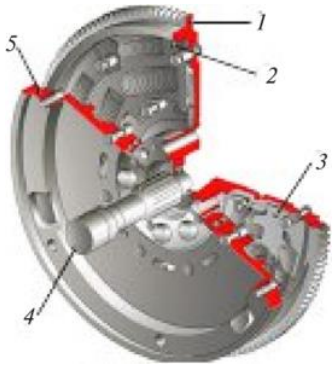

Figure 2.2.17. Dual-mass flywheel
1 – Primary flywheel; 2 – Outer torsional vibration damper; 3 – Inner torsional vibration damper; 4 – Primary shaft; 5 – Secondary flywheel

The oil pan protects the crankcase from dirt and serves as a reservoir for oil. The pan is manufactured by stamping or casting from aluminum alloys. It is fastened with bolts and sealed with a gasket. The pan is positioned below the crankshaft axis to increase crankcase rigidity.

The engine suspension is made at two to five points. The engine is mounted using special brackets and rubber or shock-absorbing mounts, which reduce vibrations of the power unit caused by irregular torque and engine imbalance.

2.2.9. Valve Timing Mechanism

2.2.9.1. Purpose of the Valve Timing Mechanism

The valve timing mechanism (VTM) is designed to intake the fuel mixture into the engine cylinders and exhaust the combustion gases according to the cylinder firing order. For this purpose, engines have intake and exhaust valves operated by the camshaft.

The valves of the valve timing mechanism are located in the cylinder head.

When the camshaft is located in the cylinder head, its cams act on the valves 17 through rocker arms 9 (Fig. 2.2.18). The camshaft is driven by the crankshaft. During two rotations of the crankshaft, the camshaft completes one rotation. The camshaft is driven via a toothed belt or chain drive.

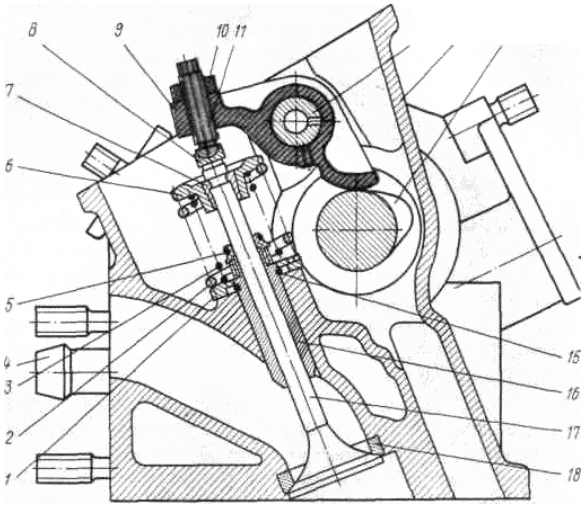

Figure 2.2.18. Engine valve timing mechanism:
1 - Support washer, 2, 3 — Springs, 5 — Valve oil deflector cap, 6 — Valve spring retainer, 7 — Valve locks, 8 — Rocker arm adjusting screw tip, 9 — Rocker arm, 10 — Lock nut, 11 — Rocker arm adjusting screw, 12 — Rocker arm shaft, 13 — Cylinder head, 14 — Camshaft lobe, 15 — Retaining ring, 16 — Guide bushing, 17 — Valve, 18 — Valve seat.

To ensure the correct valve timing phases — the opening and closing moments of the valves — the alignment marks C and D on the camshaft and E and F must coincide and be oriented as shown in Fig. 2.2.19.

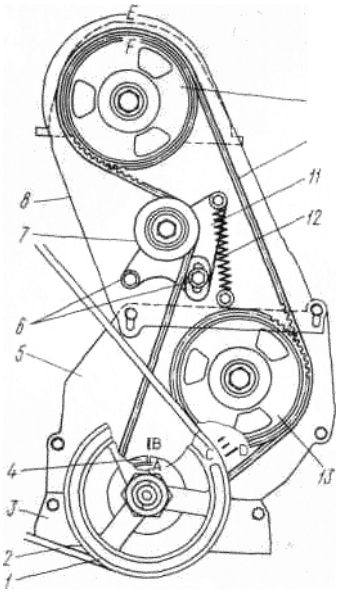

Figure 2.2.19. Engine valve timing drive diagram:
1 - Crankshaft pulley, 2 - Fan belt, 3, 5, 8 - Protective covers, 4 - Crankshaft timing pulley, 6 - Bolts for tensioner bracket, 7 - Tensioner pulley, 9 - Camshaft pulley, 10 - Timing gear belt, 11 - Tensioner bracket, 12 - Bracket spring, 13 - Oil pump shaft pulley

2.2.9.2. Camshaft

The camshaft (Fig. 2.2.20) serves to control the motion of the valves. The shaft has main bearings 1, intake cam lobes 2, exhaust cam lobes 4, and a gear 5 for driving the oil pump and ignition distributor. The positioning of the cam lobes is determined by the valve arrangement, specified valve timing phases, and engine firing order. The camshaft is mounted in the bearings of the engine block or in a special housing on the cylinder head (for overhead camshaft designs). The number of camshaft bearings usually equals the number of crankshaft bearings. The main bearing supports consist of cast iron or bronze bushings, or bushings made of bimetallic strips.

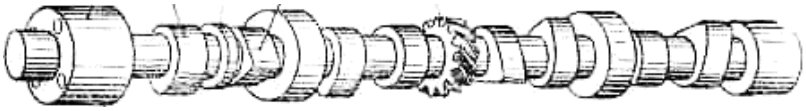

Figure 2.2.20. Camshaft

The operation of the valve timing mechanism is largely influenced by the cam profile, which is usually convex, ensuring optimal cylinder filling with minimal inertial forces.

A central oil channel passes through the body of the camshaft, sealed at the ends with plugs. From this channel, oil passages are drilled to supply oil to the cam surfaces.

2.2.9.3. Valves

Valves are designed for the periodic opening and closing of the intake and exhaust ports in the cylinders and for their reliable sealing. Valves operate under severe conditions, subjected to high temperatures, gas pressures, spring forces, and the inertia of mechanism components. The most demanding period is the exhaust of combustion gases, during which valve temperatures can reach 600–850 °C. Modern four-stroke engines typically have two to four valves per cylinder.

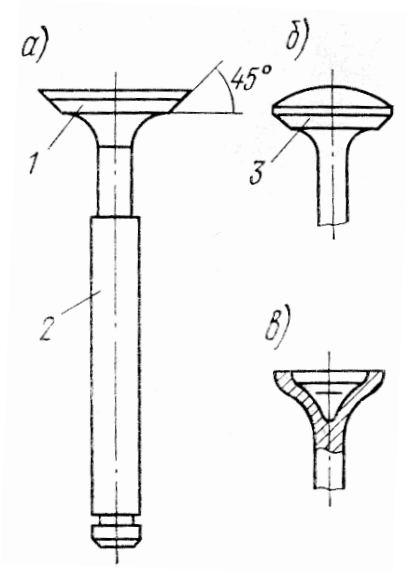

Figure 2.2.20. Valves

A valve consists of a stem 2 and a head 1 (Fig. 2.2.20, a), connected by a smoothly shaped transition, which helps reduce resistance to gas flow when the valve is open. The valve head forms part of the combustion chamber surface, and its shape determines the strength of the working surface, hardness, mass, and aerodynamics. The head can be flat (dish-shaped) a, convex b, or tulip-shaped c.

The valve head has a working surface designed to close the intake or exhaust ports. For a tight fit of the valve head, its working surface is made conical. The working bevel angle 3 of valves is usually 45°, while in some engines, the intake valves have an angle of 30°.

The valve stem is cylindrical and guides the valve motion. The stem diameter depends on the transmitted loads and ranges from 5–10 mm, while the length depends on the valve location. At the end of the valve stem, the spring retainer is mounted.

Valves can be manufactured by stamping or by butt welding when making heads and stems from different materials.

2.2.9.4. Valve Mechanism Components

Valve seats are intended to extend the service life of the supporting surface on which the valve rests. For exhaust valves, seats are usually insertable in the form of round shaped rings. Seats are made from heat-resistant cast iron, alloy steels, metal-ceramics, or aluminum bronze.

Guide bushings prevent valve misalignment when seated and aid in heat dissipation from the valves. Bushings are always insertable, simplifying maintenance. Axial movement of the bushings is limited by support collars or spring rings. Bushings are made from bronze, pearlitic cast iron, or metal-ceramic alloys.

Valve springs must provide sufficient valve seating force, withstand inertial loads from the motion of the valve mechanism parts, and are usually helical with constant or variable pitch. Variable pitch prevents resonance vibrations.

Lifters transmit force from the camshaft lobes to the valve stems or pushrods and absorb lateral forces arising from cam rotation. Lifters can be dish-shaped, cylindrical, roller, or hydraulic (Fig. 2.2.23). The friction surface of the lifter where it contacts the cam lobe is spherical to reduce friction. For more uniform wear of the lifter face, its axis is offset relative to the cam axis (for flat lifter surfaces), or the cam is made conical (for spherical lifter surfaces).

2.2.9.5. Valve Timing

Valve timing refers to the moments of opening and closing the valves, expressed in degrees of crankshaft rotation relative to the top and bottom dead centers (Fig. 2.2.21). Timing is determined experimentally during engine design, depending on engine speed and the design of intake and exhaust systems. The intake valve opens with advance at the end of the exhaust stroke, before the piston reaches TDC, and closes with delay at the start of the compression stroke, after the piston has passed BDC.

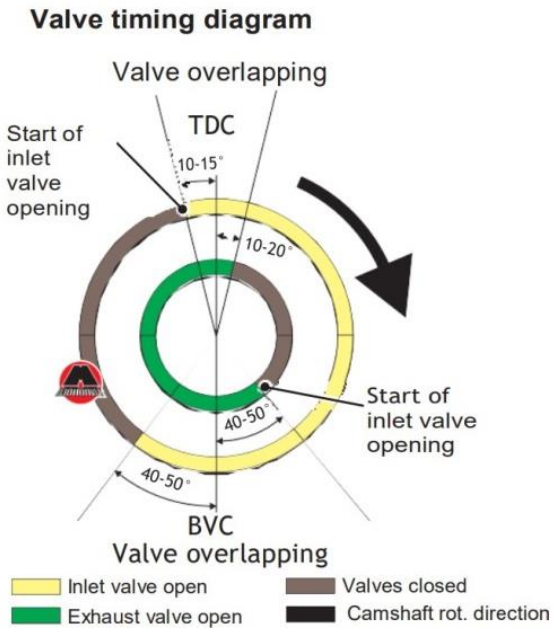

Figure 2.2.21. Valve timing phases

Early opening and late closing of the intake valve ensures better cylinder filling due to the inertial pressure of the fuel mixture in the intake manifold. The exhaust valve opens early at the end of the power stroke, when the piston has not yet reached TDC, allowing exhaust gases to exit the cylinder under their own excess pressure. Closing of the exhaust valve occurs after the piston passes TDC at the beginning of the intake stroke, which ensures better cylinder scavenging, as the exhaust gases continue to leave the cylinder by inertia.

2.2.9.6. Cylinder firing order

The sequence of identical strokes in different cylinders is called the cylinder firing order. The firing order depends on the arrangement of the cylinders, crankshaft journals, and camshaft lobes.

In a four-stroke, four-cylinder inline engine, the strokes alternate every 180° in the order 1—3—4—2 or 1—2—4—3.

2.2.10. Engine Cooling System

2.2.10.1. Purpose of the Cooling System

The combustion of the working mixture in the cylinders is accompanied by heat release. The temperature of gases in the combustion chamber exceeds 2000°C, causing intense heating of engine components and their potential destruction. When the engine overheats, oil breaks down and cokes, accelerating carbon deposit formation, which worsens heat dissipation, disrupts smooth engine operation, and causes knocking. Due to thermal expansion of components, clearances decrease, friction increases, and wear accelerates.

Engine overcooling is also undesirable, as it sharply increases wear of cylinders and piston rings because unburned fuel in liquid form washes oil off the cylinder walls, enters the crankcase, and thins the oil. In diesel engines, this also leads to carbon deposits on pistons, piston rings, and exhaust valves.

Thus, the engine cooling system is designed to cool engine components and maintain an optimal thermal regime, ensuring maximum power, high efficiency, and durability. There are air-cooled and liquid-cooled engines. Liquid cooling is most common in automotive engines. Air cooling is usually applied in low-power engines.

2.2.10.2. Liquid Cooling System

In a liquid cooling system, excess heat is removed from the cylinder walls and combustion chamber by a liquid that fills the cooling jackets of the block and cylinder head.

Circulating through the system, the heated liquid flows into the radiator, where the absorbed heat is transferred to the surrounding air.

Automotive engines have a closed liquid cooling system with forced circulation of the liquid by a water pump.

The construction of such a cooling system is shown in Fig. 2.2.22.

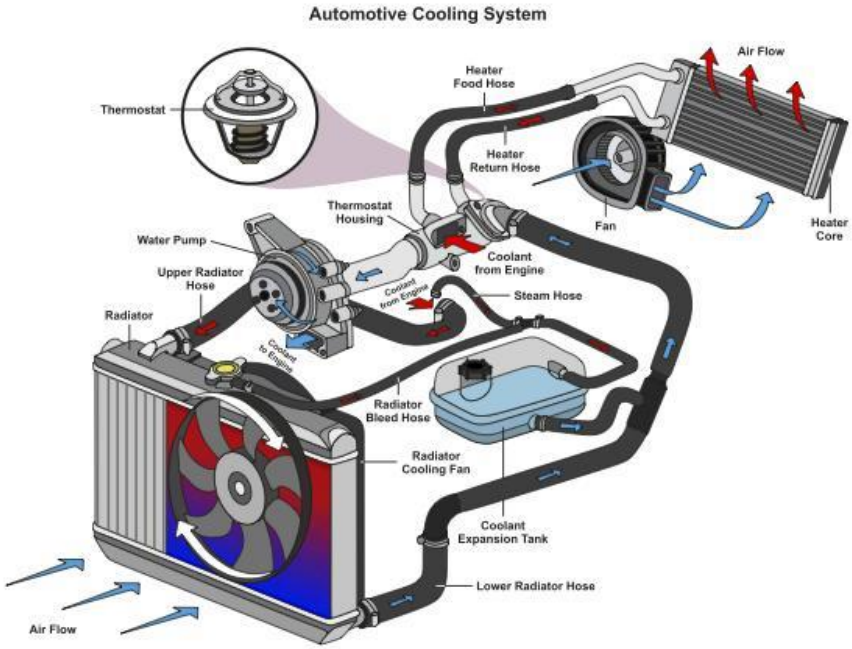

Figure 2.2.22. Cooling System Diagram

Cooled liquid from the radiator flows to the centrifugal pump and then into the water jacket of the engine block, washing the external surfaces of the cylinder liners. Next, the liquid flows to the water jacket of the cylinder head. From the cylinder head, through the thermostat and pipe, the liquid flows back to the radiator.

Under the action of airflow, the liquid in the radiator is cooled. After this, the circulation process repeats.

The thermostat installed in the cooling system allows liquid to pass into the radiator only when it is heated to 80°C or higher. At lower temperatures, the liquid from the cylinder head bypasses the radiator and

flows directly into the water pump. This accelerates engine warm-up. When the liquid reaches the required temperature, the thermostat valve opens, and water flows into the radiator.

The thermostat maintains the specified engine temperature, preventing overcooling and overheating.

Cabin heating is provided by the flow of liquid through the cabin heater radiator from the cylinder head to the water pump. Liquid circulation depends on the position of the valve and is independent of the thermostat position, ensuring cabin heating even when the engine is warming up.

An expansion tank is installed to compensate for changes in the volume and pressure of the coolant.

2.2.10.3. Elements of the Liquid Cooling System

Water Pump

The centrifugal water pump (Fig. 2.2.23) is designed to create circulation of water in the automobile engine cooling system.

The pump flow can reach up to 13 m³/h, and the pressure at the discharge line ranges from 0.05 to 0.2 MPa.

Pumps of this type are simple, reliable, and inexpensive to manufacture.

The pump is usually located at the front of the engine block and is driven by a V-belt from the engine crankshaft or a timing belt from the gas distribution mechanism.

The pulley is mounted on a shaft held in a double-row ball bearing.

The bearing has no inner race; the shaft of the pump acts as the bearing race.

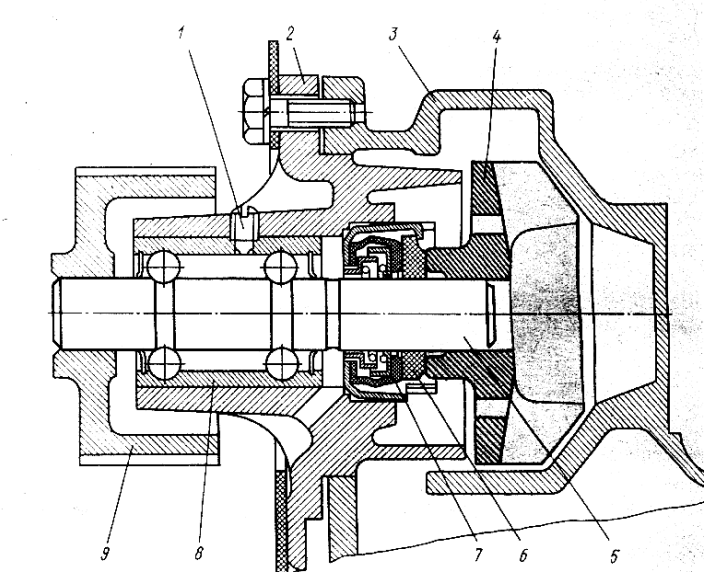

Figure 2.2.23. Cooling System Pump

On the opposite side, an impeller is pressed onto the shaft, which, when rotating, throws the liquid against the walls of the housing, thereby creating liquid pressure. A seal is pressed against the impeller. To prevent liquid from entering the bearing in case the seal is damaged, there is a drain hole in the housing below the bearing.

Thermostat

The thermostat (Fig. 2.2.24) is an automatic valve that helps accelerate engine warm-up and maintains a stable engine temperature.



Figure 2.2.24. Thermostat

Thermostats are made with a solid filler and are produced with different opening temperatures for the main valve, ranging from 80 to 95°C.

At intermediate temperatures, the liquid circulates through both the large and small circuits. This allows gradual mixing of cold liquid with hot liquid, achieving the optimal operating temperature for the engine.

Additional temperature control in the cooling system can be carried out using louvers. Louvers are installed in front of the radiator and are adjusted manually or automatically.

Radiator

The radiator is designed to cool the hot coolant coming from the engine water jacket.



Figure 2.2.25. Radiator

The radiator (Fig. 2.2.25) consists of two tanks, connected by rows of tubes. Transversely or vertically arranged fins, provide rigidity to the radiator and increase the cooling surface area.

Radiator tanks can be made of brass or plastic. Some radiators of closed cooling systems do not have filler necks, and the coolant is filled through the expansion tank.

Cap

In a closed cooling system, the expansion tank cap (Fig. 2.2.26) has a release valve, 4, which opens at a vapor pressure of 0.012 MPa, thereby increasing

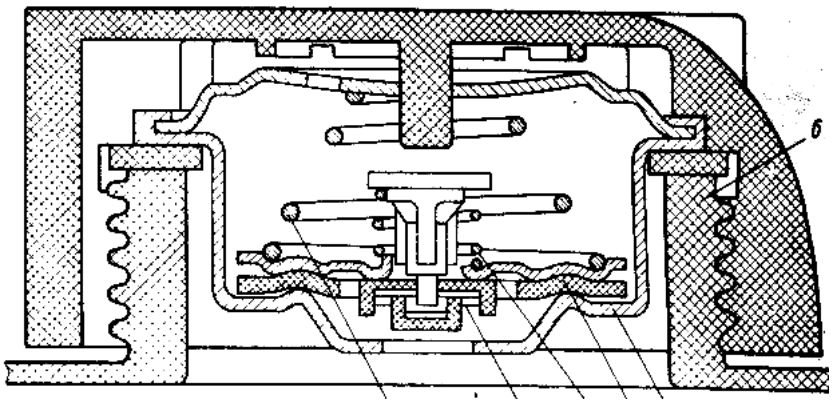

Figure 2.2.26. Expansion tank cap

the boiling point of the coolant to 110 °C. During cooling, the pressure of the coolant in the system decreases, and air is drawn into the system through the inlet valve, 2, preventing the radiator tubes from being crushed by external air. The opening pressure of the inlet valve is 0.3–1.3 kPa.

The use of a closed cooling system allows the vehicle to operate in high-altitude conditions with low air pressure.

Fan

The fan (Fig. 2.2.27) is designed to increase the speed and volume of air passing through the radiator. In electrically driven systems, the fan can be installed either behind or in front of the radiator. To reduce noise, fans may have different numbers and arrangements of blades and attack angles (30–40°) for flat and profiled blades.



Figure 2.2.27. Fan

Coolant

A low-freezing liquid with a freezing temperature of −40 °C must be poured into the cooling system. It is a mixture of ethylene glycol, water, and various additives.

Special additives are added to low-temperature fluids to protect metals from corrosion caused by ethylene glycol. These liquids are toxic and require careful handling. If they enter the human body, they can cause vision loss or even death. The use of water in modern cooling systems is allowed only in special cases and for short periods.

2.2.10.4. Pre-start Heaters

To facilitate starting a car engine at low temperatures, autonomous pre-start heaters are used (Fig. 2.2.28).

They consist of a non-disassemblable boiler, which has a combustion chamber, a flue, and two liquid jackets connected to the cooling system. Fuel is supplied to the combustion chamber by gravity from the fuel tank through a dosing device, and air is supplied by fan. The mixture is ignited by spark plug.

The advantage of liquid heaters is that they warm both the interior of the vehicle and the engine. They are usually installed in the engine compartment and integrated into the car's cooling system. Heating can be started using a modular timer for pre-programming or remotely by phone.

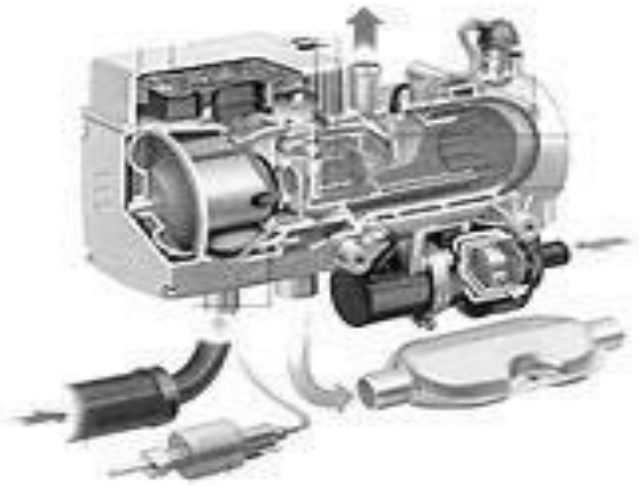

Figure 2.2.28 – Autonomous pre-start heater of a car engine

Hot gases passing through the flue transfer heat to the coolant. Pre-start heaters can operate both autonomously and from a 220 V power supply.

2.2.10.5. Air-Cooling System

In the air-cooling system, excess heat is removed from the external surface of the engine by a directed airflow. The main components of the air-cooling system are an axial fan 1 (Fig. 2.2.29) with a guide apparatus 2, a guide shroud (deflector) 3, reflectors 6 and 7, the fan drive, and the cooling fins of the cylinders 4 and cylinder heads 5.

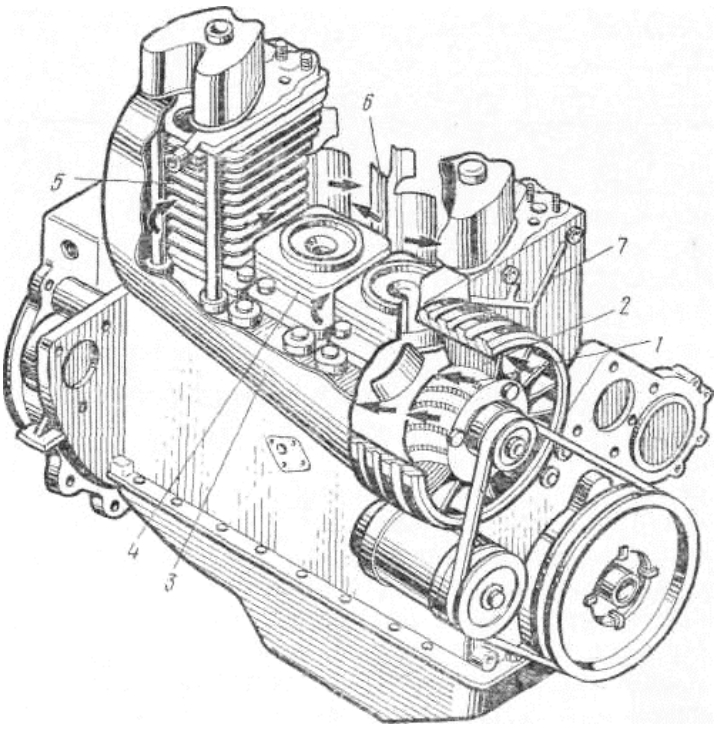

Figure 2.2.29. Air cooling system

During engine operation, air enters the fan through the guide apparatus and is then directed under the shroud. From the shroud, the airflow is directed at high speed to the cylinders and cylinder heads, passing between the fins and cooling the heated components.

Air-cooled engines, compared to liquid-cooled engines, have smaller dimensions and weight per unit of power, are simpler to maintain, and do not have the risk of damage from freezing. However, the temperature regime of most major engine components is more stressed, and the mean effective pressure and specific power are lower. Air-cooled engines are also noisier. Furthermore, air-cooled engines cannot provide heat for the passenger compartment in cold weather.

Additional regulation of the cooling system temperature can be carried out using shutters. The shutters can be adjusted manually or automatically.

2.2.11. Engine lubrication system

2.2.11.1. Purpose of the lubrication system

The lubrication system is designed to supply oil to the friction surfaces of engine parts in order to reduce friction and wear, cool components, clean them from deposits and wear products, and protect against corrosion. Lubrication also helps improve the sealing of the cylinder with the piston.

The least friction and wear occur under hydrodynamic (liquid) lubrication. Therefore, the design of engine parts and their lubrication systems should ensure maximum hydrodynamic lubrication.

The lubrication conditions of individual engine parts vary.

Some parts (crankshaft main and connecting rod bearings) are subjected to high loads but operate at relatively low temperatures (100–150°C), allowing hydrodynamic lubrication. Other parts (pistons, cylinder liners, exhaust valves) are exposed to not only high loads but also high temperatures (up to 1000°C), which prevents hydrodynamic lubrication due to the risk of deposit formation. These parts therefore operate under mixed or even boundary lubrication conditions.

Depending on the method of oil delivery to friction points, there are the following types of lubrication systems:

- Splash lubrication;
- Pressure lubrication;
- Combined.

Splash lubrication is the simplest, but its intensity decreases with a lower oil level in the sump and reduced crankshaft speed.

Pressure lubrication systems provide continuous oil supply to the friction surfaces using a pump. With this type of lubrication, the required amount of oil is delivered to the friction surfaces, ensuring intensive circulation.

The disadvantage of pressure lubrication is its significant design complexity.

2.2.11.2. Combined lubrication system

The combined lubrication system is the most common in modern engines. In it, the most heavily loaded surfaces (main and connecting rod bearings, camshaft bearings, etc.) are lubricated under pressure, while less loaded surfaces are.

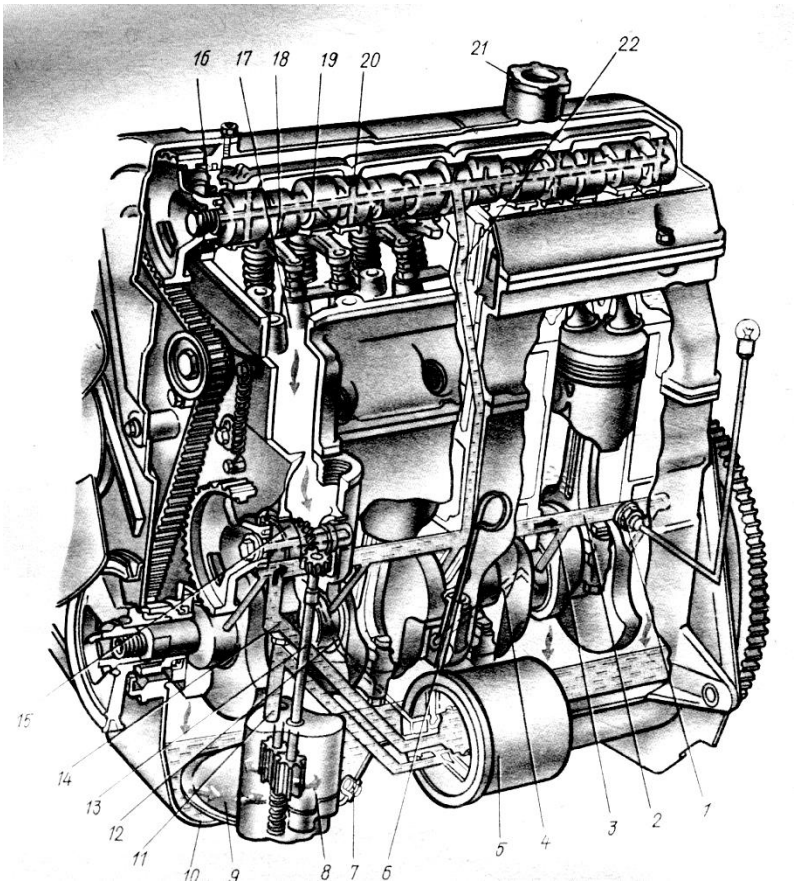

Figure 2.2.30. Lubrication system diagram

Combined lubrication systems are divided into:

- With a wet sump (oil inside the sump)
- With a dry sump (oil in special tanks).

In the combined lubrication system (Fig. 2.2.30), oil passes through the oil intake 9, through the oil pump 8 and filter 5, and enters the main oil gallery 2 under pressure.

From there, it flows through the channels 3 in the engine block to the main bearings, and then through the channels 4 in the crankshaft to the connecting rod bearings.

Through channels, oil reaches the camshaft and then its cams and bearings, gears, timing mechanism drives, and hydraulic lifters.

To the remaining parts — cylinder walls and pistons, piston pins, sprockets and chain tensioning devices, valve stems and guide bushings — oil is supplied by splashing or gravity flow.

In some cars, an oil radiator (BMW) or heat exchanger (Opel, Audi) may be installed to reduce oil temperature.

2.2.11.3. Main elements of the lubrication system

The oil pump is designed to supply oil under pressure to the friction surfaces and for oil cleaning and cooling devices.

In car engines, gear pumps with external and internal gearing are used.

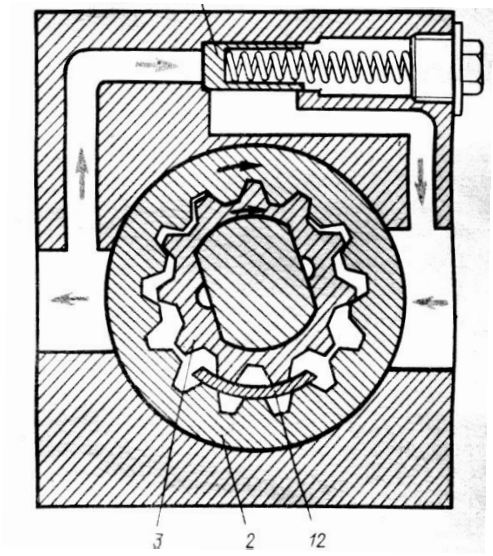

Figure 2.2.31. Operation diagram of an internal-gear oil pump

They have a simple design (Fig. 2.2.31), small dimensions, are reliable in operation, and provide a uniform oil supply.

In engines, the internal-gear oil pump is located at the front end of the crankshaft. The driving gear 3 (with external teeth) and the driven gear 2 (with internal teeth) draw in oil and, with the cavities of the teeth, deliver it to the pump's pressure chamber.

The suction chamber is separated from the pressure chamber by a crescent-shaped protrusion 1.

When the pressure exceeds 0.45–0.5 MPa, the relief valve 4 opens, and part of the oil flows back into the pump's suction chamber.

In different engine models, the pump is driven either directly by the crankshaft or via a chain drive.

Oil filters

Oil filters clean the oil from foreign particles and sediments.

Filters are divided into groups:

- coarse filters;
- full-flow filters.

A mesh filter is installed in the oil intake.

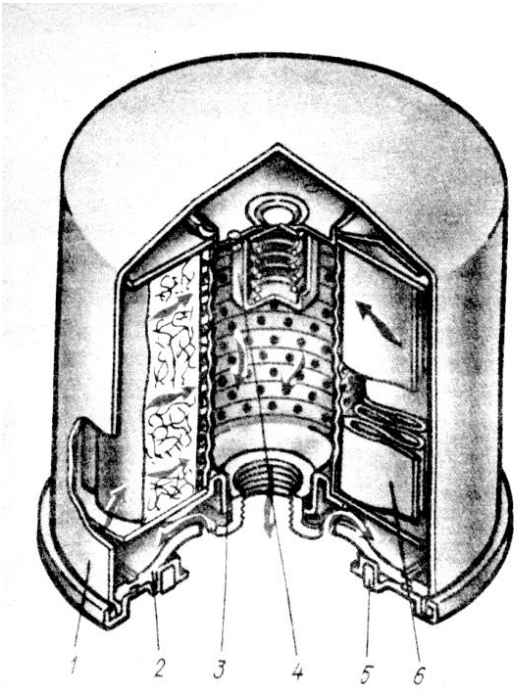

Figure 2.2.32. Oil filter

Fine oil filters clean the oil from the smallest impurities (up to 0.01 mm) and resins.

Automobiles also use full-flow oil filters with cardboard or paper filtering elements (Fig. 2.2.32). The oil filter consists of a housing 1, in which the filtering element 6, a bypass valve 4, and a check valve 3 are installed. The check valve is made of oil-resistant rubber, which freely allows oil into the filter but prevents it from flowing out of the housing into the oil pan when the engine is not running. This device is necessary to maintain a constant reserve of oil in the filter housing and channels, ensuring oil supply to friction surfaces immediately after engine start.

When the filtering element becomes clogged, the bypass valve allows unfiltered oil to reach the lubrication surfaces outside the filter.

The oil intake is designed to draw oil from the engine sump. There are floating and fixed oil intakes.

The oil intake also acts as a primary filter because oil passes from the sump through a mesh screen.

Oil radiator

The oil radiator is intended to cool the oil at high air temperatures or during engine overload.

Oil radiators can be water–oil or air–oil types. The latter are more reliable in operation.

Control instruments

These include a pressure gauge or pressure drop sensors, and a thermometer. The oil level is measured using a special dipstick (Fig. 2.2.31, 6) or an oil level sensor.

2.2.11.4. Engine crankcase ventilation

Modern engines use forced crankcase ventilation, designed to prevent the release of crankcase gases into the atmosphere and to protect the environment.

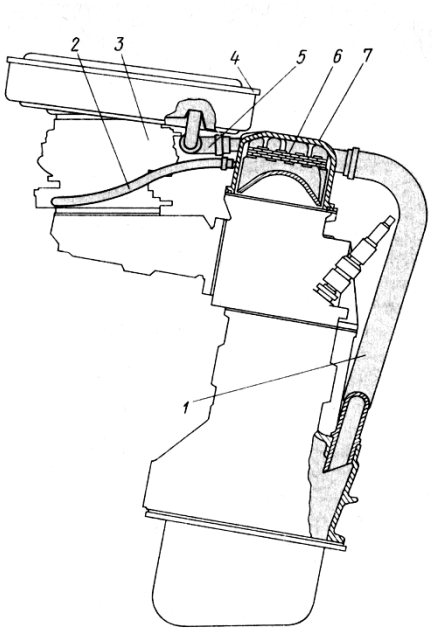

Figure 2.2.33. Engine crankcase ventilation system

To prevent the possibility of oil leakage through seals and gaskets, the pressure of the crankcase gases must be lower than atmospheric.

In the engine, crankcase gases from the sump pass through the exhaust hose (Fig. 2.2.33, 1) into the oil separator housing 7, where they are separated from the oil. The mesh 6 of the oil separator functions as a flame arrester.

2.2.12. Fuel Systems

2.2.12.1. Fuel supply system of gasoline engines

The fuel supply system of a vehicle is designed for storing, delivering, and filtering fuel, cleaning air, preparing a combustible mixture of the required composition for different engine operating modes, and removing combustion products.

2.2.12.2. Composition of the combustible mixture at different engine operating modes.

Gasoline is used as fuel for carburetor vehicle engines.

Its main properties are:

- Evaporation (boiling temperature): the better the evaporation, the easier the cold start;
- Calorific value: 44 MJ/kg;
- Anti-detonation resistance.

Detonation is an explosive combustion of fuel accompanied by a rapid short-term increase in pressure, engine overheating, power reduction, black exhaust smoke, and a metallic knocking sound. This accelerates the wear of crankshaft mechanism parts and burns valves.

Causes of detonation:

- Unsuitable fuel;
- Too early ignition;
- Engine overheating.

The iso-octane content in fuel characterizes the octane rating.

AI – 92 (Octane 92)

To increase the octane number, anti-knock agents (manganese compounds) are added to gasoline.

Gasoline vapors mixed in a certain ratio with air form a combustible mixture, which is supplied to the engine cylinders.

For complete combustion of 1 kg of gasoline, 14.7 kg of air is required. A mixture with a ratio of 1:14.7 is considered normal. The ratio of the actual amount of air to the theoretically required amount is called the air excess coefficient λ.

Fuel mixtures are classified as:

- Rich: 1:12 or less ($\lambda < 0.8$);
- Slightly rich: 1:12–15 ($0.8 < \lambda < 1.0$);
- Lean: 1:15–17 ($1.0 < \lambda < 1.15$);
- Very lean: 1:17 or more ($1.15 < \lambda$).

The engine develops maximum power at $\lambda = 0.9$. Economical operation occurs at $\lambda = 1.15$. At idle, $\lambda = 0.7–0.8$. At medium loads, $\lambda = 1.05–1.2$.

2.2.12.3. Structure of gasoline injection system

The use of a fuel supply system with distributed injection allows increasing vehicle efficiency and significantly reducing the content of toxic components in exhaust gases (EG). The core of the distributed fuel injection system (Fig. 2.2.34) is the electronic control unit (ECU) 5. The ECU continuously processes information received during operation from sensors according to a set control algorithm and issues control signals (commands) to the engine actuators to maintain optimal vehicle operating parameters (fuel consumption, EG toxicity) depending on operating conditions.

The ECU receives and processes the following information:

- Throttle position, 11 (load);
- Engine air flow, 12;
- Engine temperature, 15;
- Crankshaft position and rotation speed, 17;
- Oxygen content in exhaust gases, 14;
- Presence of detonation, 21;
- Vehicle speed, 22;
- Voltage in the vehicle's electrical system;
- Activation of additional consumers;
- Engine start.

Based on the received information, the ECU issues commands to the following systems:

- Fuel supply;
- Ignition;
- Idle speed control;
- Emission reduction;
- Engine temperature regulation;
- Activation of additional consumers;
- Diagnostics.

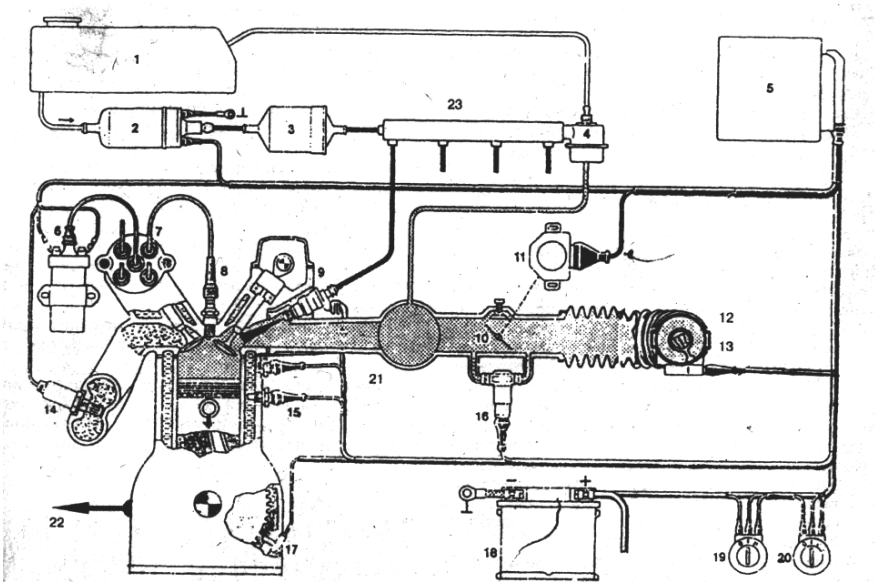

Figure 2.2.34. Diagram of the fuel system with distributed fuel injection:
1 — fuel tank; 2 — electric fuel pump; 3 — fuel filter; 4 — fuel pressure regulator; 5 — ECU; 6 — ignition coil; 7 — ignition distributor; 8 — spark plug; 9 — injector; 10 — throttle valve; 11 — throttle position sensor; 12 — air flow meter; 13 — air temperature sensor; 14 — λ-sensor (exhaust oxygen sensor);

15 — coolant temperature sensor; 16 — auxiliary air supply valve; 17 — crankshaft position and speed sensor; 18 — battery; 19 — ignition switch; 20 — air conditioner switch; 21 — knock sensor; 22 — vehicle speed sensor; 23 — fuel distributor (rail).

By the commands of the ECU output stages, voltage is supplied to the actuators. The ECU contains a calibration memory device, which allows the same ECU model to be used on different car models. The calibration device stores information about the specific vehicle, its weight, engine, transmission, final drive, and some other parameters.

When a malfunction occurs, the "CHECK ENGINE" warning lamp lights up.

2.2.12.4. Sensors

The air flow meter is installed between the air filter and the throttle body. The meter contains three sensitive elements in the form of wires. One element measures the incoming air temperature, while the other two measure the air mass flow. The air flow meter outputs information as a voltage proportional to the flow: the higher the air flow, the higher the output voltage. Based on this and other information, the ECU generates the injector pulse duration and injection timing.

The throttle position sensor is a Hall effect sensor mounted on the throttle body and linked to the throttle shaft. The sensor signal about the throttle position is sent to the ECU. Monitoring the sensor output voltage, the ECU adjusts fuel delivery depending on the throttle opening angle.

The coolant temperature sensor is a thermistor (resistor whose resistance varies with temperature). The ECU supplies 5 V to the sensor and measures the voltage drop across it. The voltage is high when the engine is cold and low when it is warmed up.

The crankshaft position sensor is of the inductive type and is designed to detect TDC of the 1st and 4th cylinders and determine the instantaneous angular position of the crankshaft. The trigger disc has 58 teeth with a 6° pitch and one reference synchronization section (two teeth removed).

The sensor generates voltage pulses (Fig. 2.2.35) when the teeth of the trigger disc pass through its magnetic field. The installation gap between the sensor core and the teeth should be within 1 ± 0.5 mm.

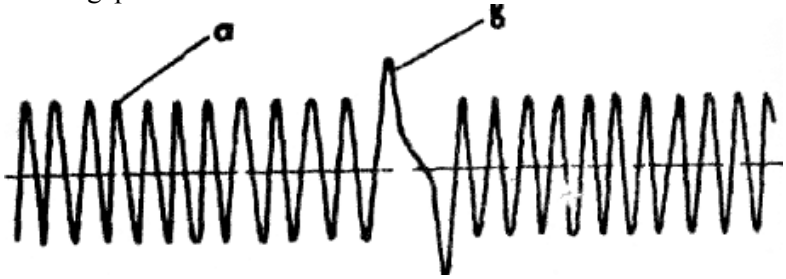

Figure 2.2.35. Oscillogram of the crankshaft position sensor voltage pulses

The ECU determines the timing of fuel injector opening and spark delivery to the spark plugs based on signals from the crankshaft position sensor.

The knock sensor, of the piezoelectric type, is installed on the upper part of the engine block housing and converts vibrations of the housing caused by detonation knocks into electrical signals of a specific frequency spectrum. The ECU adjusts the ignition timing according to the sensor signal to eliminate detonation in the engine combustion chamber.

The vehicle speed sensor is installed on the transmission on the speedometer drive. Its operation is based on the Hall effect. The sensor outputs voltage pulses to the ECU at a frequency proportional to the vehicle speed.

The oxygen concentration sensor in the exhaust gases (λ-sensor) is installed on the exhaust pipe before the catalytic converter. It monitors the residual oxygen content in the exhaust gas flow. The sensor's sensitive element is based on zirconium oxide and has an operating temperature of approximately 370 °C. To accelerate reaching the operating temperature, the sensor includes a built-in heating element.

Depending on the oxygen concentration in the exhaust gases, the sensor generates an output voltage signal from 0.1 V (lean mixture) to 0.9 V (rich mixture). By monitoring the voltage from the λ-sensor, the ECU adjusts the air–fuel mixture by sending a pulse of a specific duration to the fuel injectors.

The air conditioner signal sensor informs the ECU about the activation of the air conditioner, allowing the ECU to adjust the idle speed to compensate for the additional engine load from the air conditioner compressor.

2.2.12.5. Environmental protection systems
Exhaust gas toxicity

The composition of the air–fuel mixture strongly affects the formation of toxic combustion products. During engine operation, the following toxic substances are produced: carbon monoxide (CO), hydrocarbons (unburned fuel, HC), and nitrogen oxides (NOx).

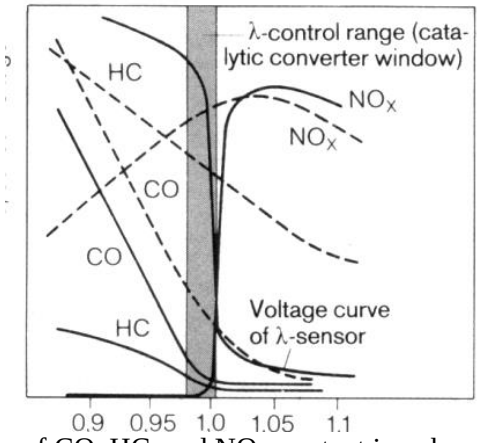

Figure 2.2.36. Dependence of CO, HC, and NOx content in exhaust gases on the fuel mixture composition (– – – without catalytic converter; ——— with catalytic converter)

When the engine operates on a lean mixture, CO is absent, and the HC content is minimal (Fig. 2.2.36). As the mixture becomes richer, the content of CO and HC increases. With a significantly lean mixture, due to poor combustion, the HC content in the exhaust gases also rises.

The content of nitrogen oxides NOx in the presence of excess oxygen increases with the maximum cycle temperature. The maximum cycle temperature is reached at $\lambda = 0.85–0.95$, but due to the lack of free oxygen, the NOx amount is small. The maximum amount of NOx forms at $\lambda = 1.05$, when free oxygen appears and the cycle temperature is almost at its maximum.

Catalytic converter

A three-way catalytic converter, installed in the exhaust system immediately after the exhaust manifold before the muffler, converts toxic components of exhaust gases into non-toxic compounds. The converter housing contains a ceramic element (core) with microchannels coated with catalysts: two oxidizing and one reducing. Oxidizing catalysts (platinum and palladium) convert HC into water vapor and CO into harmless carbon dioxide (CO2). The reducing catalyst (rhodium) accelerates the chemical reduction of nitrogen oxides NOx into harmless nitrogen (N2).

Crankcase ventilation system

At idle speed, with minimal crankshaft rotation and the throttle closed, crankcase gases flow through tube 29 (Fig. 2.2.37) into the throttle inlet 28 and then through the idle channel bypassing the throttle into the air receiver 11. At normal engine operation, when the throttle is open, crankcase gases are drawn into the air receiver via tube 30.

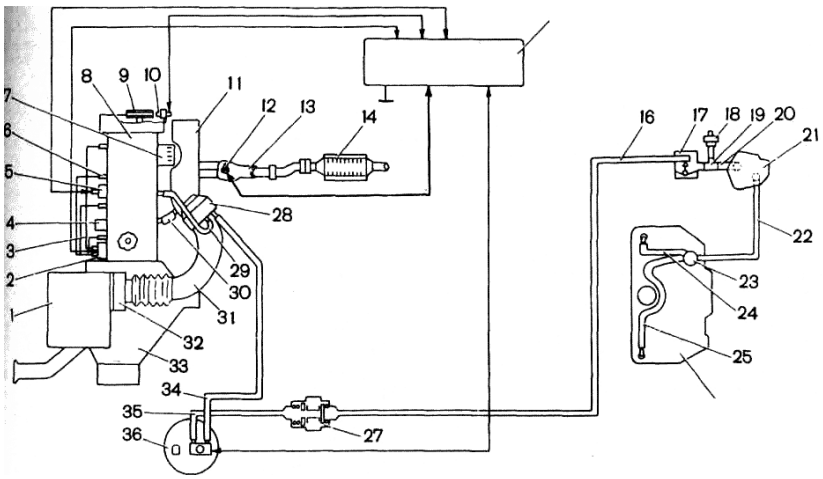

Figure 2.2.37 Ignition and environmental protection system

Exhaust gas neutralization system

This system includes (Fig. 2.2.37) a three-way catalytic converter 14 and an oxygen concentration sensor 12 (λ-sensor). The catalytic converter 14 has a honeycomb block coated with a catalytic mixture of platinum, palladium, and rhodium. Exhaust gases containing the most toxic components—carbon monoxide (CO), hydrocarbons (HC), and nitrogen oxides (NOx)—contact the catalyst, and a significant portion of the toxic components is converted into water (H2O), carbon dioxide (CO2), and nitrogen (N2).

The oxygen sensor 12 has electric heating to reach operating temperature faster. The ECU uses the oxygen content information to maintain the optimal λ value by adjusting the pulse width sent to the fuel injectors.

This system functions correctly only when using unleaded gasoline. Leaded gasoline quickly disables the system because lead clogs the micro-pores of the catalyst block and covers the sensor contact surface, causing incorrect oxygen readings. Consequently, the ECU increases the injector pulse width, potentially damaging the converter. The converter may also fail due to ignition misfires, as unburned mixture enters the converter, sharply raising its temperature and causing cracks in the honeycomb block.

Fuel vapor recovery system

When the engine is off, gasoline vapors (Fig. 2.2.37) from the fuel tank 26 pass through tubes 25 and 24 into the separator 21, where they partially condense and return to the fuel tank.

After engine start, the ECU activates the adsorber purge solenoid for a set time, drawing external air through the adsorbent, which then enters the throttle inlet 28. As fuel is consumed, a vacuum forms in the fuel tank 26, drawing external air through the adsorber 36 into the two-way valve 27, opening the check valve. Air then flows through tube 16, the gravity valve 17, tube 20, separator 21, tube 22, T-joint 23, and tubes 24 and 25 back into the fuel tank 26. The gravity valve 17 prevents fuel spillage during vehicle rollover, while the relief valve 18 releases excess pressure to the atmosphere in case of tank deformation.

2.2.12.6. Diesel fuel systems
General characteristics

The diesel fuel system consists of a fuel supply system and an air supply system. Diesel fuel and air enter the combustion chambers separately, forming a combustible mixture there. Therefore, diesel engines are called engines with internal mixture formation. A feature of diesels is that they operate on lean mixtures at all loads. At maximum power, λ = 1.3–1.7, and as load decreases, the mixture becomes even leaner, reaching 6–8 at idle. This explains why diesel engines are on average 30% more fuel-efficient than gasoline engines

Diesel engines regulate power by controlling the quantity of injected fuel.

Types of fuel systems

Diesel vehicles may use the following types of fuel equipment:
- split type – high-pressure pump and injectors are separate;
- unit type – pump and injector combined in one assembly (unit injector);
- accumulator type (with common rail).

2.2.12.6.1. Diesel fuel system diagram

The split-type fuel supply system (Fig. 2.2.38) of a diesel vehicle includes high- and low-pressure lines. The low-pressure line contains fuel tank 1 with drain valve, fuel filter 7, and lift pump 3.

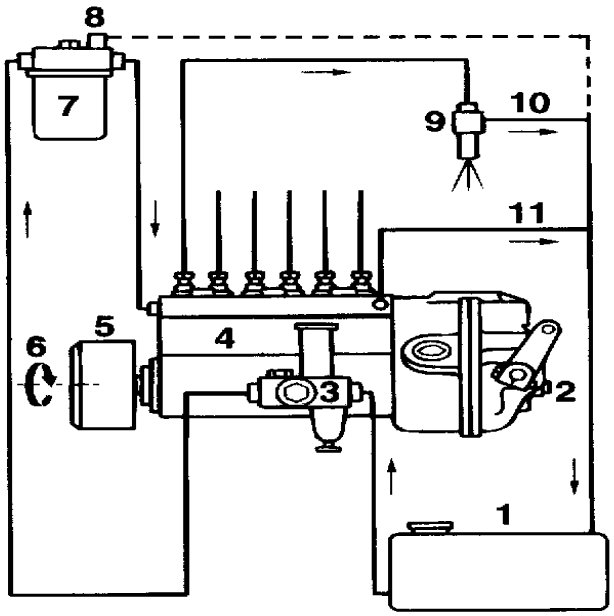

Figure 2.2.38. Diesel fuel system diagram

The high-pressure line includes the high-pressure fuel pump (HPFP) 4, high-pressure fuel lines, and injectors 9. The low-pressure line also includes the fuel drain line 10.

2.2.12.6.2. High-pressure fuel pump

The high-pressure fuel pump (HPFP) meters fuel according to the engine operating mode, delivers it to the injectors, and ensures, together with other system elements, the injection process. The HPFP is installed where it is convenient to establish a kinematic connection of its shaft with the engine crankshaft.

The HPFP is classified by the number of cylinders served by one section:
- multi-section (Fig. 2.2.39) – one section supplies fuel to only one cylinder; the number of sections equals the number of cylinders;
- distributor pumps – one section supplies fuel to several cylinders.

By the method of fuel metering:
- cut-off metering without changing the plunger stroke, where the delivery varies by the plunger pair itself;
- throttle metering at the intake, when delivery is adjusted by a throttling device.

By section arrangement, pumps are classified as inline or V-type. Each pump section ensures the operation of one engine cylinder. In the lower part of the housing 25, a camshaft 1 is mounted on two radial ball bearings 4, sealed with oil seals.

At one end of the pump drive shaft, a gear 26 is mounted, while the other end is connected to a centrifugal fuel injection advance coupling. The camshaft of the pump makes one rotation for every two rotations of the crankshaft, supplying fuel to all cylinders.

The camshaft has ground cams 3 for each pump section and an eccentric 18 (Fig. 2.2.39) to drive the low-pressure fuel pump, which is mounted on the HPFP housing.

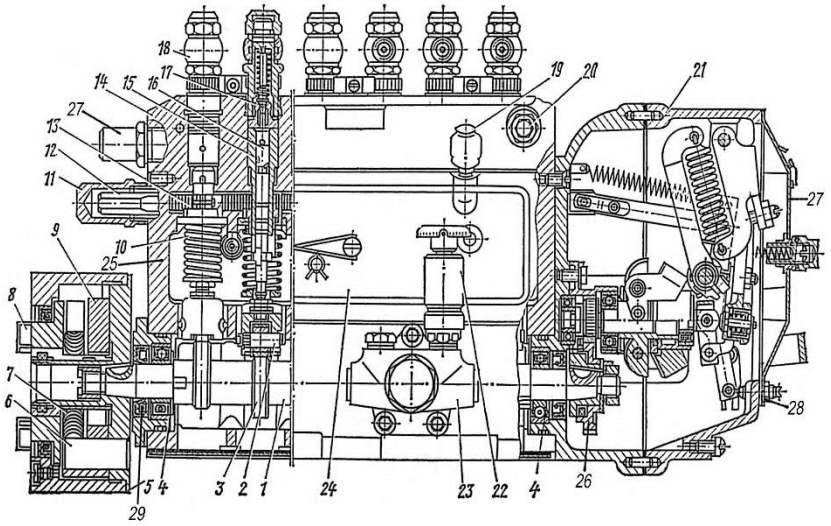

Figure 2.2.39. Multi-section high-pressure fuel pump

2.2.12.6.3.Fuel cleaning

A coarse fuel filter housing contains a filter element consisting of a mesh frame wound with cotton cord. Correct installation of the filter element is ensured by a retaining ring. The drain cock is used for sediment removal.

The fine fuel filter element 3 (Fig. 2.2.40) is housed in a steel casing 4 and has rubber sealing gaskets at the ends. The element consists of a steel frame with small holes, wound with a cotton tape and then covered with a thick layer of mineral wool.

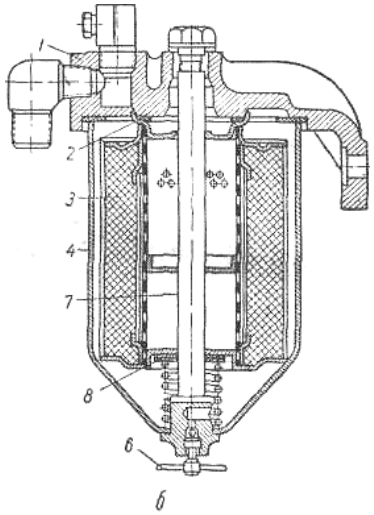

Figure 2.2.40. Fine fuel filter:
1 — cover; 2 and 8 — gaskets; 3 — filter element; 4 — filter housing; 6 — drain cock; 7 — rod.

The fine fuel filter has a bypass valve installed in the cover 1. The valve allows fuel to flow back to the tank in case the filter element becomes clogged. The plugs at the top of the filter cover are removed when filling the fuel system and releasing air.

2.2.12.6.4 Fuel lift pump

The fuel lift pump is used to supply fuel to the high-pressure pump and to the unit injectors.

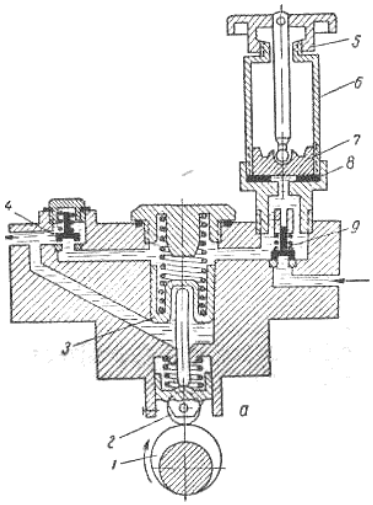

Figure 2.22.41. Fuel feed pump

The fuel feed pump is most often installed on the high-pressure fuel pump (HPFP) and is driven by the camshaft of the HPFP. The fine fuel filter is located at the top of the engine to remove air.

The piston-type fuel feed pump (Fig. 2.2.41) is mounted to the body of the high-pressure fuel pump. During operation, the pump piston 3 moves upward under the action of the roller plunger 2 from the cam 1 of the HPFP camshaft, and downward under the action of the spring. When the piston moves downward, a vacuum is created above it, and fuel flows through the inlet valve 9 into the chamber above the piston. At this moment, the discharge valve 4 is closed. During the piston's upward movement, fuel is displaced from this chamber and passes through the fine filter to the high-pressure pump. At low fuel consumption, there is excessive pressure in the chamber under the piston, so the piston does not reach the lowest position; as a result, the piston stroke and fuel supply automatically decrease.

The manual pump is used to fill the fuel system when the engine is not running and to remove air from it.

2.2.13. Gas-fueled vehicle feed systems

The use of gas as engine fuel, the production of gas feed systems, and their installation on passenger and cargo vehicles have significantly developed in recent years. In addition to mechanical systems with vacuum control, which are widely used in Ukraine and worldwide, new modern systems have been developed and successfully used. They are adapted for engines equipped with an electronic control system and a three-way exhaust gas (EG) catalyst and have better environmental characteristics.

2.2.13.1. Types of gaseous fuel

Natural gas, mainly consisting of methane and stored in cylinders under a pressure of about 20 MPa, as well as liquefied petroleum gases (propane–butane mixtures), which turn into liquid at a pressure of 1.6 MPa, can be used as gas fuel.

In most cases, when converting a gasoline engine to gas, a gas modification of the standard gasoline engine is created. At the same time, the engine can run both on gasoline and gas. On gasoline, the engine develops full power, while on gas, the power decreases by 7–11% when using propane–butane mixtures and by 16–20% on methane. However, the high detonation resistance of gas, with an octane number above 100, is not fully utilized because the engine compression ratio is chosen according to the significantly lower octane number of gasoline. High detonation resistance of gas can be used in a gas engine converted from a diesel engine. In this case, the engine compression ratio is reduced to 12–13, spark plugs replace the injectors, and a distributor replaces the high-pressure fuel pump. A gas mixer is installed on the intake pipe, along with all the necessary gas equipment. Experimental tests of such an engine conducted at LNTU showed that its maximum torque and power practically remained the same as in the diesel engine, emissions of major harmful substances decreased, and soot emissions were completely absent.

2.2.13.2. Gas-cylinder systems

The operating cycle of a gas engine is the same as that of a gasoline engine, but the feed systems of these engines differ significantly. The most common are compressed gas feed systems (Fig. 2.2.42).

Gas cylinders, combined into two groups, are placed under the cargo platform and filled with gas through valve 6. From the cylinders, gas passes through flow valves into the two-stage gas reducer 13.

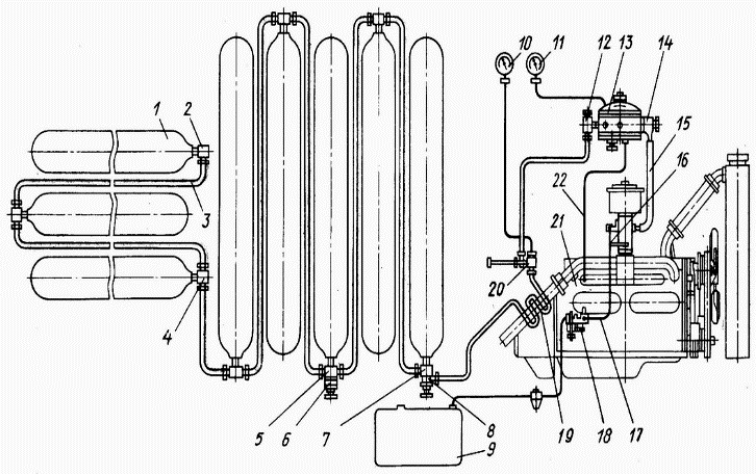

Figure 2.2.42. Compressed gas-cylinder system:
1 – cylinder; 2 – cylinder elbow; 3 – high-pressure gas pipe; 4 – cylinder tee; 5 – crosspiece of the filling valve; 6 – filling valve; 7 – valve elbow; 8 – flow valve; 9 – fuel tank; 10 and 11 – high- and low-pressure gauges, respectively; 12 – gas filter; 13 – two-stage gas reducer; 14 – dosing–economizer device of the gas reducer; 15 – low-pressure gas pipe; 16 – carburetor–mixer; 17 – fuel pipe; 18 – fuel pump; 19 – compressed gas heater; 20 – main valve; 21 – engine; 22 – tube

The two-stage gas reducer 13, which has two stages, reduces the gas pressure almost to atmospheric. The gas then enters the carburetor–mixer 16, and at idle, through hose 22, directly into the throttle bypass.

2.2.13.3. Gas reducers

Gas reducers are the most complex components of gas equipment. They are divided into two types: high-pressure and low-pressure reducers. High-pressure reducers are used only in compressed gas systems. In them, high pressure is reduced to a level suitable for feeding the inlet of the low-pressure reducer.

Low-pressure gas reducers are automatic two-stage diaphragm–lever type pressure regulators. They perform the following functions:

- reduce the gas pressure at the reducer outlet to a certain excess value (20–100 kPa) necessary to facilitate engine start and ensure stable operation in transitional modes;
- provide the required gas flow depending on the engine operating mode;
- shut off gas supply when the engine stops.

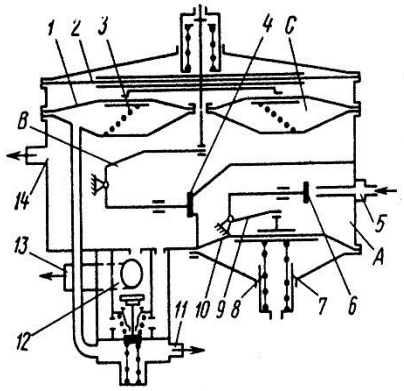

Figure 2.2.43. Diagram of a two-stage low-pressure gas reducer

The reducer operates as follows. When the engine is off and the gas line is closed, the pressure in chamber A of the first stage is equal to atmospheric (Fig. 2.2.43), and valve 6 under the action of spring 8 is in the open position. When the gas line is opened and gas enters chamber A, the gas pressure acts on diaphragm 10, which, overcoming the force of spring 8, deflects downward and, upon reaching the set pressure, closes valve 6 through lever 9.

A feature of the second stage design is the presence of a relief device. The spring 3 of this device, when the engine is off, creates additional force on diaphragm 2, which through the lever system closes valve 4. When the engine starts, a vacuum is created in the intake manifold, which is transmitted to chamber C of the relief device through fitting 11. Diaphragm 1 of the device deflects and compresses spring 3, relieving diaphragm 2 of the second stage. Valve 4 then opens, and the gas initially fills chamber B of the second stage, and then, through fitting 14 of the idle system and the dosing–economizer device 12, enters the engine. As the throttle valves open and the vacuum in the mixer diffusers increases, the gas supply to the engine cylinders rises.

2.2.13.4. Components of the gas-cylinder system

The gas pipelines from the cylinders to the high-pressure reducer are steel tubes with an outer diameter of 10 mm and a wall thickness of 2 mm.

The valves installed in the gas-cylinder system have different purposes: one is a filling valve, and the rest are several consumption valves. The design of the valves is basically the same; they differ only in the thread on the side fitting.

The gas heater is used for preheating gas that has a high moisture and carbon dioxide content. The heat source can be exhaust gases or coolant.

Gas mixers are used to prepare the combustible mixture and regulate its supply to the cylinders. Structurally, gas mixers can be made separately or combined with a carburetor (carburetor–mixer) when it is necessary to provide engine operation on two types of fuel: gas or gasoline without modifying the engine.

2.2.13.5. Gas-cylinder system for operation on liquefied gas

The fuel system for engines running on liquefied gas differs in cylinder equipment and the absence of a gas heater, which is replaced by a vaporizer (Fig. 2.2.44). Gas from cylinder 5 passes through consumption valve 19, main valve 6, and pipeline 17 into the vaporizer 16, which is heated by coolant. Then, through filter 11, the gas enters the reducer 12, where its pressure is reduced almost to atmospheric.

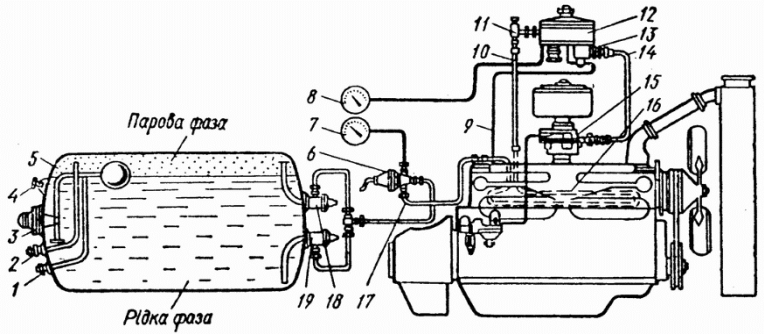

Figure 2.2.44. Diagram of the gas-cylinder system for liquefied gas

From the reducer, the gas enters the mixer 15. Valve 4 is used for filling the cylinder.

2.2.14. Engine start system

Engine start system is designed for engine starting. The starter is engaged remotely via an electromagnetic mechanism. The schematic diagram of the starter is shown in Fig. 2.2.45.

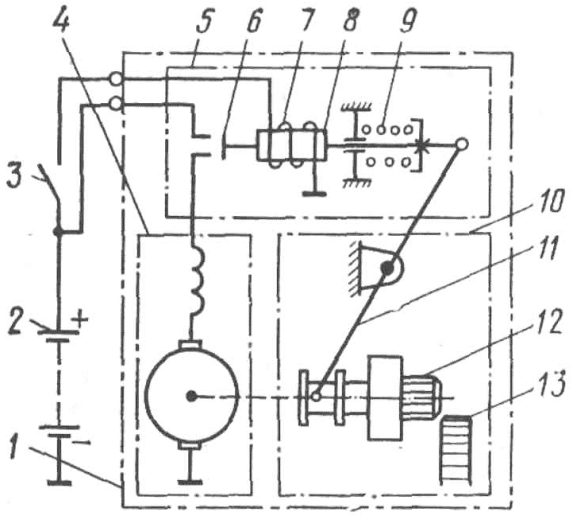

Figure 2.2.45. Starter circuit and its connection
1 – starter; 2 – battery (AKB); 3 – ignition switch; 4 – electric motor; 5 – solenoid relay; 6 – contact disc; 7 – pull-in winding; 8 – yoke; 9 – spring; 10 – starter drive; 11 – fork; 12 – freewheel clutch; 13 – flywheel ring gear

More details of the starter are shown in Fig. 2.2.46. The starter housing 1 houses the solenoid relay. Steel poles with excitation windings are fixed in the starter housing. They are connected in series with the armature winding. Copper-graphite brushes are mounted in brush holders attached to the cover. The brushes are pressed against the commutator by springs.

The armature consists of a shaft and laminated cores pressed onto it with winding and commutator. The winding is placed in the slots of the core, which is made of thin electrical steel sheets. The ends of the winding are connected to insulated commutator segments. The armature shaft rotates in metal-ceramic bushings pressed into the starter covers. The front cover has a flange by which the starter is mounted to the clutch housing or gearbox.

The freewheel clutch transmits torque from the starter to the flywheel ring gear during engine start and disengages the starter gear from the flywheel after starting.

The starter is activated by turning the key. At this moment, current from the battery first flows to the pull-in 9 and hold 10 windings.

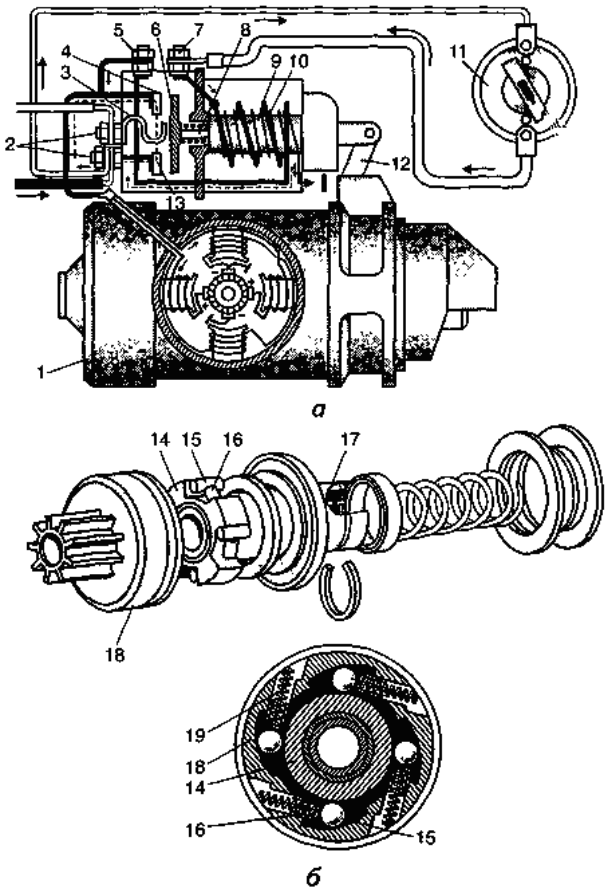

Figure 2.2.46. Starter

a – diagram, b – freewheel clutch; 1 – housing; 2, 5, 7 – terminals; 3 – additional contact; 4, 13 – main contacts; 6 – contact disc; 8 – rod; 9 – pull-in winding; 10 – hold winding; 11 – ignition switch; 12 – fork; 14 – driving sleeve; 15 – roller; 17 – splined bushing; 18 – driven sleeve; 19 – spring

The activation relay operates as follows. Under the influence of the magnetic field created by the windings, the core of the pull-in relay moves inward through the windings and moves the fork 12, whose lower end pushes the freewheel clutch along the helical splines and engages its gear with the flywheel ring gear. At the same time, the core of the pull-in relay, via rod 8, moves the contact disc 6, closing contacts 4 and 13 of the starter motor circuit. The starter then begins to rotate the engine crankshaft.

After starting the engine, the starter is switched off by turning the key. The drive components return to their initial positions under the action of the spring.

If the starter is not turned off after engine start, the freewheel clutch engages. This prevents torque from being transmitted to the armature shaft, avoiding damage from centrifugal forces on the starter armature.

If, during starter engagement, the starter gear tooth coincides with a flywheel tooth, the drive spring compresses, allowing the engagement fork to move further and close the starter electric circuit. When the armature rotates a few degrees, the gear immediately engages with the flywheel under the action of the buffer spring.

2.2.15. Ignition System

The ignition system is designed to ensure reliable ignition of the fuel-air mixture in the engine cylinders at the correct moment, taking into account engine speed and load.

In addition to power sources, the ignition system includes the ignition coil, breaker-distributor, capacitor, spark plugs, and ignition switch. Fig. 2.2.47 shows the engine ignition circuit.

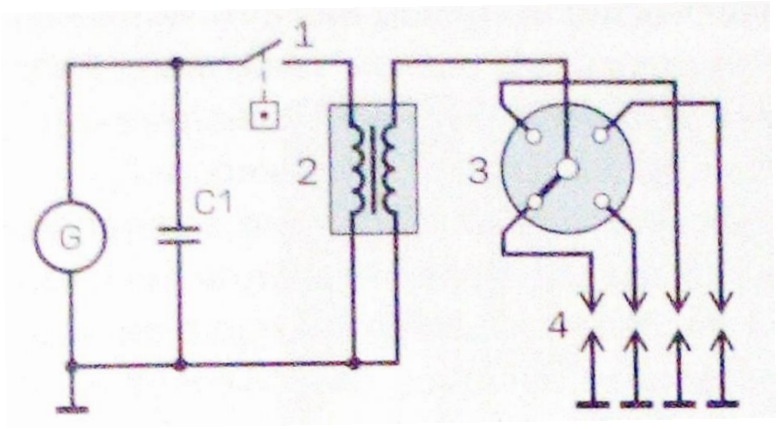

Figure 2.2.47. Battery ignition circuits:
1 — breaker contacts; 2 — ignition coil;; 3 — rotor; 4 — spark plugs; 5 — breaker-distributor; G-generator; C — capacitor

2.2.15.1. Principle of operation of the contact ignition system

When low-voltage current passes, the primary winding of the ignition coil, together with the core and the ring-shaped magnetic circuit, creates a strong magnetic flux. When the breaker contacts open, the supply of low-voltage current stops, and the magnetic flux disappears. At this time, an EMF of self-induction of up to 300 V is induced in the primary winding. This voltage is transformed in the secondary winding up to 28,000 V.

The EMF of self-induction in the primary winding during the opening of the breaker contacts is directed opposite to the primary current and, at the initial moment of contact opening, creates a spark between them, which prevents the rapid disappearance of the current and, consequently, the magnetic flux, as a result of which the EMF of self-induction in the primary winding of the coil is significantly reduced, leading to a strong decrease in voltage in the secondary winding as well. In addition, severe burning of the contacts occurs due to strong sparking between them. To increase the EMF of self-induction and reduce sparking and contact burning, a capacitor is used.

When starting the engine with a starter, the voltage at the battery terminals sharply decreases, causing a reduction in current in the primary ignition circuit. To increase the current in the primary circuit, the resistor is automatically short-circuited when the starter is engaged.

2.15.2. Elements of the ignition system

The ignition coil is used to convert low-voltage current into high-voltage current necessary to create a spark between the electrodes of the spark plug.

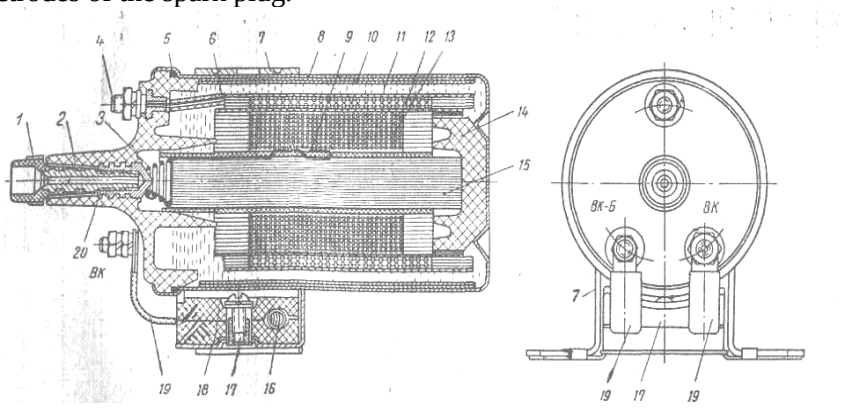

Figure 2.2.48. Ignition coil

Figure 2.2.48 shows the ignition coil. On the core 15, assembled from soft steel plates, a paper tube with the secondary winding 13 is placed, followed by a tube with the primary winding 12. This arrangement of windings improves heat dissipation from the primary winding to the casing.

The primary winding consists of 300 turns of wire with a diameter of 0.7 mm. The secondary winding of the ignition coil has 20,000 turns of wire with a diameter of 0.1 mm.

Between the coil casing and the primary winding, there is a ring-shaped magnetic core 10, designed to enhance the magnetic flux created by the current in the primary winding. For better cooling, the coil is filled with oil.

The capacitor charges from the self-induction current when the breaker contacts open, reducing sparking between the contacts. When the breaker contacts are open, the charged capacitor discharges through the primary winding, creating a reverse current in it, which accelerates the disappearance of the magnetic flux and contributes to increasing the self-induction EMF in the primary winding.

Breaker-distributor

The breaker-distributor usually rotates from the drive of the oil pump or camshaft. The normal gap between the breaker contacts is 0.35–0.45 mm. Increasing the gap reduces the closed contact time and the current in the primary circuit, while decreasing the gap increases sparking between the contacts.

The hole in the distributor cap serves to remove nitrogen acid vapor and ozone, which form from nitrogen and oxygen present in the air during sparking between the rotor electrode and the cap electrodes. Ozone and nitrogen acid cause strong corrosion of the contacts and other distributor parts. A film of nitrogen acid on the inner surface of the distributor cap can cause current leakage to the "ground" or between the cap electrodes. The carbon contact is also a resistance in the secondary ignition circuit.

Ignition timing regulators

The ignition advance angle is the crankshaft rotation angle from the moment the spark occurs at the spark plug to the piston reaching TDC.

The ignition advance depends on the mixture burning speed and the engine crankshaft speed. The higher the burning speed, the less advance is needed; the higher the crankshaft speed, the earlier the ignition angle should be.

The burning speed of the mixture increases when the fuel mixture is enriched, which occurs with a higher cylinder filling factor, and decreases with an increase in the residual gas factor. Therefore, at a small throttle opening, when the filling factor is low and the residual gas factor is high, burning will be slow, and the advance should be increased; at larger throttle openings, it should be reduced.

The required ignition advance is automatically regulated depending on the crankshaft speed and load (throttle opening degree). To accomplish this, breakers have a centrifugal regulator that automatically changes ignition timing based on crankshaft speed, and a vacuum regulator that changes timing according to engine load.

Spark plugs

Cars use spark plugs with high mechanical and electrical strength at high temperatures. The electrodes are made of nickel-manganese or chrome-titanium wire, resistant to corrosion. The gap between electrodes is 0.6–1.0 mm.

Spark plugs are selected according to their thermal characteristic, which can be indirectly determined by the length of the lower part of the insulator. For proper operation, the temperature of the lower part of the insulator should be 500–600 °C. At this temperature, carbon deposits on the insulator burn off. At lower temperatures, deposits may form, causing high-voltage leakage and engine misfires. At temperatures above 600 °C, premature ignition occurs.

Due to the high toxicity of tetraethyl lead, other less toxic antiknock agents were developed, such as manganese tricarbonyl (Mn(CO)3(C5H5)), nickel dicarbonyl dimer [Ni(CO)(C5H5)]2, ferrocene Fe(C5H5)2. However, these form solid deposits on cylinder walls and ceramic spark plug insulators. From these deposits, a metallized layer forms on the insulator through which the electric charge flows, preventing spark formation and ignition. Since the melting and evaporation temperatures of iron and manganese are much higher than 600 °C, self-cleaning does not occur, significantly impairing engine performance.

Spark plugs with high heat dissipation (short lower insulator length) are called "cold" and used for engines with high compression and elevated thermal regime. Plugs with low heat dissipation (long lower

insulator and wide body bore) are called "hot" and used for engines with lower compression and moderate thermal regime.

In the marking, the first letter indicates thread diameter (A – 14 mm, M – 18 mm); the number indicates the heat rating; the last letter indicates the insulator material.

2.2.15.3. Microprocessor ignition system

The microprocessor ignition system is electronic. It includes the ignition module 2 (Fig. 2.2.37), inductive sensor 10, knock sensor 5, spark plugs 6, high-voltage wires 3, and electronic control unit (ECU) 15. The ignition module contains a switch and two ignition coils. Each coil provides high-voltage impulses to two spark plugs of cylinders whose pistons are currently in opposite stroke phases. For example, if the piston of the first cylinder is at TDC at the end of the compression stroke, the piston of the fourth cylinder is at TDC at the end of the exhaust stroke. A spark occurs simultaneously in the plugs of the first and fourth cylinders. Since the working mixture is prepared in the first cylinder, ignition occurs there. In the fourth cylinder, there is no mixture, so the spark fires idly. On the next crankshaft rotation, the mixture is prepared and ignited in the fourth cylinder, while the spark in the first cylinder fires idly. Likewise, working and idle strokes alternate between the second and third cylinders, with a half-turn offset relative to the first and fourth cylinders.

The inductive sensor 10 reads data from the slotted trigger disk 9 and generates a signal through the ignition module 2 to the ECU. The ECU uses this information to calculate the crankshaft position, its rotational speed, and according to the programmed algorithm, determines the ignition timing and sends a control signal to the ignition coil.

The knock sensor 5, during abnormal engine operation (knocking), generates a signal proportional to the knock intensity. The ECU, based on this signal, reduces the ignition advance angle to prevent knocking.

During engine start, when the crankshaft speed is below 400 rpm, the ignition module 2 controls the spark timing. At speeds above 400 rpm, this function is taken over by the ECU, which considers all driving and engine operating conditions.

2.3 Transmision

Automotive transmissions are an essential field in mechanical engineering, having a significant impact on the performance of modern vehicles. This chapter aims to explore the complexity and diversity of transmissions used in the automotive industry, analyzing not only the operating principles, but also the recent technological innovations that have revolutionized this sector. In the context of the rapid evolution of technology, automotive transmissions have evolved from purely mechanical solutions to complex systems that integrate electromechanical components and advanced software. This transition has been driven by the increasing demands on energy efficiency, performance and user comfort. For example, automatic and continuously variable transmissions (CVTs) provide a superior driving experience, optimizing fuel consumption and reducing carbon emissions. These types of transmissions allow for quick adaptation to the road conditions and the user's driving style, thus contributing to a smoother and more enjoyable experience. An important aspect of automotive transmissions is the interaction between different types of transmissions, including mechanical, hydrostatic, and electromechanical. Each type of transmission has specific advantages and disadvantages, influencing not only the performance of the vehicle, but also the costs of production and maintenance. For example, manual transmissions are often valued for the control they give the driver, but they can be less fuel-efficient compared to modern automatic transmissions. On the other hand, automatic transmissions can reduce driver fatigue in heavy traffic conditions, but they can involve higher costs in both purchase and maintenance. Comparative analysis of these systems can provide valuable insights into future trends in vehicle design. In addition, it is essential to examine the impact of the advancement of digital technologies on automotive transmissions. Advanced software allows the operation of transmission systems to be optimized through algorithms that constantly analyze driving conditions and adjust parameters to maximize efficiency. This integration of information technology with mechanical engineering not only improves vehicle performance, but paves the way for the development of innovative solutions such as autonomous driving. In summary, the chapter will provide a comprehensive view of the evolution of automotive transmissions, highlighting their importance in the context of the sustainable development of the automotive industry. By exploring the diversity of existing systems and emerging innovations, we aim to highlight the crucial role that transmissions play in shaping the future of mobility. This analysis will contribute not only to a better understanding of current technologies, but also to anticipate future directions in the development of modern vehicles [1].

2.3.1 Clutch

The automotive clutch performs essential functions in the transmission system, helping to brake the car to a standstill and limiting the maximum torque values in the transmission and engine components, thus acting as a safety coupling. It also isolates torsional vibrations generated by engine operation and the vehicle's movement on the road, ensuring increased comfort for passengers and protecting mechanical components. Clutch construction (Figure 2.3.1) consists of three main parts: the driving part, the driven part and the drive system. The driving part, represented by the flywheel and clutch mechanism, includes all the clutch elements that are permanently connected to the crankshaft of the engine. This part is always in the same motion mode as the crankshaft, thus ensuring constant synchronization between the engine and transmission. The driven part consists of the clutch disc and the clutch shaft (if it exists as a separate part). It includes the elements that are permanently connected to the primary shaft of the gearbox, having a similar movement regime to it. This interconnection allows the efficient transfer of the power generated by the engine to the vehicle's wheels. The drive system consists of the decoupling sleeve, the fork and an external control device, which can be mechanical or hydraulic. This system comprises all the elements involved in establishing or breaking the link between the leading party and the led party, called the coupling link. The engaged state of the clutch corresponds to the existence of this linkage, while the disengaged state refers to the unwinding of the linkage. The transition of the clutch from the disengaged state to the coupled state is achieved by the clutch action, and vice versa, the transition from the coupled to the disengaged state is achieved by unlocking. Depending on the type of coupling link, clutches can be classified into: Mechanical clutches: They use the frictional forces generated between the front surfaces of the driving parts and driven under the action of normal downforce forces developed in rigid or elastic mechanical systems. Hydrodynamic clutches (hydroclutches): These use a liquid to achieve the coupling linkage, based on the principles of rotary hydraulic machines. Electromagnetic clutches: In this case, the coupling bond is generated by an induced electromagnetic field between the driven and driving assembly. Through these

features and functionalities, the clutch plays a crucial role in ensuring optimal vehicle performance, facilitating both driving comfort and the safety of mechanical operations.

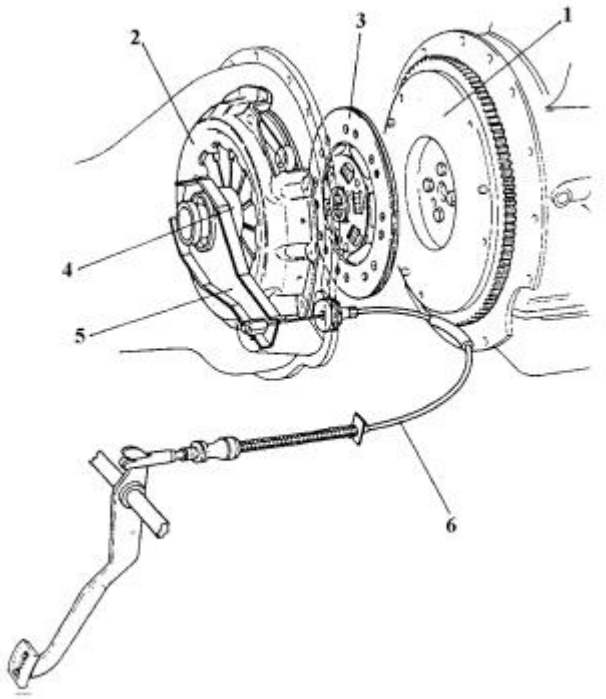

Figure 2.3.1 General components of the classic clutch
1 - Flywheel; 2 - Pressure plate; 3 - Clutch disc; 4 - Decoupling sleeve; 5 - Release fork; 6 - Clutch cable (mechanically operated)

An essential feature of internal combustion engines is the inability to start them under load. To initiate engine operation, it is necessary to break the connection between the engine and transmission, either by disengaging the clutch or by placing the gearbox in the neutral position (neutral). If the second option is chosen, when starting the engine, the clutch and all gearbox components that are permanently connected to the primary shaft will be set in rotational motion. These elements, due to their moment of inertia, represent a task that the engine starting system must overcome. Therefore, in order to facilitate the starting of the engine, especially at low temperatures, it is recommended to break the connection between the engine and the transmission by derailing. Once the engine has been started, the acceleration of the car from a standstill is achieved by progressively engaging the engine's crankshaft, which rotates at a speed of approximately 700-900 revolutions per minute, with the transmission connected to the drive wheels initially at rest. This progressive engagement is carried out by activating the clutch and begins when the front friction surfaces of the driving and driven parts come into contact. From this point, the car's acceleration process from a standstill overlaps with the clutch operating phases. The operating regimes of the car can be classified into two categories: transient dynamics and stabilized dynamics. Transient dynamic regimes are characterised by rapid variations over time and significant fluctuations in the moments that demand the vehicle's powertrain. These speeds manifest themselves, for example, when starting from a standstill with sudden clutch engagement, during sudden braking without disengaging the clutch, or when the wheels pass over obstacles and large bumps. On the other hand, stabilized dynamic regimes are characterized by the variation of momentum around an average value and occur during the movement of the car on roads with average or good conditions. These variations are caused by local changes in the specific drag coefficient of the road. In order to protect the powertrain from the high dynamic loads generated in the aforementioned situations, when the clutch is engaged, clutch slippage is used. The coupling connection is achieved by frictional forces that develop between the front contact surfaces under the influence of axial pressing forces generated by the mechanical pressing device. This connection is of a limiting nature, determined by the capable moment of the clutch. When the capable moment is exceeded, the clutch will slip, which means that in its engaged state it will not be able to transmit a moment greater than its corresponding value, thus behaving as a non-destructive safety coupling. In the event of sudden clutch engagement, there is a strong deceleration of the contact device of the driving part on the front surface of the driven part. This generates an inertial force that can increase by 5 to 10 times the axial forces required to maintain the normal clutch engagement state. Thus,

by significantly increasing the capable moment of the clutch, the protection of the powertrain by slippage becomes ineffective. The automobile as a whole constitutes an elastic system which, during operation, is constantly subjected to the action of oscillations. Within the powertrain, the main source of oscillations is the internal combustion engine, and the disturbing factor is the torque generated by the engine, which puts a strain on the crankshaft. This moment consists of a fundamental component associated with the operating speed and a series of harmonics. Another continuous source of oscillations comes from the moment of forward resistance, influenced by road conditions and travel regime. This source is often random. The transmission of these quantities to the powertrain can create risks when one of the group's own frequencies overlaps with a harmonic of the disruptive moment, generating the danger that certain components reach resonant areas. In such situations, the amplitude of oscillations can increase sharply, risking damage to the mechanical organs of the group. In order to prevent the occurrence of the aforementioned resonance phenomena, the following measures can be implemented:

•**Variation of the elastic characteristics of the transmission**: This ensures that resonance will not occur in operating modes.

•**Introduction of a damping element in the transmission**: This element will be able to absorb the energy of oscillations.

•**Implementation of an element that gives non-linear character to the elastic characteristic of the transmission**.

The simplest approach is to combine an additional elastic element with a cushioning element. By integrating additional elastic elements into the driven part of the clutch Figure 2.3.2, the risk of high-frequency resonance is eliminated. In order to enhance the insulation qualities, it is recommended that the additional elastic element exhibits a non-linear characteristic, which is frequently achieved by using several springs that successively come into operation. However, the stiffness of this elastic element cannot be reduced below a certain limit, which causes its effectiveness to decrease at low frequencies. Therefore, in addition to the additional elastic element, it is necessary to use a damper to prevent the occurrence of resonance at low frequencies.

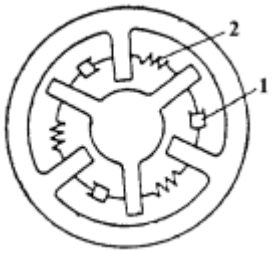

Figure 2.3.2 Symbolization of clutch disc and elastic elements, 1-shock absorber, 2-elastic element

The mechanical clutches used in the construction of passenger cars are generally spring clutches. The construction organization schemes of these clutches are presented in Figure 2.3.3. The driving part, which is connected to the crankshaft 1 of the engine, includes flywheel 2, to which the clutch mechanism housing 4 is mounted by means of screws 3. Pressure disc 5, which is solidary in rotation with casing 4, has relative translational mobility with respect to it. In order to generate the force required to maintain the clutch engaged state, pre-compressed peripheral springs 7 (Figure 2.3.3,a) and the central arc diaphragm 9 (Figure 2.3.3,b). Peripheral springs (position 7, Figure 2.3.3,a), uniformly arranged on the periphery of the pressure disc, are helical springs of drawn wire with linear characteristic. The operating states of the clutch are determined by changing the elastic arrow of these springs, and for this, the clutch is equipped with disengagement levers 6. In the case of the diaphragm center spring clutch (Figure 2.3.3 b), the functions of the pressure springs and the decoupling levers are performed by a thin steel disc (position 9), having a truncated conical shape and being equipped with elastic arms formed by radial cuts. In this mechanism, the spring rests on the pressure disc 5 through the circle of the large base and on the casing 4 through the support 8 in the middle area. The positioning of the spring in different stages of the elastic characteristic, corresponding to the operating states, is achieved by changing the height of the tapered trunk under the action of a deforming force applied to the circle of the small base.The driven part is represented by the assembly of the driven disc 10, which is mounted on the shaft 11 through grooves; This is, in most cases, the primary shaft of the gearbox. The control part consists of lever 13 and disengagement sleeve 12. Under normal conditions, the clutch is in a engaged state. The 'normally coupled' state results from the action of pressure springs 7 (Figure 2.3.3,a) and

aperture arc 9 (Figure 2.3.3, b), which, being mounted pre-compressed between the casing 4 and the pressure disc 5, tend to relax and thus tighten the driven disc between the flywheel and the pressure disc.

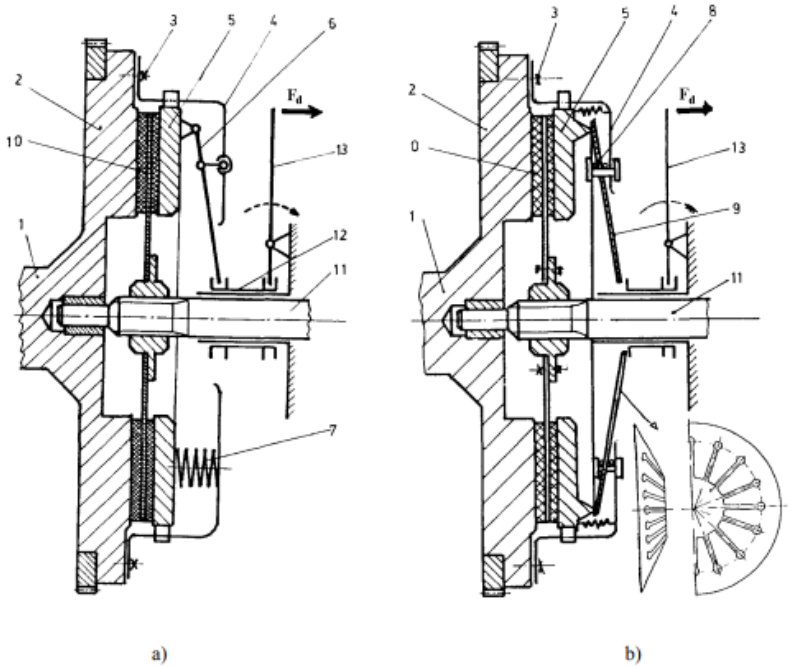

Figure 2.3.3 Mechanical clutch with springs and diaphragm

In the case of central diaphragm spring clutches, depending on the direction of action of the disengagement force, there are several constructive solutions, the most common of which are: the compression detachable diaphragm spring clutch, also known as the pressed clutch, and the tensile detachable diaphragm spring clutch, called pulled clutch. A commonly used design variant is the pressed-type diaphragm spring clutch (Figure 2.3.4), found in most small and medium-sized cars, as well as in light vans. It includes the following components on the driving side: flywheel 1 of the engine, clutch housing 2, pressure disc 3 and diaphragm spring 4, mounted pre-compressed in the housing. The rotational solidification between the pressure disc 3 and the casing 2 is achieved by multiple elastic blades 5, which allow the relative translations necessary for disengagement and wear compensation. In the engaged state, which represents the normal condition of the clutch (position C Figure 2.3.4), diaphragm spring 4, pre-compressed between the pressure disc and the housing, presses on the pressure disc through the diameter of the large base. This action exerts the force required to keep the clutch engaged. The spring rests on the chassis 2 by means of the circular protrusion "a" drawn on the casing. For decoupling (position D Figure 2.3.4), pressing the pedal 6 causes the release lever 7, which is hinged to the clutch housing, to rotate. The decoupling sleeve 8 moves axially to the left, actuating the diaphragm spring in the area of the small base circle and rotating relative to the joint on the housing. The rotation of the spring clockwise, resting on the ring crown "b" fixed on the case 4, leads to the cessation of the pressing action on the pressure disc. By means of the multiple blades 5, which act as springs, the pressure disc 3 retracts towards the housing, thus disengaging the clutch by unwinding the frictional connection between the driven disc 9 and the driving surfaces of flywheel 1 and pressure disc 3.

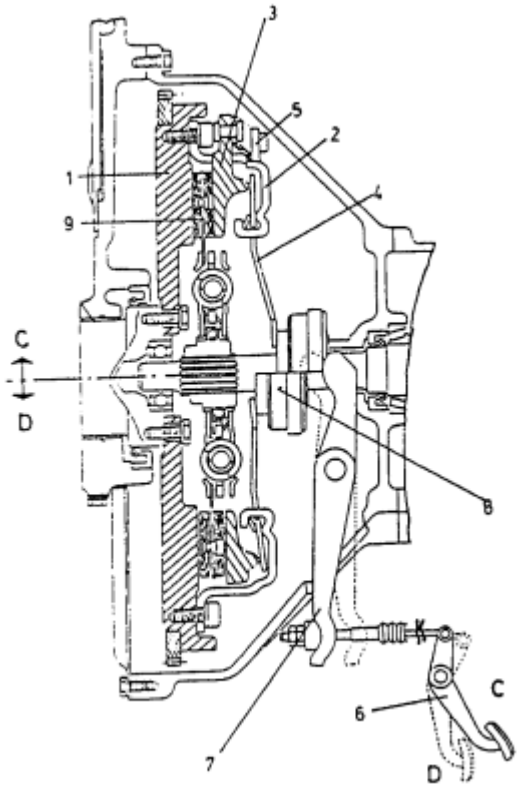

Figure 2.3.4 Diaphragm spring clutch

Mechanical clutch design

The flywheel is an essential component of mechanical clutches, having the role of connecting the engine with the transmission. It serves as a reservoir of kinetic energy, helping to stabilize the engine's speed and ensure its smooth operation. The flywheel is made of resistant materials, capable of withstanding the mechanical and thermal stresses generated during engine operation. Through its interaction with the pressure disc and the driven disc, the flywheel facilitates the transmission of the engine's momentum to the transmission, thus allowing the vehicle to move efficiently. In addition, the flywheel helps to absorb vibrations and reduce speed fluctuations, thus contributing to the comfort of the driver and passengers. This component is crucial for the overall performance of the transmission system and for the durability of the clutch.

Steering wheels for motor vehicle clutches can be classified according to several criteria, including the type of construction, function and application:

- **Solid Steering Wheels**: Made from a single piece of material, they offer rigidity and durability, being used in standard applications Figure 2.3.5



Figure 2.3.5 One-piece flywheel

- **Dual Mass Flywheel (DMF)** Figure 2.3.6: These flywheels are composed of two masses separated by a system of springs and shock absorbers, with the role of reducing vibrations and engine noise.



Figure 2.3.6 Flywheel with double table

Pressure plate

The pressure plate is an essential component of the clutch system, having the main role of applying the necessary force to keep the clutch in a engaged state. It is located between the flywheel and the driven disc and is responsible for transmitting the momentum from the engine to the transmission.

The pressure plate is usually made of a material that is resistant to wear and high temperatures, such as steel or metal alloys. It consists of a contact surface that interacts with the pressure disc and is provided with springs or damping mechanisms that help to apply the force evenly. The main functions of the pressure plate include:

1. **Maintaining Engagement**: When the clutch is engaged, the pressure plate presses the driven disc between the flywheel and the pressure disc, thus ensuring the efficient transmission of engine power to the transmission.
2. **Disengagement**: When the driver presses the clutch pedal, the pressure plate retracts, allowing the driven disc to disengage from the steering wheel. This makes it easy to change gears without causing mechanical shocks.
3. **Wear Compensation**: The pressure plate is designed to absorb and compensate for wear that occurs during clutch use. Springs or elastic mechanisms in its construction allow for little relative movement, thus reducing the risk of premature damage.

Types of Pressure Plates

There are several types of pressure plates used depending on the clutch design:

- **Helical Spring Pressure Plate** Figure 2.3.7: It is the most common shape for the clutches of agricultural machinery and vans. It uses coil springs to apply the necessary force to the driven disc.



Figure 2.3.7 Coil Spring Pressure Plate

- **Diaphragm Pressure Plate** Figure 2.3.8: Used in modern clutches, this plate has a truncated tapered shape and is capable of applying a uniformly distributed force over the entire surface of the driven disc. This allows for more efficient action and quick response to commands.



Figure 2.3.8 Diaphragm pressure plate

The Importance of the Pressure Plate

The pressure plate plays a crucial role in the operation of the clutch system, influencing both vehicle performance and driver comfort. A well-designed pressure plate ensures smooth and efficient coupling, thus contributing to the durability of the entire drive system. Damage or wear of the pressure plate can lead to problems such as clutch slippage, difficulty shifting gears, or even complete system failure.

Driven disc Figure 2.3.9 It is generally made of a wear-resistant material, such as steel or special compounds that can withstand extreme temperature and pressure conditions. It is equipped with friction surfaces made of a friction material, which interact directly with the pressure plate, thus ensuring the efficient transmission of engine power. The main functions of the driven disc include:

1.Transmission of Engine Momentum: The driven disc takes the moment generated by the engine through the pressure plate and transmits it to the primary shaft of the gearbox. This function is essential for ensuring the mobility of the vehicle.

2.Coupling and Disengagement: During the coupling process, the driven disc joins the flywheel via the pressure plate, thus allowing power to be transferred. During disengagement, by operating the clutch pedal, the disc detaches from the flywheel, thus interrupting the transfer of power and allowing gear changes.

3.Wear Compensation: The driven disc is designed to absorb some of the wear generated during clutch operation. By using materials with specific properties, it can withstand constant friction and temperature variations.

4.



Figure 2.3.9 Clutch disc

Types of Driven Discs

Driven discs can be classified according to several criteria:

▪Flat Surface Discs: These have a uniform surface area and are used in standard applications where no special features are required.

▪Textured Surface Discs: Designed to improve grip and reduce slippage, these discs are often used in high-performance vehicles or in extreme conditions.

▪Multilayer discs: These discs are composed of several layers that provide increased wear resistance and better vibration absorption capacity.

The Importance of the Driven Disc

The driven disc plays a crucial role in the efficient operation of the clutch system. Optimal performance ensures not only efficient power transmission, but also driver comfort by avoiding mechanical shocks during gear changes. Damage to the driven disc can lead to problems such as clutch slippage, difficulty shifting gears, or even complete system failure. Although the usual variant involves the use of a single driven disc, there are constructive solutions in which several clutch discs can be used. These systems, called multi-plate clutches, are designed to handle higher torsional loads and are typically found in performance vehicles or heavy industrial machinery.

Multidisc clutches Figure 2.3.10. Multi-plate clutches are designed to maximise the friction surface, allowing for the transmission of greater engine torque without increasing clutch size. The use of multiple discs allows for even pressure distribution and reduced wear, thus contributing to a longer component life.

Structure of multi-disc clutches. The structure of a multi-plate clutch includes several driven discs interspersed with pressure discs. They are tightened together by a spring system or hydraulic mechanism,

thus ensuring efficient moment transmission. At the moment of decoupling, the discs separate, interrupting the flow of power.



Figure 2.3.10 Multi-disc clutches

Multi-disc clutches are used in various applications, including:

- Performance motorcycles: To cope with the high power generated by their engines.
- Racing vehicles: Where efficient momentum transmission and wear resistance are essential.
- Heavy industrial machinery: In equipment such as tractors or construction machinery, where high torsional loads are required.

Advantages and Disadvantages of Multi-Disc Clutches

Advantages:

- Higher motor moment transmission capacity: Due to the extended friction surface.
- Extended service life: Uniform pressure distribution reduces wear.
- Compact dimensions: Suitable for applications where space is limited.

Disadvantages:

- Greater construction complexity: It requires more precise design and manufacturing.
- Higher costs: Due to the greater number of components and the complexity of the manufacturing process.

The release sleeve is an essential component of the clutch system, having the role of facilitating the clutch disengagement when the driver presses the clutch pedal. It is an integral part of the drive mechanism and contributes to the efficient operation of the clutch. Function of the Disengagement Sleeve: The Disengagement Sleeve acts by axial displacement, which allows the movement of the pressure disc. When the clutch pedal is pressed, the sleeve moves, actuating the springs or the pressure disc, which leads to the separation of the disc driven by the flywheel. This action interrupts the transfer of power from the engine to the transmission, thus allowing gears to be changed without causing shock or damage. Disengagement Sleeve Structure: The Disengagement Sleeve is made of wear-resistant and high-temperature materials, having a cylindrical shape that matches the other components of the clutch system. Usually, it is equipped with a guide mechanism that ensures smooth and precise movement. The pressure bearing, also known as the release bearing, is an essential component of the mechanical clutch system. It plays a vital role in the process of coupling and disengaging the transmission engine, facilitating smooth and efficient clutch actuation. The main function of the pressure bearing is to reduce friction between the rotating and stationary components of the clutch actuator. When the driver presses the clutch pedal, the pressure bearing comes into contact with the pressure mechanism (usually the diaphragm spring or release levers) and allows for smooth movement, thus minimizing wear and effort required to operate the clutch. The release fork, also referred to as a clutch fork or disengagement fork, is an essential mechanical element in the clutch drive system. Its main role is to convert the driver's movement on the clutch pedal into the force needed to operate the pressure bearing, thus facilitating clutch disengagement. The release fork has the role of transmitting the force from the drive system (cable, hydraulic cylinder) to the pressure bearing, which, in turn, drives the clutch pressure mechanism. This action leads to the separation of the disc driven by the flywheel, thus interrupting the transmission of power from the engine to the transmission.

Although the classic structure of a mechanical clutch includes elements such as the flywheel, driven disc, pressure plate, pressure bearing and release fork, it is important to note that there are various constructive configurations, including multi-plate clutches and coil spring or diaphragm systems, each specifically adapted to performance and load requirements. These variations may involve additional elements

to optimise the operation of the clutch under particular conditions of use. In conclusion, mechanical clutches of all types, through the diversity of their components and configurations, play a crucial role in ensuring the efficient and reliable operation of vehicles, allowing precise control over the transmission of power from the engine to the wheels. Component elements such as the flywheel, pressure plate, driven disc, pressure bearing and release fork are just a part of what a mechanical clutch can include, with the structural complexity being tailored to the specific needs of the vehicle and application.

2.3.2 Gear box

In the context of automotive engineering and power transmission systems, the gearbox is an essential mechanical assembly responsible for adapting the characteristics of the engine moment to the variable requirements imposed by the driving conditions. This adaptation is achieved by changing the gear ratio between the crankshaft and the drive wheels, thus allowing the optimization of vehicle performance in various operational scenarios. The internal combustion engine, the primary source of energy in most vehicles, generates an engine torque that varies according to the speed. However, the current demands on the drive wheels are influenced by a multitude of factors, such as travel speed, road slope, payload and aerodynamic resistance. Consequently, a flexible interface capable of adapting the characteristics of the motor moment to these variable requirements is required. The gearbox fulfills this function, allowing efficient use of engine power and optimization of vehicle performance. Principles The gearbox works on the principle of transmission ratio variation by means of gears with gears. By selectively combining different pairs of gears, different gear ratios can be achieved, each optimized for a specific range of speeds and loads. Thus, at low speeds and high loads, high gear ratios are used, which amplify the engine torque and allow the overcoming of forward resistance. At high speeds and low loads, small gear ratios are used, which reduce engine speed and optimise fuel consumption. Depending on how the gear ratio variation is achieved, several types of gearboxes are distinguished, each with specific advantages and disadvantages:

- Manual gearboxes: These involve direct driver intervention in gear selection, providing precise control over the transmission.
- Automatic gearboxes: They change gears automatically, based on predefined algorithms, offering increased comfort.
- Continuously variable automatic gearboxes: These allow for continuous variation of the gear ratio, eliminating fixed gears and optimizing performance and fuel consumption.
- Semi-automatic gearboxes: Combines elements of manual and automatic gearboxes, offering the possibility of manual gear changes, but also automatic operation in certain situations.

Regardless of the type of construction, a gearbox includes the following essential components:

- Shafts: The primary, secondary, and intermediate shafts (in some cases) ensure the transmission of rotational motion between the gears Figure 2.3.14.
- Gears: Sprockets with different sizes and configurations allow for variation of the gear ratio.
- Synchronizers: Facilitates smooth and silent engagement of the gears, reducing shock and wear.
- Control mechanism: Allows you to select the desired gear, either manually or automatically.
- Housing: Protects the internal components of the gearbox and ensures structural rigidity.

The manual gearbox with two shafts is a constructive configuration frequently found in vehicle transmission systems, being appreciated for its simplicity, efficiency and reliability. This structure uses two main shafts – the primary shaft and the secondary shaft – to achieve the variation of the transmission ratio between the motor and the drive wheels. A manual gearbox with two shafts is composed of the following main elements:

1. Primary Shaft (Input Shaft): This receives the engine moment directly from the clutch and is usually coaxial with the crankshaft of the engine. The primary shaft carries a number of gears that are permanently engaged with the corresponding gears on the secondary shaft.
2. Secondary Shaft (Output Shaft): This transmits the moment to the differential and, subsequently, to the drive wheels. Gears are mounted on the secondary shaft that can be selectively coupled with the gears on the primary shaft, thus allowing the transmission ratio to be varied.
3. Sprockets: The pairs of sprockets on the two shafts have different sizes, allowing different gear ratios to be obtained. These wheels are usually permanently engaged, and selective coupling is carried out by means of synchronizers.
4. Synchronizers Figure 2.3.11: These devices facilitate the smooth and silent engagement of the gears, equalizing the speeds before coupling and thus reducing shocks and wear.



Figure 2.3.11 Synchronous gears

5. Control Mechanism Figure 2.3.12: It consists of the gear lever and the related linkage, allowing the driver to select the desired gear. The control mechanism acts on the coupling forks, which move the synchronisers and engage the gears. Control lever 1, articulated to support 2 by two cylindrical joints, has the role of transmitting two types of movements. By means of cable 3, it transmits the coupling-disengagement movement inside the gearbox to the internal control system. In addition, through a mechanism 4, which uses a system of levers and cables, the lever also transmits the selection movement. This mechanism 4 has the function of changing the direction of movement, transforming a transverse movement into a longitudinal one.

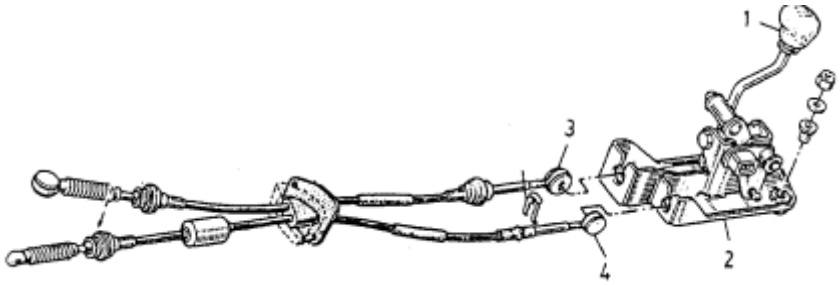

Figure 2.3.12 Manual gearbox control mechanism

Gearshift grilles, also known as shift schemes, are essential elements in the interior design of vehicles equipped with manual transmissions. They serve as a visual and tactile guide for the driver, indicating the correct gear lever positions for each gear and thus ensuring smooth and precise gear changes.

Main Functions

The grids for shifter movement perform several important functions:

Visual Guidance:

- It provides a graphical representation of the gear lever positions for each gear, including reverse.
- It helps the driver to quickly and accurately locate the desired gear, thus reducing reaction time and the risk of errors.

Touch Guidance:

- It creates a distinct tactile feel for each gear, allowing the driver to feel the correct lever position without having to look at the grille.
- It contributes to a more intuitive and safer driving experience.

Ergonomics:

- The grille design is optimised to match the natural movements of the driver's hand, thus reducing fatigue and improving comfort.
- The positioning and shape of the grille are carefully chosen to ensure easy accessibility and efficient use.

Types of Grids

There are several types of grids for shifter movement, each with specific advantages and disadvantages:

"H" Shaped Grid:

- The most common shape, used in most vehicles with manual transmission.
- It offers an intuitive and easy-to-understand gear layout, with the lower gears (1 and 2) located on the left side and the higher gears (3, 4, 5, 6) on the right.



Figure 2.3.13 Gear selector grille

Sequential Grid:

- Used in racing vehicles and some sports motorcycles.
- It allows shifting gears in a sequential order by pushing or pulling the lever.
- It provides fast and accurate gear changes, but can be more difficult to use in urban traffic.

Grid with Special Pattern:

- Used in some older vehicles or in vehicles with special transmissions.
- It can have different shapes and layouts, specifically adapted to the requirements of the transmission system.

6. Housing: This protects the internal components of the gearbox and ensures structural rigidity.

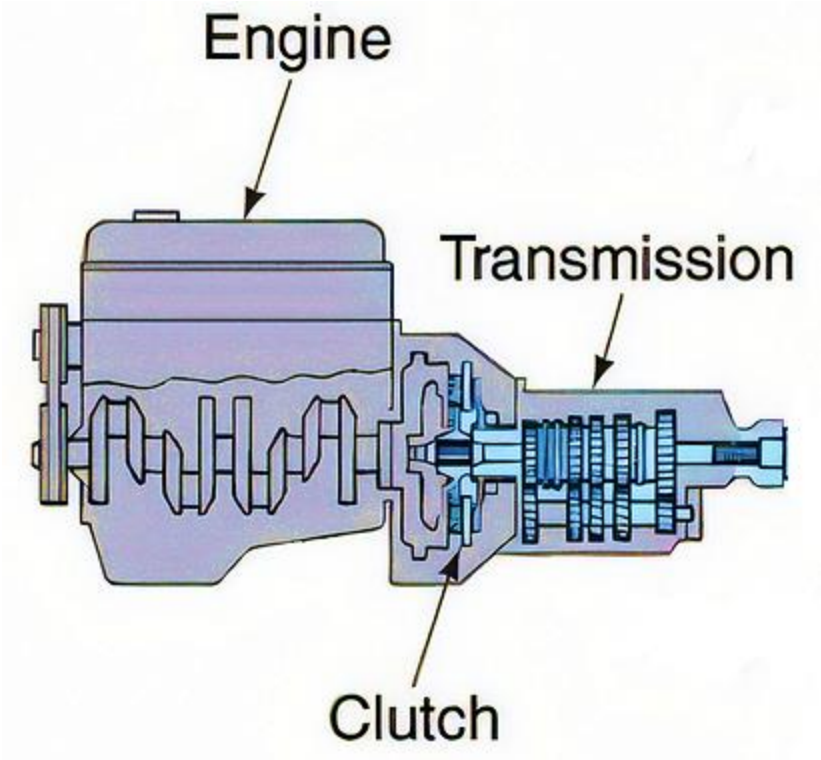

Figure 2.3.14 Manual transmision [2]

The operation of the two-shaft manual gearbox is based on the selection of the desired gear by means of the control mechanism. When the driver operates the gear lever, the coupling forks move the synchronisers, which engage with the corresponding gears on the secondary shaft. This coupling makes a rigid connection between the primary shaft and the secondary shaft, transmitting the motor moment with a certain transmission ratio. Advantages of the Two-Shaft Manual Gearbox

- Construction Simplicity: The two-shaft structure is relatively simple, which makes it easy to manufacture and maintain.
- High Efficiency: Direct transmission of the moment through gears reduces power losses.
- Reliability: The reduced number of components and simplicity of construction contribute to increased reliability.
- Low Cost: Manufacturing and maintenance costs are generally lower compared to other types of gearboxes.

Disadvantages of the Two-Shaft Manual Gearbox

- Need for Driver Intervention: Shifting gears requires direct driver intervention, which can be tiring in certain situations.
- Possibility of Handling Mistakes: Incorrect handling of the gear lever can lead to premature wear of the synchronizers or even damage to the gears.

The two-shaft manual gearbox is widely used in passenger cars, vans and other light commercial vehicles. It is valued for its balance between cost, efficiency and reliability, making it a suitable option for a wide range of applications. The three-shaft gearbox is a design variant used especially for rear-wheel drive vehicles with longitudinally located engines. This includes a primary tree Figure 2.3.15 1, a secondary one 3 and an intermediate one 2, also called a countershaft. The primary shaft receives power from the engine, and the secondary shaft transmits it to the differential. The countershaft has the role of intermediating the transmission of power and changing the direction of rotation. Compared to the two-shaft gearbox, the three-shaft gearbox offers a more robust construction and the ability to withstand higher torque moments. The presence of the countershaft allows for more efficient load distribution and longer component life. However, the three-shaft box is generally more complex and heavier than the two-shaft one.

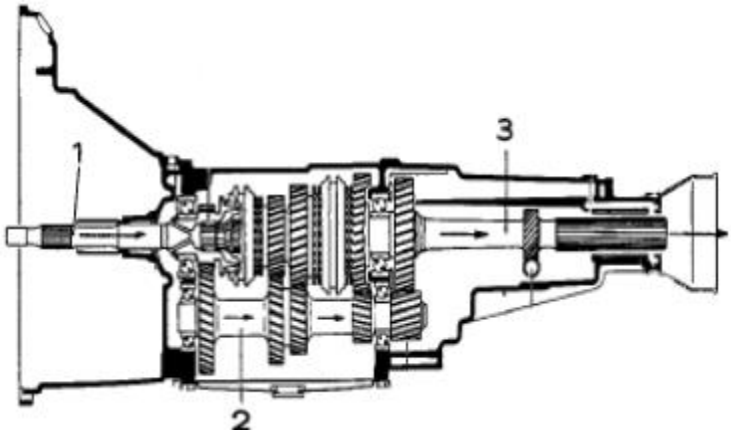

Figure 2.3.15 3-shaft gearbox [3]

There are several types of gearboxes that deviate from the classic manual design with 2 or 3 shafts. These include automatic gearboxes (AT), continuously variable gearboxes (CVTs), semi-automatic gearboxes (AMTs), dual-clutch gearboxes (DCTs), and planetary gearboxes.

1. Automatic Gearboxes (AT)

- Operation: Uses a hydraulic torque converter Figure 2.3.16 instead of a mechanical clutch to transmit power from the engine to the gearbox. Gear changes are carried out automatically by a hydraulic and electronic system, without driver intervention.
- Advantages: Increased comfort, ease of use, engine and transmission protection.
- Disadvantages: Lower energy efficiency compared to manual gearboxes, higher complexity, higher maintenance costs.



Figure 2.3.16 Hydraulic Torque Converter

2. Continuously Variable Transmissions (CVT) Figure 2.3.17

- Operation: It uses a system of pulleys and belts or chains to provide an infinite range of gear ratios between a minimum and maximum limit. There are no fixed gears, which allows the engine to always run at optimal speed.
- Advantages: Good energy efficiency, smooth acceleration, increased comfort.
- Disadvantages: Different driving feel, can be noisy, limited ability to handle large couples.

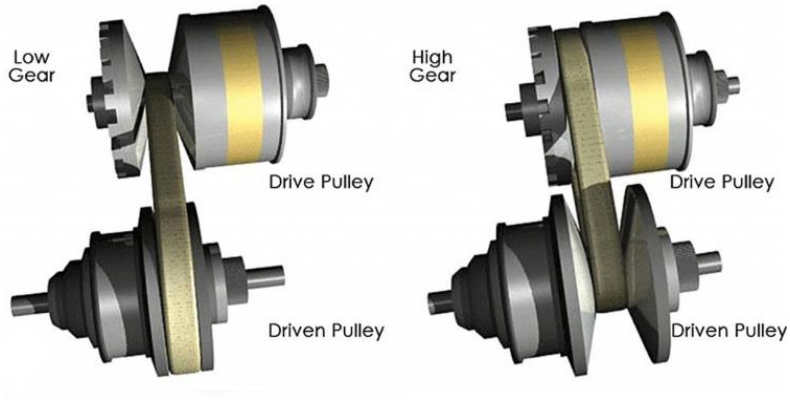

Figure 2.3.17 CVT Gearbox

3. Semi-Automatic Gearboxes (AMT)

•Operation: They are essentially manual gearboxes with an automated clutch and gear shift system. The driver can change gears manually, but the use of the clutch pedal is not required.

- Advantages: Energy efficiency similar to manual transmissions, lower costs compared to AT and DCT.
- Disadvantages: Slower and less refined speed changes compared to AT and DCT.

4. Dual Clutch Gearboxes (DCT)

- Operation: Uses two separate clutches to control two sets of gears (usually odd and even gears). This allows the next gear to be preselected, resulting in fast and linear changes.
- Advantages: Very fast gear changes, good energy efficiency, sporty driving experience.
- Disadvantages: Higher costs, higher complexity compared to conventional manual and automatic transmissions.

5. Planetary Gearboxes

- Operation: I use a planetary gear system to achieve different gear ratios. These gearboxes are often used in combination with a torque converter in automatic transmissions.
- Advantages: Durability, ability to handle large couples, smooth operation.
- Disadvantages: Complexity, high costs.

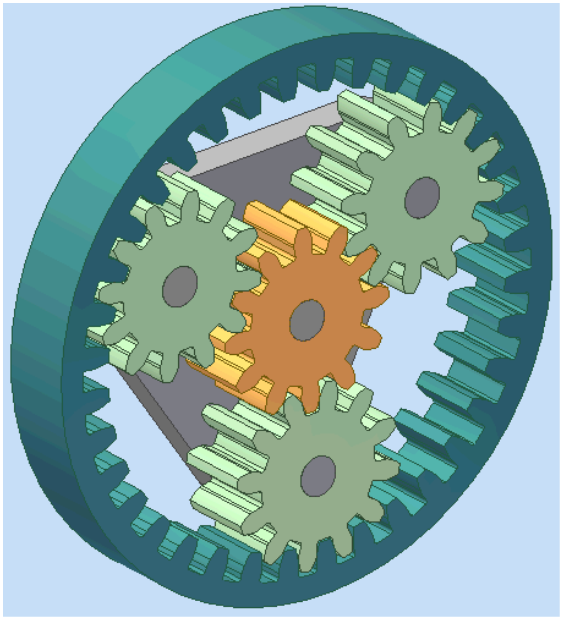

Figure 2.3.18 Planetary mechanism [4]

These types of gearboxes offer alternatives to traditional manual transmissions, each with its own advantages and disadvantages depending on the application and driver preferences.

2.3.3 Transfer gear box

The transfer case is an essential component in all-wheel drive vehicles (4x4 or AWD), having the role of distributing engine power to all wheels. This allows the vehicle to tackle difficult terrain, providing superior traction compared to single-axle drive (2WD) vehicles.

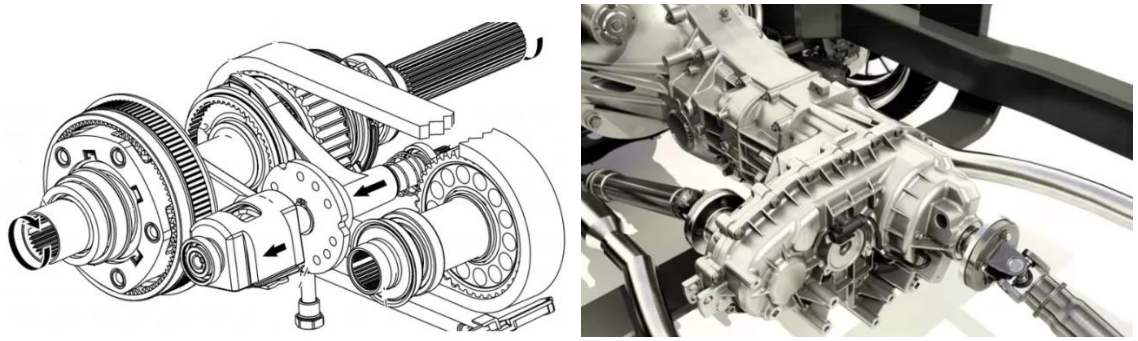

Figure 2.3.19 Transfer Box [5]

The transfer case performs the following main functions:

1. Power Distribution: Divides the power of the engine between the front axle and the rear axle.
2. Traction Mode Selection: Allows the driver to choose between different traction modes, such as 2WD, 4WD High, and 4WD Low.
3. Reduction (Low Range): Offers an additional gear ratio to increase torque to the wheels, useful in extreme off-road situations.

The transfer case is generally a compact unit, mounted in continuation of the main gearbox. The main components include:

- Input and output shafts: Transmit power from the gearbox to the axles.
- Gears: Gears that allow the selection of different traction modes and gear ratio.
- Chain or gears: They transmit power between shafts.
- Selection mechanism: Allows the driver to change traction modes.
- Center differential (in some cases): Allows differentiation of speeds between axles.

Types of Transfer Cases

There are several types of transfer cases, classified according to the mode of operation and the capacities offered:

1. Part-Time 4WD:
    - Force the 50/50 power distribution to lock between the axles.
    - It should not be used on surfaces with high grip (dry asphalt) due to the risk of damage to the transmission.
    - Suitable for extreme off-roading, where maximum traction is required.
2. Full-Time 4WD (AWD):
    - It uses a center differential to allow differentiation of revs between axles.
    - It can be used on any type of surface, without the risk of damage to the transmission.
    - Provides improved traction in varied conditions.
3. Electronic Transfer Boxes:
    - They allow the selection of traction modes by means of electronic buttons or switches.
    - They may include advanced features such as traction and stability control.

Applications:
Transfer cases are used in a wide range of vehicles, including:
- SUVs and Crossovers: To provide improved traction in winter conditions or on unpaved roads.
- Vans (Pick-up): To allow the transport of heavy loads and travel on rough terrain.
- Off-Road Vehicles: To provide maximum traction in extreme conditions.

Advantages
- Superior traction on difficult terrain.
- Improved stability in low grip conditions.
- Ability to tackle steep slopes and obstacles.

Disadvantages
- Greater structural complexity.
- Extra weight.
- Higher maintenance costs.

2.3.4 Drive shaft

Drive shafts are a critical component in the architecture of vehicle transmission systems, with the fundamental responsibility of efficiently transferring the engine torque generated by the drive unit to the drive wheels. This essential function is performed under various operational conditions, imposing rigorous requirements in terms of strength, reliability and the ability to compensate for the geometric variations inherent in the suspension and steering systems. An in-depth understanding of the role, types, associated components, materials used and maintenance procedures of drive shafts is indispensable for the design, optimization and maintenance of high-performance and sustainable transmission systems. Drive shafts are not limited only to the transmission of motor momentum, but perform a series of interdependent functions that contribute to the efficiency and stability of the transmission system:

1. Efficient Transmission of Motor Momentum: The primary function is to transfer the momentum generated by the motor to the drive wheels with minimal losses. This transmission must be carried out under varying load and speed conditions, ensuring optimal acceleration, adequate towing capacity and efficient cruising speed.
2. Absorption of Angular Variations: Suspension and steering systems generate angular variations between transmission components, such as the gearbox, differential, and wheels. Drive shafts must compensate for these variations to prevent excessive stress and damage to components.
3. Torsion and Fatigue Resistance: Drive shafts are subjected to variable and often extreme torsional loads, generated by sudden acceleration, braking and changes of direction. The materials and design must provide adequate resistance to torsion and fatigue to prevent breakage or deformation.
4. Minimization of Vibration and Noise: Vibration and noise generated by drive shafts can affect passenger comfort and indicate mechanical problems. The shafts must be dynamically balanced and include damping elements to minimize these effects.

Main Types of Drive Shafts
The diversity of applications and configurations of transmission systems has led to the development of several types of drive shafts, each optimized for specific requirements:

1. Main drive shaft Figure 2.3.20:

•Applications: Vehicles with rear-wheel drive (RWD) and all-wheel drive (4WD/AWD), where the gearbox or transfer case is separated from the drive axle.
•Structure: A rigid central tube, made of steel or aluminum, connected to two cardan joints (cardan crosses) at the ends. These joints allow momentum to be transmitted even when the shafts are not perfectly aligned.
•Features: May include intermediate mounts to reduce vibration in long shafts, especially commercial vehicles.
•Limitations: Universal joint joints can generate variations in angular velocity, especially at large angles, which can lead to vibration and noise.



Figure 2.3.20 Main drive shaft

In the transmission systems of all-wheel drive (4x4) vehicles, where engine power must be distributed to both the front and rear axles, the intermediate drive shaft shaft plays a crucial role. It serves as a direct and reliable connection between the main gearbox and the transfer case, ensuring the efficient transfer of the engine torque required to activate both axles. Without this component, the 4x4 system would not be able to function properly, limiting the vehicle's ability to tackle rough terrain and poor grip conditions. The intermediate drive shaft, although apparently simple in structure, is subject to considerable stress. It must be able to withstand large torques, angle variations generated by the suspension and vibrations inherent to the transmission system. That's why its construction is robust, using high-strength materials such as alloy steels and cardan joints designed to efficiently transmit power, minimizing losses and ensuring a long service life. In addition, the intermediate drive shaftmust be dynamically balanced to reduce vibration and noise, thus contributing to passenger comfort. In some cases, intermediate supports can be used to support the shaft and prevent deformation, especially in long-wheelbase vehicles. Proper maintenance of the intermediate drive shaft, which includes regular joint checks, lubrication and balancing, is essential to ensure optimal operation of the 4x4 system and prevent costly failures. The joints of the intermediate cardan shaft, also called cardan crosses or universal joints, are ingenious mechanisms that allow the torque to be transmitted between two shafts that are not perfectly aligned, that is, they form an angle between them. In the case of the intermediate drive shaft of 4x4 vehicles, these joints make it possible to compensate for the variations in angle that occur between the gearbox and the transfer case, generated by the movements of the suspension and the flexibility of the chassis.

The basic cardan joint is composed of four cross-shaped arms connected by bearings to two forks, each fixed to a shaft. When one shaft rotates, the drive shaft turns the rotary motion into linear motion along the arms, and then converts the linear motion back into rotary motion to drive the other shaft. This conversion allows torque to be transmitted, even if the shafts are not perfectly aligned.

Although effective, simple cardan joints have one limitation: they do not transmit rotary motion with a constant angular velocity, unless the shafts are perfectly aligned. When there is an angle between shafts, the angular velocity of the output (driven) shaft varies during a complete rotation, even though the angular velocity of the input (drive) shaft is constant. This variation in angular velocity can generate vibrations and additional stresses on the transmission system.

To minimize or eliminate angular velocity variations generated by simple cardan joints, the following solutions can be used:

▪**Use of Two Phase Cardan Joints:** Mount two simple cardan joints on the same shaft so that the angular velocity variations generated by the first joint are compensated by the second joint. To

work properly, the two joints must be phase-mounted, i.e. the forks in the middle of the shaft must be aligned.

- **Use of CV Joints:** CV joints are designed to transmit rotational motion with a constant angular velocity, regardless of the angle between the shafts. They are more complex and expensive than simple cardan joints, but offer superior performance in terms of vibration and noise.

Essentially, the intermediate drive shaft is a specialized component of the 4x4 drivetrain. Its operation is based on cardan joints that allow the efficient transmission of motor torque, compensating for the inherent angular variations. Compared to the main cardan shaft, the intermediate drive shaft is often shorter and can be subjected to different operating angles depending on the specific configuration of the vehicle. Both types of cardan shafts are essential for the proper functioning of the transmission system, but the intermediate shaft is distinguished by its specific role in all-wheel drive vehicles, making it easier to distribute power to both axles.

2. Flexible trees Figure 2.3.21:



Figure 2.3.21 Flexible shaft [6]

- Applications: Special applications where extreme flexibility and the ability to operate at wide angles is required.
- Structure: A flexible core, made of helical coiled wire layers, encased in a protective sheath.
- Features: Use in applications such as operating tools or equipment remotely, where precise alignment of components is not possible.

Components Associated with Drive Shafts

To ensure the correct and efficient operation of drive shafts, a number of associated components are required:

- Cardan joints (Cardan Crosses) Figure 2.3.22:
  - They allow momentum to be transmitted between shafts that are not aligned.
  - They are composed of a central cross and four arms, which connect to the shaft flanges.
  - Requires periodic lubrication to reduce friction and wear.



Figure 2.3.22 Cardan Cross

▪Intermediate Supports Figure 2.3.23:

- They reduce vibrations and prevent deformation of long shafts, especially in commercial vehicles.
- They are mounted on the body and support the drive shaft at intermediate points.
-



Figure 2.3.23 Shaft support

▪Coupling Flanges Figure 2.3.24:

- Connect the drive shafts to other transmission components, such as the gearbox, differential, or wheels.
- It provides a secure and rigid connection for transmitting the moment.



Figure 2.3.24 Coupling flange

Selecting the right materials is essential to ensure the optimal strength, durability and weight of the drive shafts:

Steel:

- Steel alloys with high torsion and fatigue strength are widely used for the manufacture of drive shafts.
- Heat treatments, such as hardening and tempering, can improve the mechanical properties of steel.

Aluminium:

- Used to reduce the weight of shafts, especially in applications where performance is important.
- High-strength aluminum alloys can provide a good combination of light weight and mechanical strength.

Composite Materials:

- Carbon fibers or other composite materials are used to achieve an optimal combination of strength and weight.
- Composite shafts can provide superior torsional rigidity and a significant reduction in vibration.

Drive Shaft Maintenance

Proper maintenance is essential to extend the life and ensure the reliable operation of drive shafts:

Joint check:

- Periodic inspection of the cardan and CV joints to detect signs of wear or damage.
- Proper lubrication of the joints to reduce friction and wear.
- Replacement of worn or damaged joints to prevent more serious problems.

Balancing the trees:

- Periodic balancing of shafts to minimize vibration and noise.
- Checking and correcting imbalances caused by wear, deformation or loss of balancing elements.

Visual Inspection:

- Look for signs of damage, such as cracks, deformations, corrosion or lubricant leaks.
- Check the condition of intermediate brackets and coupling flanges.

2.3.5 Final drive

In the vast and complex universe of automotive engineering, the transmission system stands out as a fundamental mechanism, precisely orchestrating the transfer of energy generated by the engine to the drive wheels, transforming raw power into controlled and efficient movement. Within this system, the final drive occupies a position of paramount importance, being not only the last building block, but also the key link that ensures that the engine's power characteristics are perfectly adapted to the specific requirements of the wheels. This adaptation is not only about transmitting force, but also about optimizing it, converting the high speed and relatively low torque of the engine into adequate speed and amplified torque, necessary to overcome rolling resistance, accelerate promptly, climb steep slopes and maintain a constant cruising speed. The final drive should not be perceived just as a simple power transfer channel, but as an intelligent converter, which shapes the characteristics of the mechanical energy to perfectly match the peculiarities of the wheels and the driving conditions. This transformation is essential to maximise the efficiency and performance of the vehicle, allowing the engine to run at optimum speeds, while the wheels receive the torque needed to generate efficient traction. Essentially, the final drive performs a number of interdependent functions, which contribute to transforming and optimizing engine power:

1. Speed Reduction: Internal combustion engines are designed to operate at relatively high revs to generate maximum power. However, the drive wheels need a much lower speed to maintain optimal contact with the running surface and avoid spinning. The final drive reduces the speed of the gearbox's output shaft, adapting it to the right values for the wheels, allowing the engine to run efficiently without compromising traction and stability.
2. Torque Amplification: Motor torque is the measure of the rotational force that the motor can generate. The higher the torque, the faster the vehicle can accelerate and climb steeper slopes. The final drive boosts torque, giving the wheels the power they need to overcome rolling resistance,

accelerate promptly and carry heavy loads. Torque amplification is directly related to speed reduction: the more the speed is reduced, the more torque is amplified.

3. Balanced Power Distribution: In the case of multi-wheel drive (all-wheel drive) vehicles, the final drive has the role of distributing power evenly to all wheels, ensuring optimal traction and increased stability. Proper power distribution prevents skidding and loss of control, allowing the vehicle to confidently tackle difficult terrain and adverse weather conditions.
4. Speed differentiation: During turns, the wheels on the inside of the turn travel a shorter distance than the wheels on the outside, which implies the need to rotate at different speeds. Some final drives include a differential, an ingenious mechanism that allows the wheels to rotate at different speeds, making it easier to handle and preventing spin.

The final drive can be implemented in a variety of configurations, depending on the vehicle type, drive system, and specific performance requirements. In the case of rear-wheel drive or all-wheel drive vehicles, the final drive is often integrated into the drive axle, forming a compact and efficient assembly. In contrast, in the case of front-wheel drive vehicles, the final drive can be a separate unit, connected directly to the wheels via short drive shafts. Regardless of the specific architecture, the final drive remains an indispensable element of the transmission system, ensuring that the engine's power is optimally used to propel the vehicle safely and with maximum performance.

2.3.6 Differential

In complex automotive engineering, the transmission system is a vital assembly, responsible for the efficient and controlled transfer of the power generated by the engine to the drive wheels. Among the many components that make up this system, the differential Figure 2.3.25 stands out as an essential element, with a specific and crucial role: that of allowing the drive wheels to rotate at different speeds during corners Figure 2.3.26. This seemingly simple capability has profound implications for the vehicle's handling, stability and durability, making the differential an indispensable component for the optimal functioning of any modern vehicle.

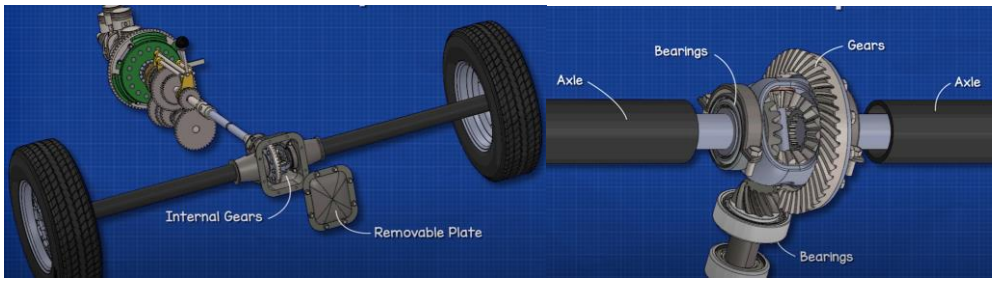

Figure 2.3.25 The differential

To understand the importance of the differential, it is essential to analyze the geometry of a vehicle's movement during a curve. When a vehicle steers, the wheels on the inside of the turn travel a shorter distance than the wheels on the outside Figure 2.3.26. This difference in distance implicitly implies a difference in rotational speed: the wheels on the inside must rotate slower than those on the outside to maintain optimal contact with the road surface. In the absence of a differential, the drive wheels would be forced to rotate at the same speed, regardless of the driving conditions.

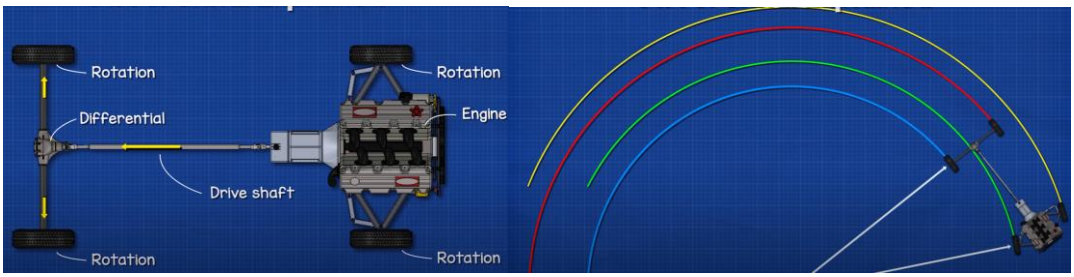

Figure 2.3.26 The importance of the differential

This constraint would generate a number of major problems:

- Wheel Spin: The wheel on the inside would be forced to spin because it would try to travel the same distance as the wheel on the outside, even if the actual distance is less. Slippage not only reduces the efficiency of power transmission, but also accelerates tire wear.
- Stressing Transmission Components: Forcing the wheels to rotate at the same speed would generate intense mechanical stresses on transmission components such as shafts, gears, and bearings. These stresses could lead to premature damage to these components and ultimately costly failures.
- Damage to handling: Wheel spin would significantly reduce control over the vehicle, making cornering more difficult and dangerous.

The differential solves the problem of differentiating wheel speeds through an ingenious mechanism that allows the distribution of engine torque between the two drive wheels, while allowing them to rotate at different speeds. The principle of operation is based on the use of a system of bevel gears, interconnected in a specific manner. Essentially, the differential is composed of the following main elements:

- Attack Pinion: Receives torque from the drive shaft and transmits it to the crown.
- Crown: A large gear, mounted perpendicular to the leading pinion, that receives torque and transmits it to satellites Figure 2.3.27.
-

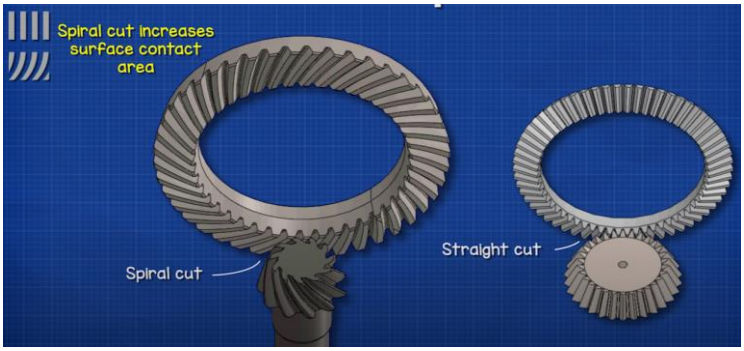

Figure 2.3.27 Differential sprocket and crown

- Satellites Figure 2.3.28: Bevel gears, mounted on a rotating support, which engage with planetary gears.
-

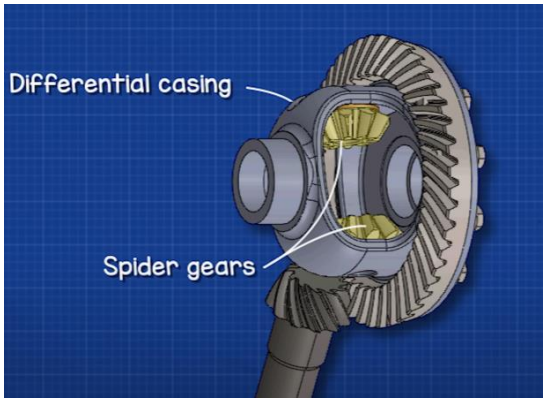

Figure 2.3.28 Spider gears

- Planetariums Figure 2.3.29: Bevel gears, connected to the half-shafts, that transmit torque to the wheels.

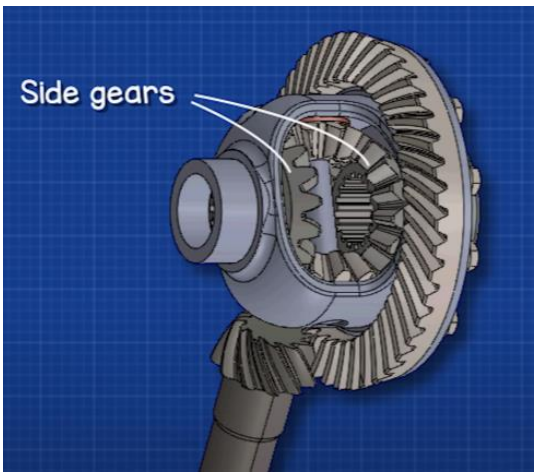

Figure 2.3.29 Side Gears

When the vehicle is moving in a straight line, the attack sprocket rotates the crown, which in turn rotates the satellite mount. In this situation, the satellites do not rotate around their own axes, but only move with the support, transmitting torque equally to the two planetaries and, implicitly, to the wheels. During a corner, however, the wheel on the inside of the corner tends to rotate slower than the wheel on the outside. This difference in speed causes the satellites to rotate around their own axes, allowing the planetaries to rotate at different speeds. The engine torque is thus differentially distributed to the wheels, compensating for the difference in speed and preventing slippage.

Adapting to specific requirements Over time, several types of differentials have been developed, each adapted to meet specific performance and control requirements. The most common types of differentials include:

- Open Differential: The simplest and most widespread type of differential, which allows maximum differentiation of wheel speeds. However, it has the disadvantage that if one wheel loses grip, all the power is transmitted to that wheel, leaving the other wheel without torque Figure 2.3.30.

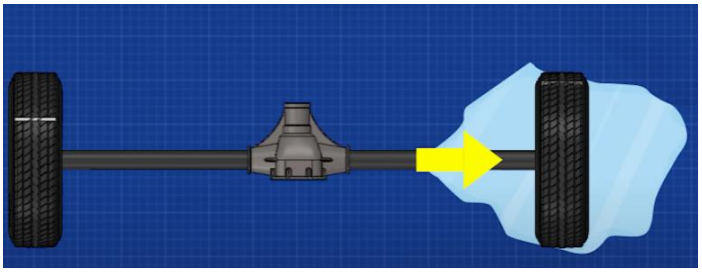

Figure 2.3.30 Torque transmitted to the wheel without grip

- Locking Differential: Allows the differential to be locked completely, turning the axle into a rigid one. Useful in off-road situations or on low-grip surfaces, but not recommended for use on high-grip surfaces.
- Limited Slip Differential (LSD) Figure 2.3.31: It offers a compromise between the open and lockable differential, allowing some differentiation of gears, but limiting the amount of torque that can be transmitted to a single wheel. There are several types of LSDs, such as mechanical (with discs or viscous coupling) and electronic.

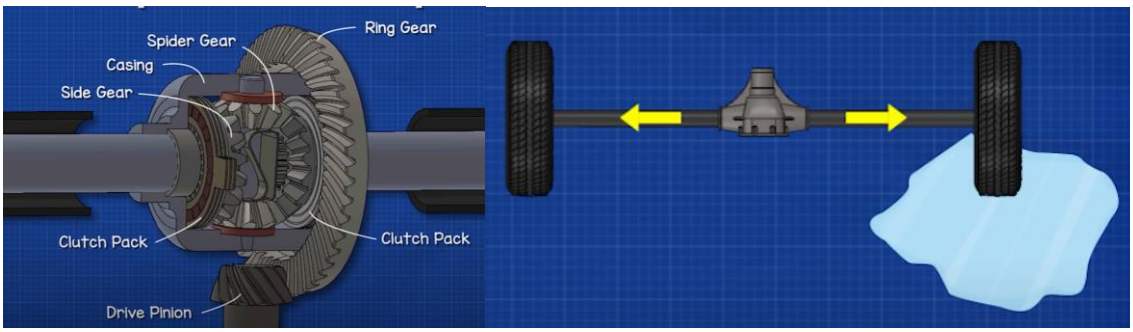

Figure 2.3.31 Limited slip differential

In conclusion, the differential is a fundamental component, ubiquitous in the architecture of the transmission systems of modern cars and heavy machinery. Regardless of the specific configuration of the drive axle – whether we are talking about front-wheel drive, rear-wheel drive or all-wheel drive – the differential remains an indispensable element for ensuring optimal handling, increased stability and reduced wear on tires and transmission components. The ingenuity of this mechanism lies in its ability to intelligently distribute engine torque between the drive wheels, allowing them to rotate at different speeds during corners and thus compensating for the differences in distance traveled. Technological evolution has led to the emergence of a wide range of differential types, from classic, open models to advanced electronically controlled locking systems, each of which is designed to meet specific performance and control requirements. However, regardless of its complexity, the fundamental role of the differential remains unchanged: to facilitate an efficient transmission of power to the wheels, while ensuring a safe and comfortable driving experience. Beyond its automotive applications, the differential has also proven its usefulness in the heavy machinery sector, where it is widely used in agricultural machinery, construction equipment and other specialized vehicles. In these contexts, the differential helps to optimise traction and improve the ability to travel on difficult terrain, allowing the machines to perform their tasks with maximum efficiency. Thus, the differential distinguishes itself as a central pillar of modern mechanical engineering, an intelligent and versatile system that continues to evolve to meet the increasingly complex requirements of the automotive industry and the heavy machinery and transport sector.

2.3.7 Half axis

Semi-shafts (half axis) Figure 2.3.32:

- Areas of application: Transmission of the moment from the differential to the drive wheels, both rigid axles and those with independent suspension.
- Structure: They can be rigid shafts, connected directly to the wheels, or flexible shafts, which include CV joints to allow movement of the suspension and steering.
- CV Joints: Essential for vehicles with independent suspension, these joints provide constant transmission of angular speed, regardless of the steering angle of the wheel. There are several types of CV joints, such as Rzeppa and Tripod joints, each with specific advantages in terms of maximum operating angle and ability to withstand high loads.



Figure 2.3.32 Half axis

2. CV Joints:
    - It ensures a constant rotational speed, regardless of the steering angle.
    - They are used in the shafts of vehicles with independent suspension.
    - There are different types, such as Rzeppa Figure 2.3.33 and Tripod Figure 2.3.334 each with specific characteristics.

The Rzeppa joint, a common type of CV joint, is an important component in the transmission systems of front-wheel drive (FWD) and all-wheel drive (AWD) vehicles, and is used to efficiently transmit torque to the wheels while allowing suspension and steering movements. Its characteristic structure, which includes a central ball and six smaller balls that move in specially created channels, ensures uniform power transmission even at angles of up to 45 degrees, providing reliable and relatively quiet operation. Although it does not compensate for shaft length variations as well as the tripod joint, the Rzeppa joint stands out for its simplicity and robustness of design, being widely used on the front axles of passenger cars and in other automotive applications. Proper maintenance, which involves regularly checking the protective bellows, lubricating them properly and replacing the joint in case of wear or suspicious noises, is crucial to maintain the performance and durability of this vital component of the transmission system.

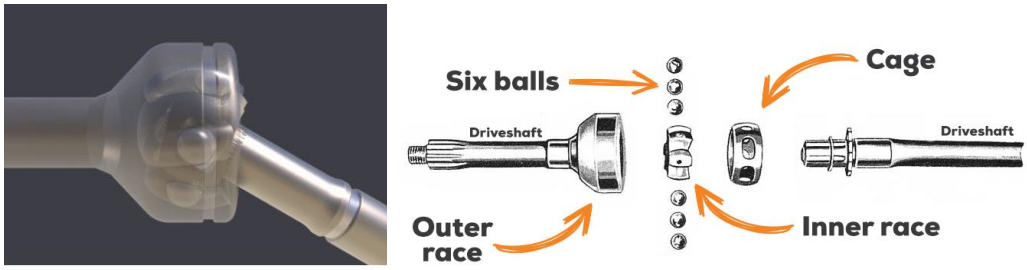

Figure 2.3.33 Rzeppa joint [7]

Tripod joint Figure 2.3.34 is a specialized type of CV joint frequently used in automotive transmission systems, especially front-wheel drive (FWD) and all-wheel drive (AWD), where it serves to efficiently transfer power from the engine to the wheels while allowing suspension and steering to move. Its distinctive design, based on a central tripod with three arms, each terminated with a roller or bearing, which moves through the channels of a bucket, provides a notable advantage in compensating for variations in the length of the shaft caused by suspension movements, ensuring smooth, quiet and efficient operation with minimal energy loss. Although sensitive to contamination in the event of damage to the protective bellows and has a limited operating angle compared to other types of CV joints, the tripod joint remains a popular choice due to its compactness and ability to minimize vibrations, and is widely used in independent suspension vehicles. Proper maintenance, consisting of checking the bellows, proper lubrication and timely replacement of the worn joint, is essential to ensure the reliability and longevity of this key component of the transmission system.

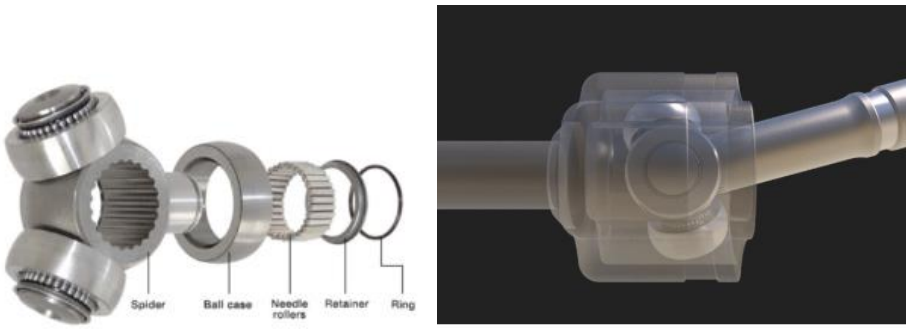

Figure 2.3.34 Articulation Tripod [7]

Bibliography

[1]“Carte Transmisii Ion Tabacu (Modif) | PDF.” Accessed: Feb. 03, 2025. [Online]. Available: https://www.scribd.com/document/336873763/Carte-Transmisii-Ion-Tabacu-Modif

[2]"Understanding Drive Shafts: Types, Materials, Design, and Manufacturing | AT-Machining," *https://at-machining.com/ro/*, Accessed: Feb. 06, 2025. [Online]. Available: https://at-machining.com/ro/transmission-shafts/

[3]"Three Shaft Gearbox - PDFCOFFEE.COM." Accessed: Feb. 06, 2025. [Online]. Available: https://pdfcoffee.com/cutie-de-viteze-cu-trei-arbori-pdf-free.html

[4]"What is Plantar Gear in Automatic Transmissions." Accessed: Feb. 06, 2025. [Online]. Available: https://www.transmisiiautomate.ro/intrebari-frecvente/ce-este-angrenajul-plantar-la-cutiile-automate/

[5]"What is the transfer case and how does it work? #82.” Accessed: Feb. 06, 2025. [Online]. Available: https://www.pieseauto.ro/cutie-de-transfer/ce-este-cutia-de-transfer-si--functioneaza-82.htm

[6]“Flexible Shaft Components.” Accessed: Feb. 06, 2025. [Online]. Available: https://www.suhner-components.com/en/offer/flexible-shaft-components/

[7]“Blog tripod vs. Rzeppa joint – KMP Drivetrain Solutions.” Accessed: Feb. 06, 2025. [Online]. Available: https://www.kmpdrivetrain.com/driveshafts/blog-tripod-vs-rzeppa-joint/?srsltid=AfmBOorRwnzi3JxiUlrT3sED3LVpdv91Mu0pajyC0ZnkPnXJ2EL8XKs4

2.4 Chassis, undercarriage

2.4.1 Frame

From a structural point of view, the chassis typology of road vehicles is influenced by their functional and performance requirements, thus adapting to the specific purpose of the vehicle. In the case of passenger cars and light vehicles, self-supporting construction is usually used, in which the body and chassis are integrated into a single structure. This solution allows for a significant reduction in the overall weight of the vehicle and improves aerodynamic efficiency and fuel consumption, thanks to the increased rigidity of the entire unit. In addition, the self-supporting design optimizes the manufacturing process, as it does not require an additional frame to support the vehicle's components, which contributes to reduced production costs and greater flexibility in the design and integration of components.



Figure 2.4.35 Self-supporting body [1]

On the other hand, for freight or passenger vehicles with a maximum authorized mass of more than 3500 kg, the use of a separate chassis is preferred. This configuration consists of an independent frame that supports the weight of the vehicle and its components, leaving the body to play a secondary role, protecting and comforting the occupants. The separate chassis allows for better adaptability to harsh operating conditions, such as transporting heavy loads or use in off-road environments. This structure also offers increased resistance to mechanical stress and vibrations, and the repairability of the vehicle is simpler, as the chassis components can be replaced or repaired independently of the body. These advantages make the separate chassis ideal for trucks, buses and other heavy commercial vehicles that require a robust and durable structure.



Figure 2.4.36 Vehicle chassis [1]

However, in the category of vans and off-road vehicles with a maximum authorized mass of up to 3500 kg, configurations with a separate chassis can also be found. These vehicles are designed to provide flexibility in use, with the ability to carry significant loads and drive over rough terrain without compromising safety and handling performance. Although these vehicles fall into the category of those with a lower overall weight, the use of a separate chassis gives them the advantage of increased resistance to

intense suspension stresses and a more stable behaviour in difficult driving conditions, especially in rough terrain conditions or when transporting heavy equipment. A special category of chassis is the tubular chassis. It consists of metal pipes or tubes (usually steel or aluminum alloy) to form the main structure of the vehicle. This configuration is especially used in motorsport competitions, due to its characteristics that represent an optimal stiffness-to-weight ratio. The tubular chassis is designed to withstand extreme stresses, being able to absorb large shocks, in a manner that protects the integrity of the vehicle and the driver in the specific conditions of sports competitions.



Figure 2.4.37 Tubular chassis

The main advantages of a tubular chassis are low weight and increased mechanical strength. Thanks to the use of tubes, the structure can be much lighter than a traditional chassis made of solid steel or other heavy materials, but without compromising the strength needed to cope with the high impacts and intense stresses characteristic of motorsport competitions. This type of chassis efficiently distributes the forces resulting from an impact throughout the vehicle's structure, which improves safety in the event of an accident at high speeds. Also, the modular design of the tubular chassis allows easy customization according to the requirements of the competition and the vehicle, making this solution extremely versatile for different competitions, from circuit racing to rallies or off-road competitions. However, the tubular chassis involves high production costs and a more complex manufacturing process. Its construction involves the precise welding and joining of metal tubes, which must have precise dimensions and tolerances to ensure the structural integrity of the vehicle. Also, the design and testing process is more expensive than with traditional chassis, as it requires a detailed analysis of the structural behavior and a rigorous check of each joint and weld. In addition, to ensure maximum performance, tubular chassis are often made of lightweight, high-performance materials, such as special aluminum alloys or high-strength steels, which can lead to increased production costs.

2.4.2 Bridges

In automotive construction, the axle is an essential component of the suspension and chassis system, having the role of supporting the weight of the vehicle, ensuring the connection between the wheels and distributing the forces resulting from acceleration, braking and cornering. This influences vehicle stability, passenger comfort and manoeuvrability on various types of surfaces. Depending on the suspension configuration and performance requirements, the axles can be rigid or independent, with each type having its own advantages and limitations.

Rigid axles, also known as solid axles Figure 2.4.38, are made up of a single structure that connects the two wheels on the same axis, keeping them at a fixed distance from each other. This configuration is frequently used in commercial vehicles, trucks and SUVs, due to its robustness and high load capacity. The advantages of rigid axles include simple construction, low production and maintenance costs, as well as superior resistance to mechanical stress. However, they also have disadvantages, such as increased rigidity, which reduces passenger comfort, and less performing dynamic behavior on uneven surfaces, as the movement of one wheel also directly influences the other wheel.

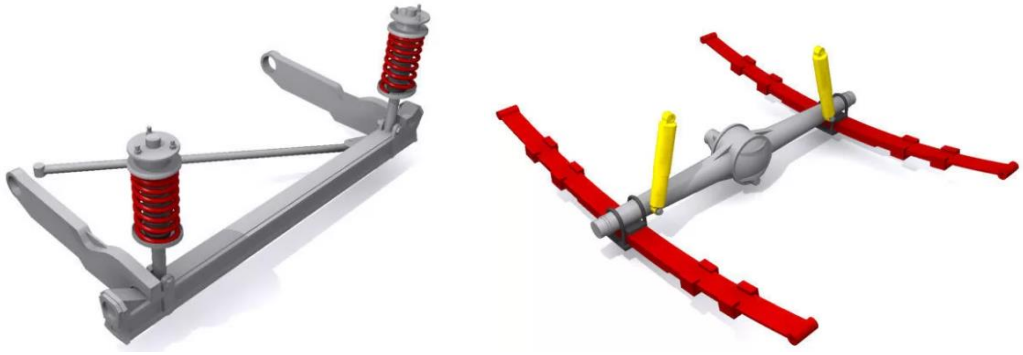

Figure 2.4.38 Fixed car axles [2]

On the other hand, independent axles allow each wheel to move separately without influencing the movement of the other wheel on the same axis. This configuration is preferred in modern passenger cars because it offers improved comfort, better traction, and superior handling. There are several types of independent suspensions, including the McPherson suspension Figure 2.4.39 b), appreciated for its simplicity and efficiency, the double wishbone suspension Figure 2.4.39 a), used in sports vehicles for steering precision and stability at high speeds, and multilink suspension Figure 2.4.39 c), which combines the advantages of several systems to provide an optimal balance between comfort and performance. However, independent suspensions are more complex and expensive, requiring more rigorous maintenance and precise geometry to maintain optimal vehicle performance.

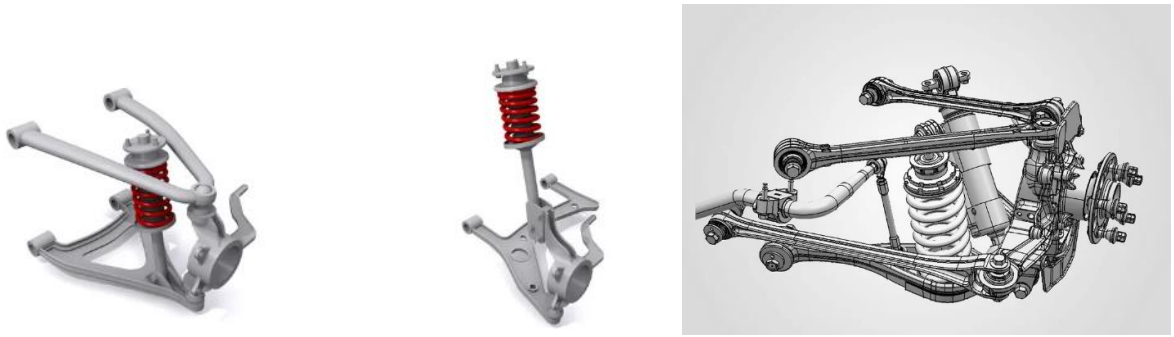

a) (b) (c)

Figure 2.4.39 Types of freestanding axles

Depending on the location, the axle can be front or rear, each having a specific role. The front axle integrates both the steering system and the suspension, which is essential for driving stability and precision. Most modern cars use an independent front axle to provide improved handling. The rear axle can be rigid or independent, depending on the type of vehicle and its use. In rear-wheel drive vehicles, the rigid axle is more common due to its advantages in terms of load distribution and durability.

The impact of axles on vehicle dynamics is significant, influencing aspects such as handling, stability, comfort and energy efficiency. Independent axles allow for more precise wheel control and reduce the transmission of shocks to the body, thus improving passenger comfort. Also, the use of lightweight materials in axle construction helps to reduce the weight of the vehicle, which leads to lower fuel consumption and increased energy efficiency. On the other hand, rigid axles offer better stability under high load conditions, being preferred for vehicles intended for the transport of goods or for those used in rough terrain.

2.4.3 Suspension

A car's suspension is an essential system that ensures that the wheels are in constant contact with the road surface, absorbing shocks and vibrations caused by bumps. Through this mechanism, the suspension contributes to passenger comfort, vehicle stability and handling, directly influencing its safety and performance. An efficient suspension allows for even distribution of the vehicle's weight and minimizes mass transfers during acceleration, braking, and cornering.

A car's suspension is made up of several essential components:

- Springs (coil, spring, torsion, pneumatic) – Support the weight of the vehicle and absorb shocks.
- Shock absorbers – Controls spring oscillations, preventing excessive body sway.
- Control Arms and Linkages – Connects the wheels to the chassis, allowing for controlled movement of the suspension.
- Stabilizer bar – Reduces body roll when cornering, improving lateral stability.

Depending on the configuration, suspensions can be classified into two main categories: dependent suspensions and independent suspensions.

Dependent suspension Figure 2.4.38.

In a dependent system, the wheels on the same axle are connected by a rigid axle, so the movement of one directly influences the other. This type of suspension is mainly used in commercial and off-road vehicles, due to its durability and high load capacity.

Advantages:

- Simplicity and low production costs.
- High durability and resistance to high loads.
- Easy maintenance.

Disadvantages:

- Low comfort on uneven surfaces.
- Low stability in corners and at high speeds.
- Weaker traction on off-road compared to independent suspension.

Independent suspension Figure 2.4.39.

In the case of independent suspension, each wheel moves separately, without influencing the other wheel on the same axle. This type of suspension is widely used in modern passenger cars because it provides superior comfort and better handling.

Types of independent suspensions:

- Suspensia McPherson Figure 2.4.39 b. McPherson suspension is one of the most widely used types of independent suspension, especially on the front axle of passenger cars. It was developed in the 1940s by engineer Earle S. McPherson and has become extremely popular due to its simplicity and efficiency. The main advantage of the McPherson suspension is space saving, which allows it to be used on compact vehicles and front-wheel drive models. In operation, when the wheel passes over a bump, the coil spring and shock absorber absorb the shock, maintaining the wheel's contact with the road surface. At the same time, the control arm and knuckle guide vertical movement, providing stability and directional control. McPherson suspension is widely used in production cars, especially front-wheel drive models, due to its excellent cost-effectiveness, and comfort ratio. McPherson suspension remains one of the most popular and efficient solutions for modern vehicles, offering an optimal balance between cost, comfort and performance. Although it is not the best performing choice for sports or luxury cars, it continues to be used due to its reliability and affordability. In the future, the evolution of active suspension materials and technologies could further improve this system, keeping it relevant in the automotive industry.
- Suspensia Double Wishbone Figure 2.4.39a). Double Wishbone suspension (also called overlapping link suspension) is an independent suspension system, especially used in performance vehicles, sports cars, and luxury automobiles. It is based on two triangular-shaped control arms, arranged one above the other, which provide precise control over wheel movement and an optimal balance between comfort and maneuverability. In operation, each arm controls the angles and movement of the wheel during compression and suspension relaxation. As the vehicle moves over bumps or corners, the Double Wishbone suspension minimizes changes in the angle of fall while maintaining optimal wheel contact with the road surface. Due to its superior performance, the Double Wishbone suspension is used especially in high-performance and premium vehicles. The Double Wishbone suspension is one of the best performing solutions for modern vehicles, offering an optimal balance between handling, comfort and stability. Although it has a higher cost and requires more space for installation, its advantages in terms of wheel control and cornering performance make it preferred by premium and sports car manufacturers. In the future, the integration of lightweight materials and active suspension technologies could further improve this system, keeping it relevant in the automotive industry. Compared to the McPherson suspension, the Double Wishbone allows for better control over the wheel's drop angle, which improves traction and cornering stability.

•Suspensia Multi-link Figure 2.4.39c)– Multi-link suspension is an advanced type of independent suspension, mainly used in premium vehicles, sports cars and modern SUVs. This system offers an excellent combination of comfort, stability and wheel control, thanks to the large number of independent arms that allow fine tuning of the suspension geometry. Compared to the McPherson or Double Wishbone suspension, the Multi-link suspension is more flexible in terms of adjustments, making it ideal for vehicles that need to combine precise handling with a high level of comfort. The Multi-link suspension consists of a set of 3 to 5 independent wishbones that control the movement of the wheel vertically, longitudinally and transversely. These arms are secured to the chassis by elastic or swivel joints, allowing for controlled movement. In operation, each arm of the Multi-link suspension controls a specific type of wheel movement, which minimizes changes in the angle of fall and allows optimal traction to be maintained in any road conditions. This significantly improves stability, especially at high speeds and when cornering. Multi-link suspension is mainly used in vehicles that require a combination of comfort, stability and superior performance. Multi-link suspension is one of the most advanced and efficient solutions for modern vehicles, offering exceptional stability, comfort and performance. Although its high cost and complexity make it less affordable for volume cars, it remains the standard in the automotive industry for premium and performance models.

•Air suspension Figure 2.4.40– The air suspension uses compressed air to support the vehicle and absorb shocks produced by bumps in the road. It provides much better control of vehicle height and comfort by adjusting the air pressure in pistons or air bags. Air suspension is typically used in luxury vehicles, trucks, buses, and vehicles that need an adaptable and comfortable suspension system. Advantages of air suspension. The air suspension absorbs shocks and vibrations from the road much more efficiently, which leads to greater comfort for passengers. This system is extremely effective in conditions where the vehicle encounters bumps or rough roads. One of the biggest advantages of air suspension is the ability to adjust the height of the vehicle. Depending on the vehicle's load, the suspension can be raised or lowered to improve stability and performance. Compressed air or pneumatic bags play a very important role in reducing vibrations and noises that are transmitted from the suspension to the vehicle body. The air suspension adjusts the height of the vehicle to improve stability. While driving, the height can be adjusted to respond to different road conditions or speed, which increases safety. Compared to metal springs, air suspension can reduce wear and tear on vehicle parts by distributing forces more evenly. Disadvantages of air suspension Air suspension is much more complex than traditional spring suspension and has higher manufacturing costs. System maintenance is also more expensive, as it may include replacing air bags, compressors, or sensors. In the event of an air leak or compressor failure, the air suspension system may become unusable or affect the vehicle's performance. Compared to conventional suspension, air suspension is heavier due to additional components such as the compressor and air tanks. The pneumatic system involves a number of components that need to work together, and this can make repairs more complex and expensive.



Figure 2.4.40 Pneumatic suspensie [3]

Intelligent and adaptive suspension

With technological advancement, modern suspensions have evolved into intelligent systems capable of automatically adapting to road conditions and driving style.

•Electronically Controlled Suspension – Uses sensors and actuators to automatically adjust the dampers based on vehicle speed and road surface.

•Active Suspension – Adjusts the force of the shock absorbers in real time to keep the body stable when cornering and braking.

•Magnetic Ride Control – Uses magnetorheological fluids in the shock absorbers to instantly change the characteristics of the suspension.

A well-calibrated suspension system contributes to the safety and efficiency of the vehicle by providing a balanced weight distribution and maintaining the contact of the wheels with the road. Soft suspensions provide more comfort but can reduce stability at high speeds, while stiffer suspensions improve handling but compromise comfort. Choosing the right suspension depends on the type of vehicle and its use.

2.4.4 Wheels

The rolling of motor vehicle wheels can occur due to the action:

- a pushing force applied to the wheel axle, such as undriven wheels from motor vehicles and the wheels of motor trailers;
- a moment of entrainment (motor moment);
- a braking moment applied to the wheels and a thrust force applied simultaneously to the axle, in the case of drive wheels and free (undriven) wheels.

In the case of rolling, the forces and moments applied to the wheel give rise to support (linking) forces in the area of contact with the track.

An elemental force dN, normal to the surface elemental, and a tangential force dT, acting as a frictional force, corresponding to the direction of travel in the case of drive wheels, or in the opposite direction in the case of a braked wheel or undriven (free) wheels, act on an element on the tread of the tyre in contact with the track, and a tangential force dT, acting as a frictional force, corresponding to the direction of travel in the case of drive wheels, or in the opposite direction in the case of a braked wheel or undriven (free) wheels. The taxiway supported stresses on the surface element, equal to and contrary to the elemental support forces (dN' and dT') Figure 2.4.41.

The vector summation of the elementary reactions dN gives a resultant reaction N=Zr , and of the tangential reactions (in the plane of the taxiway) T=Xr , applied at the same point, at the distance a of the vertical that passes through the center of the axle, due to the deformations of the tire.

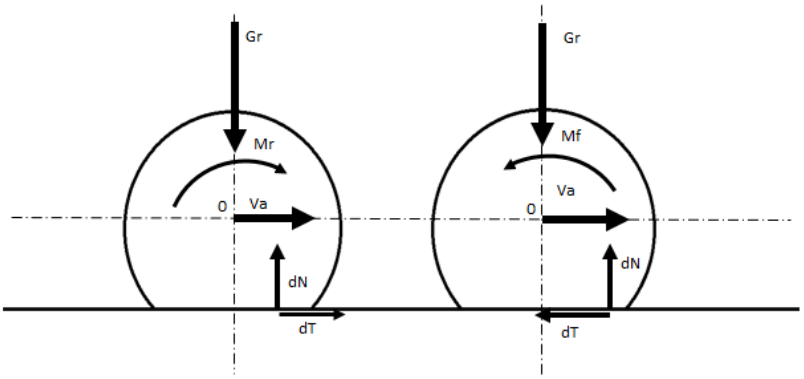

Figure 2.4.41 Forces acting on the tyre

1. UNTRAINED WHEELS (FREE) Figure 2.4.42.

Constant velocity $v_{a=constant,}$ $\omega_r = constant$ (uniform motion)

Equilibrium equations

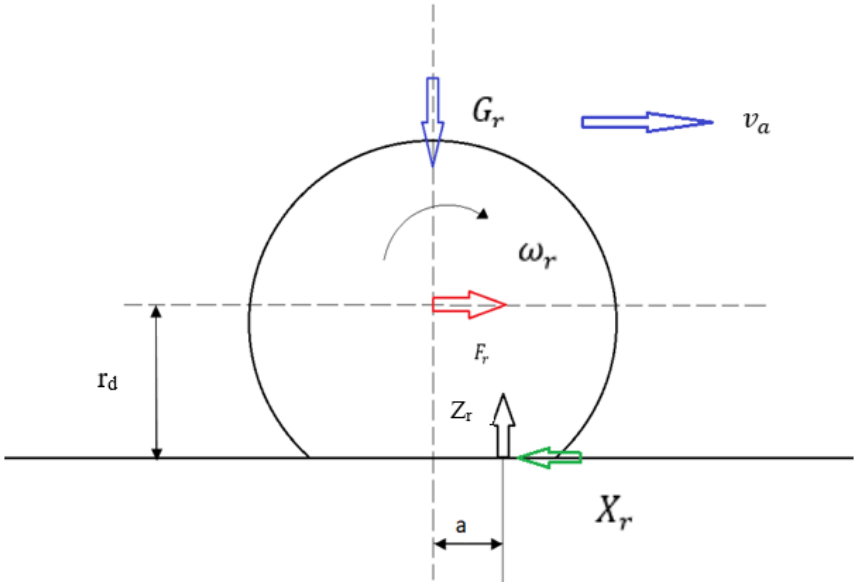

Figure 2.4.42 Forces acting on untrained wheels

Equilibrium equations:

$$\begin{cases} Fr - Xr = 0 \\ Xr - Gr = 0 \\ Z_r \cdot a - X_r \cdot r_d = 0 \end{cases} \quad (2.4.1)$$

$$X_r = F_r = Z_r \cdot \frac{a}{r_d} = f \cdot Z_r = f \cdot G_r = R_r \quad (2.4.2)$$

Uniform rolling condition.

$$\begin{cases} F_r \geq R_r \\ F_r \geq f \cdot G_r \\ f = \frac{a}{r_d} \end{cases} \quad (2.4.3)$$

f – rolling resistance coefficient.

G_r – wheel load force.

F_r - Wheel Force

Uneven movement (accelerated or decelerated) is taken into account inertial forces and the moment of inertia.

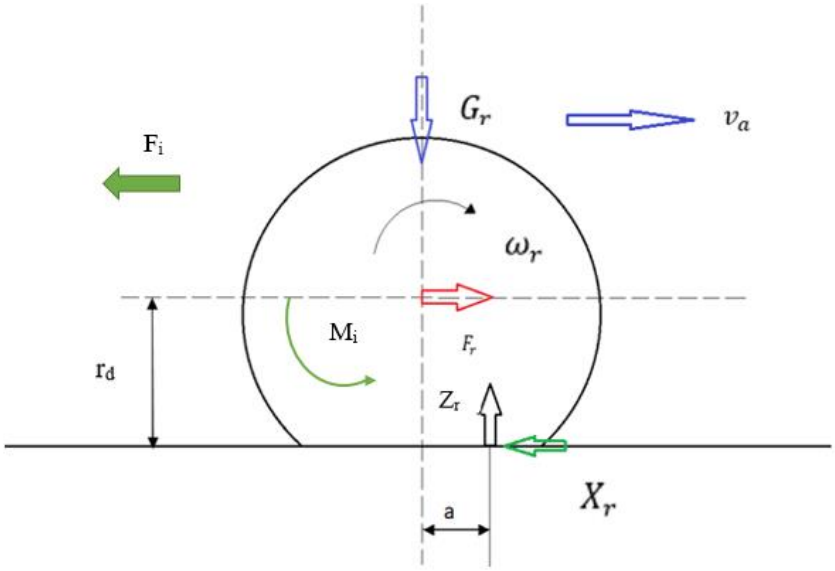

Figure 2.4.43 Moments and forces acting on the untrained wheel

$$F_i = -m_r \cdot \frac{d \cdot v_a}{dt} = -m_r \cdot r_r \cdot \frac{d \cdot \omega_r}{dt} \tag{2.4.4}$$

In the opposite direction (acceleration) of the speed will.

$$M_i = -I_r \cdot \frac{d \cdot \omega_r}{dt} \tag{2.4.5}$$

Dynamic equilibrium equations.

$$\begin{cases} F_r - X_r - m_p \cdot r_p \cdot \dfrac{d \cdot \omega_r}{dt} = 0 \\ Z_r - G_r = 0 \\ X_r \cdot r_d - Z_r \cdot a - I_r \cdot \dfrac{d \cdot \omega_r}{dt} = 0 \end{cases} \tag{2.4.6}$$

$$X_r = \frac{a}{r_d} \cdot Z_r + \frac{I_r}{r_d} \cdot \frac{d \cdot \omega_r}{dt} \tag{2.4.7}$$

$$F_r = \frac{a}{r_d} \cdot Z_r + \left(m_r \cdot r_r + \frac{I_r}{r_d}\right) \cdot \frac{d \cdot \omega_r}{dt} \tag{2.4.8}$$

$$F_r = \frac{a}{r_d} \cdot Z_r + \left(m_r + \frac{I_r}{r_d \cdot r_r}\right) \cdot \frac{d \cdot v_a}{dt} \tag{2.4.9}$$

R_r – rolling resistance of the wheel
R_i - resistance to acceleration of the wheel

$$R_r = \frac{a}{r_d} \cdot Z_r = f \cdot Z_r = f \cdot G_r \quad (2.4.10)$$

$$R_i = \left(m_r + \frac{I_r}{r_d \cdot r_r}\right) \cdot \frac{d \cdot v_a}{dt} \quad (2.4.11)$$

$$F_r = R_r + R_i$$

DRIVE WHEELS

The rolling of the wheel occurs due to the motor moment at the wheel Mr, and the reaction Xr opposes the slippage of the wheel Figure 44.

Uniform motion (va=constant, □r=constant)

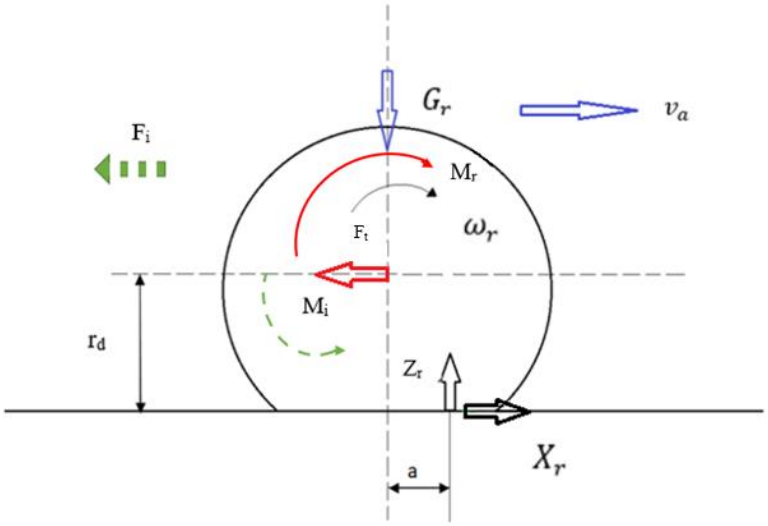

Figure 44 Drive wheels

$$\begin{cases} X_r - F_t = 0 \\ Z_r - G_r = 0 \\ M_r - X_r \cdot r_d - Z_r \cdot a = 0 \end{cases} \quad (2.4.12)$$

$$\Rightarrow M_r = X_r \cdot r_d + Z_r \cdot a = X_r \cdot r_d + G_r \cdot a$$

$$F_t = X_r = \frac{M_r}{r_d} - \frac{a}{r_d} \cdot G_r = \frac{M_r}{r_d} - f \cdot G_r = F_r - f \cdot G_r \quad (2.4.13)$$

$$F_t = F_r - f \cdot G_r \quad (2.4.14)$$

$$f \cdot G_r = f \cdot Z_r = R_r = Rolling\ Force \quad (2.4.15)$$

F_r - Rolling Force (Delivered)

F_t – tensile force

The drive moment Mr (motor moment to the wheel) varies between a single value determined by the rolling condition of the wheel and a maximum value at which the slippage begins.

The tangential reaction Xr reaches the maximum adhesion value when

in which . So, , $X_r = \varphi \cdot Z_r \varphi = \text{grip coeficient}\, X_r \in [0, f \cdot Z_r)$

$$M_{r\,min} = X_{R\,min} \cdot r_d + a \cdot G_r = a \cdot G_r$$
$$M_{r\,max} = X_{r\,max} \cdot r_d + a \cdot G_r = \varphi \cdot r_d \cdot G_r + a \cdot G_r = (\varphi \cdot r_d + a) \cdot G_r \quad (2.4.16)$$

M_r torque may vary

$$a \cdot G_r < M_r \leq (\varphi \cdot r_d + a) \cdot G_r$$

$$f = \frac{a}{r_d}$$

$$f \cdot r_d \cdot G_r < M_r \leq (\varphi \cdot r_d + f \cdot r_d) \cdot G_r \qquad (2.4.17)$$

$$f \cdot r_d \cdot G_r < M_r \leq r_d(\varphi + f) \cdot G_r$$

Accelerated movement.

$$\begin{cases} F_t - X_r + m_r \cdot r_r \cdot \dfrac{d \cdot \omega_r}{dt} = 0 \\ Z_r - G_r = 0 \\ X_r \cdot r_d + Z_r \cdot a - M_r + I_r \cdot \dfrac{d \cdot \omega_r}{dt} = 0 \end{cases}$$

$$X_r = \frac{M_r}{r_d} - \frac{a}{r_d} \cdot Z_r - \frac{I_r}{r_d} \cdot \frac{d \cdot \omega_r}{dt} \qquad (2.4.19)$$

$$F_t = \frac{M_r}{r_d} - \frac{a}{r_d} \cdot Z_r - \left(m_r \cdot r_r + \frac{I_r}{r_d}\right) \cdot \frac{d \cdot \omega_r}{dt} \qquad (2.4.20)$$

We define $F_r = \frac{M_r}{r_d}$ the engine torque at the wheel $F_{m_r} \equiv F_r$

Available wheel Force

$$F_t = F_r - (R_r + R_i) \qquad (2.4.21)$$

R_i - resistance given by inertia

F_t – the force that manifests itself in the wheel axle and causes the vehicle to push.

BRAKED WHEELS

The rolling is due to the thrust force F_r, but also to the braking moment M_f in the opposite direction to the direction of rotation. The tangential reaction X_r which opposes the wheel slipping on the track, has the opposite direction to the speed of the car Figure 2.4.45.

Uniform movement *va=constant* (when descending a slope and braking to maintain constant walking speed) .

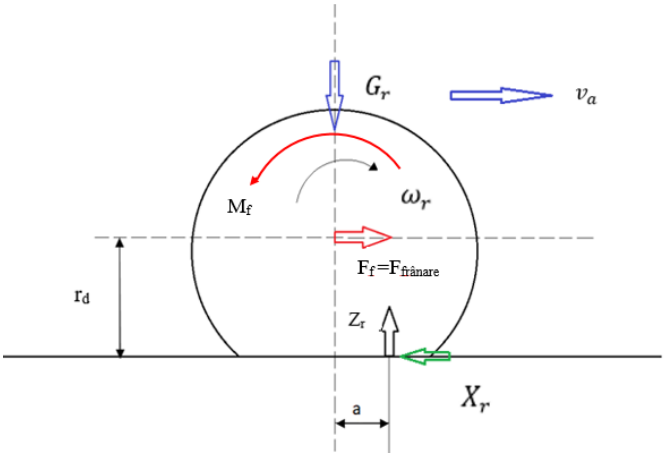

Figure 2.4.45 Braked wheels

$$\begin{cases} F_f - X_r = 0 \\ Z_r - G_r = 0 \\ M_f - X_r \cdot r_d + Z_r \cdot a = 0 \end{cases} \quad (2.4.22)$$

$$\Rightarrow M_f = X_r \cdot r_d - Z_r \cdot a$$

$$X_r = \frac{M_f}{r_d} + \frac{a}{r_d} \cdot Z_r \quad (2.4.23)$$

Braking force

$$F_f = X_r = \frac{M_f}{r_d} + R_r \quad (2.4.24)$$

the haying sheet at the wheel.

$$F_{fr} = \frac{M_f}{r_d} \quad (2.4.25)$$

Total braking force.

$$F_f = F_{fr} + R_r = X_r \quad (2.4.26)$$

X_r is limited by grip.

$$X_{max} = \varphi \cdot G_r$$
$$X_{min} = 0 \quad (2.4.27)$$

It follows that the haymaking force developed at the wheel by the braking moment, without locking the wheel, has the limited range of

$$-f \cdot G_r < F_{fr} \leq (\varphi - f) \cdot G_r \quad (2.4.28)$$

Braking moment

$$-a \cdot G_r < M_f \leq \varphi \cdot G_r \cdot r_d - a \cdot G_r$$

$$-a \cdot G_r \leq M_f \leq (\varphi \cdot r_d - a) \cdot G_r \quad (2.4.29)$$

The braked wheel has a decelerated movement.

$$\begin{cases} F_f - X_r + m_r \cdot r_r \cdot \dfrac{d \cdot \omega_r}{dt} = 0 \\ Z_r - G_r = 0 \\ Z_r \cdot a - X_r \cdot r_d + M_f - I_r \cdot \dfrac{d \cdot \omega_r}{dt} = 0 \end{cases} \quad (2.4.30)$$

$$X_r = \frac{a}{r_d} \cdot Z_r + \frac{M_f}{r_d} - \frac{I_r}{r_d} \cdot \frac{d \cdot \omega_r}{dt} \quad (2.4.31)$$

$$F_r \equiv F_f = \frac{a}{r_d} \cdot Z_r + \frac{M_f}{r_d} - \left(m_r \cdot r_r + \frac{I_r}{r_d}\right) \cdot \frac{d \cdot \omega_r}{dt} \quad (2.4.32)$$

$$F_r \equiv F_f = F_{fr} + R_r - R_i \quad (2.4.33)$$

F_f – the braking force with which the wheel acts through the axle on the vehicle.

Bibliography

[1]“Car Chassis Design | CNC & Sheet Metal Expertise - Zintilon.” Accessed: Feb. 14, 2025. [Online]. Available: https://www.zintilon.com/blog/automotive-car-chassis/

[2]“Tipurile de punti pe care le au masinile noastre. fb-comm #1394218437269153_1394457230578607.” Accessed: Feb. 14, 2025. [Online]. Available: https://www.4tuning.ro/ghidul-soferului/tipurile-de-punti-pe-care-le-au-masinile-noastre-33234.html?fb_comment_id=1394218437269153_1394457230578607

[3]“Cómo la suspensión neumática puede mejorar la autonomía de los eléctricos.” Accessed: Feb. 14, 2025. [Online]. Available: https://www.drivingeco.com/ro/suspension-neumatica/

2.5 Control Mechanism

The automobile, a complex creation of modern engineering, would be nothing more than an inert mass of metal without the ability to be controlled. It is the control mechanisms, mainly represented by the steering system and the braking system, that give the car agility, safety and the ability to respond promptly to the driver's intentions. These systems, working in harmony, allow not only to move from one point to another, but also to navigate precisely, avoid obstacles and stop safely in any road conditions. Essentially, the steering system converts steering wheel movements into steering wheel orientation, allowing the driver to choose the desired trajectory. From simple, mechanical to modern, electronically assisted systems, the steering system has constantly evolved to provide more precise control, reduced driver effort and increased stability. The braking system, on the other hand, is responsible for reducing the vehicle's speed or coming to a complete stop, converting kinetic energy into frictional heat. From traditional drum brakes, to high-performance disc brakes and advanced anti-lock braking systems (ABS), the braking system has undergone a remarkable evolution, becoming a crucial element for the active safety of the car. This chapter will explore in detail the components, operating principles and evolution of steering and braking systems, highlighting the crucial role they play in vehicle safety, comfort and performance. We will also look at current and future trends in the development of these systems, such as electric power steering, automatic emergency braking, and integration with driver assistance systems.

2.5.1 Steering

The steering system is a fundamental component of any vehicle, having the essential role of allowing the driver to control the vehicle's trajectory by orienting the steering wheels. Going beyond the simple function of changing direction, the steering system significantly influences the handling, stability and safety of the car, making it a crucial element of the interaction between driver and vehicle. Throughout the history of the automobile, the steering system has constantly evolved, from simple mechanisms, based solely on the driver's physical strength, to complex systems, hydraulically or electrically assisted, integrated with sensors and electronic control units, which optimize performance and reduce the effort required.

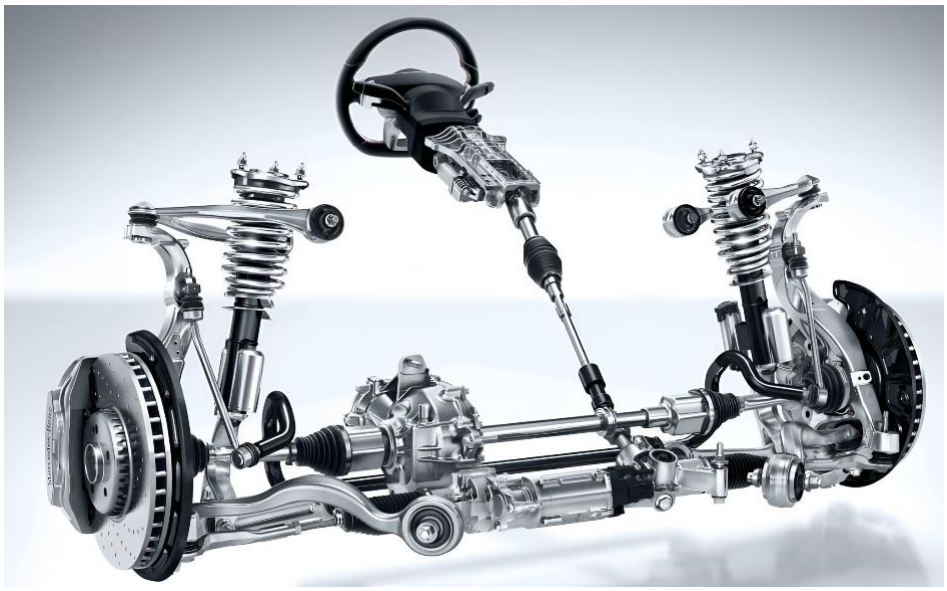

Figure 2.5.46 Steering system

In its most basic form, the steering system is composed of a series of interconnected components, which transform the movement of the steering wheel into the orientation of the steering wheels. These components include:

1.Steering wheel: The main interface between the driver and the steering system, allowing the application of force and steering control.

2.Steering Column: A shaft that transmits the rotary movement of the steering wheel to the steering mechanism. The steering column is often designed with safety features, such as deformable sections, that absorb energy in the event of a frontal impact.

3.Steering Mechanism: The central component that amplifies the force applied by the driver and converts it into the linear motion required to drive the steering rods. The most common types of steering mechanisms include worm wheel and geared mechanisms, screw and recirculating nut mechanisms, and rack and pinion mechanisms.

4.Steering Linkages: Metal bars that connect the steering mechanism to the wheel knuckles. The steering rods transmit the force from the steering mechanism to the wheels, determining their orientation.

5.Wheel Knuckles: Components that support the wheels and allow them to pivot around a vertical axis, allowing them to change direction.

6.Steering Geometry: Represents the set of angles and distances that define the position of the wheels in relation to the body and to the longitudinal axis of the vehicle. The steering geometry significantly influences the handling, stability and wear of the tyres. Important angles of steering geometry include drop angle, trailing angle, and toe/divergence angle.

Evolution of Steering Systems: Over time, steering systems have evolved significantly, thanks to technological advances and increasing demands for comfort, safety and performance. The first automobiles used purely mechanical steering systems, which required considerable physical effort from the driver, especially at low speeds or difficult maneuvers. To reduce the effort required, power steering systems have been introduced, which use hydraulic or electric force to amplify the force applied by the driver. Hydraulically assisted steering systems use a hydraulic pump, driven by the engine, to generate hydraulic pressure, which assists the movement of the steering mechanism. Electrically assisted steering systems use an electric motor to assist the movement of the steering mechanism, providing more precise control and superior energy efficiency. The latest developments in steering systems include integration with sensors and electronic control units, which allow the implementation of advanced functions such as:

- Active Steering: Automatically adjusts the steering gear ratio based on vehicle speed and road conditions, providing increased handling at low speeds and improved stability at high speeds.
- Lane Keeping Assist: Uses sensors to detect the vehicle's position relative to lane markings and applies subtle steering corrections to keep the vehicle on the correct trajectory.
- Automatic Parking: Uses sophisticated sensors and algorithms to park the vehicle automatically, without driver intervention.

The steering system directly influences the dynamics of the vehicle, affecting handling, stability and safety. A well-designed and properly tuned steering system provides precise control, prompt reaction and a natural steering feel, allowing the driver to confidently approach corners, avoid obstacles and maintain control of the vehicle in emergency situations. Steering geometry plays a crucial role in vehicle dynamics. Drop, run, and toe/break angles influence tire grip, directional stability, and tire wear. The correct adjustment of these angles is essential to achieve optimal performance and a long tyre life. In conclusion, the steering system is a vital component of the car, which has constantly evolved to provide more precise control, reduced driver effort and increased safety. From simple, mechanical to modern, electronically assisted systems, the steering system continues to be an active area of research and development, with the aim of improving the driving experience and increasing safety on public roads.

The steering systems of motor vehicles can be classified according to various criteria, reflecting the differences in construction, functionality and technology.

A systematic classification of these systems provides a comprehensive perspective on the diversity of engineering solutions adopted and facilitates the understanding of the advantages and disadvantages of each approach.1. By Turning Mode:

- Mechanical Systems: It uses only mechanical links (bars, connecting rods, joints) to transmit the movement from the steering wheel to the steering wheels. They are simple and robust systems, but they require considerable physical effort from the driver.
- Assisted Systems: Uses an additional system (hydraulic, electric, or electro-hydraulic) to amplify the force applied by the driver, reducing the effort required for turning.
- Hydraulic Systems: Uses a motor-driven hydraulic pump to generate hydraulic pressure, which assists the movement of the steering mechanism.
- Electrical Systems: Uses an electric motor to assist the movement of the steering mechanism. They can be electrically assisted on the column (ECAS - Electric Column Assist Steering) or electrically assisted on the rack (EPAS - Electric Power Assist Steering).
- Electro-Hydraulic Assist (EHA) Systems: Uses a hydraulic pump driven by an electric motor, combining the advantages of hydraulic and electric systems.

2. By Direction Colony Position:

•Left-Hand Drive Systems: The steering column is located on the left side of the vehicle (according to the standards of most countries).

•Right Hand Drive Systems: The steering column is located on the right side of the vehicle (used in countries such as the UK, Japan, Australia).

•Central Steering Wheel Systems: The steering column is centrally located (less common, used in some competition or utility vehicles).

3. By Location of the Steering Wheels:

•Front Axle Steering Systems: The steering wheels are located on the front axle (the most common configuration).

•Rear Axle Steering Systems: The steering wheels are located on the rear axle (used to improve handling at low speeds or to compensate for the effects of oversteer at high speeds).

•Both Axle Steering Systems (All-Wheel Steering): The steering wheels are located on both the front and rear axles (offering superior handling, increased stability and a reduced turning circle).

4. By Deck Type:

•Rigid Axle Systems: Used especially in commercial or off-road vehicles, where the front axle is rigid. The steering mechanism is connected to a steering rod, which drives both wheels simultaneously.

•Independent Axle Systems: Used in most modern cars, where the front wheels have independent suspension. The steering mechanism is connected to each wheel via separate steering rods, allowing independent movement of the wheels.

5. According to the Law of Variation of the Transmission Ratio:

•Constant Gear Ratio Systems: The ratio of steering wheel rotation angle to wheel steering angle remains constant.

•Variable Gear Ratio Systems: The ratio of steering wheel rotation angle to wheel steering angle varies depending on the steering angle or vehicle speed. These systems offer increased manoeuvrability at low speeds and improved stability at high speeds.

6. By the Mode of Producing the Turning Force:

•Direct Drive Systems: The force applied by the driver to the steering wheel is transmitted directly to the steering wheels, possibly amplified by an assistance system.

•Indirect Drive Systems (Steer-by-Wire): There is no direct mechanical connection between the steering wheel and the steering wheels. Sensors monitor the position of the steering wheel and transmit the information to an electronic control unit, which drives electric motors to orient the wheels. These systems offer maximum flexibility in terms of adjusting steering characteristics and allow for the implementation of advanced driver assistance functions.

The classic steering system, found in a wide range of vehicles, is a fundamental and reliable engineering solution for trajectory control. Based on simple but effective mechanical principles, this system transforms the rotary movement of the steering wheel into the orientation of the steering wheels, allowing the driver to navigate with precision and maintain control of the vehicle. A detailed understanding of the operation of this system is essential for diagnosing and remedying any faults, as well as for assessing the evolution towards modern, electronically assisted steering systems. To understand how the classic steering system achieves steering control, it is necessary to analyze its main components and how they interact:

1.The steering wheel: It is the primary interface between the driver and the steering system. By turning the steering wheel, the driver applies the necessary force to steer the steering wheels. The steering wheel is ergonomically designed for easy grip and control.

2.Steering Column: It is a metal shaft that connects the steering wheel with the steering mechanism. The steering column transmits the rotational movement of the steering wheel to the steering mechanism, but also has the role of absorbing part of the energy of a possible frontal impact, thus protecting the driver. The deformable sections of the steering column compress in the event of an impact, reducing the risk of injury.

3.Steering Mechanism: It is the central component of the steering system, having the role of amplifying the force applied by the driver and transforming it into linear motion, necessary to operate the steering rods. There are several types of steering mechanisms used in classic systems, each with specific advantages and disadvantages:

•Rack and pinion mechanism Figure 2.5.47: It is the most widespread type of steering mechanism in modern cars. A rack, a toothed bar, engages a pinion, connected to the steering

column. The rotation of the steering wheel causes the sprocket to rotate, which moves the rack sideways, directly actuating the steering rods. This mechanism provides precise steering and a direct feel of the road.

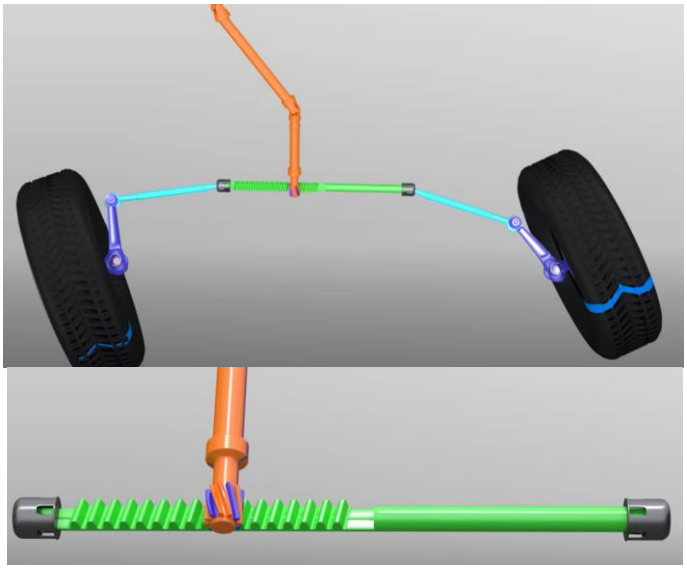

Figure 2.5.47 Rack and pinion mechanism

4.Pitman Arm Figure 2.5.48:It is a lever connected to the steering mechanism, which converts the rotary or linear movement of the mechanism into lateral movement, necessary to operate the steering rods.



Figure 2.5.48 Pitman arm

5.Steering Linkages Figure 2.5.49:They are metal bars that connect the Pitman arm to the wheel joints. The steering rods transmit the force from the steering mechanism to the wheels, determining their orientation. The steering rod system usually includes a center linkage (or connecting rod), side rods, and ball joints, which allow for relative movement of suspension components.

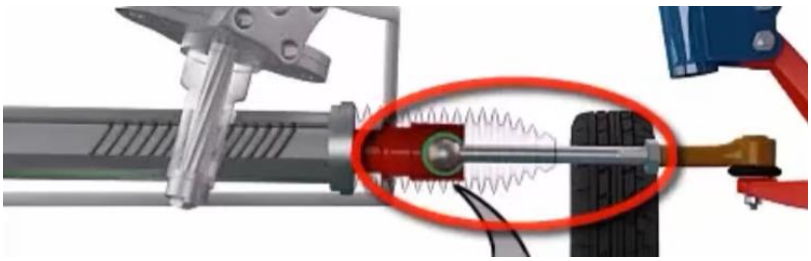

Figure 2.5.49 Tie rod

6.Wheel Knuckles Figure 2.5.50: They are the components that support the wheels and allow them to pivot around a vertical (or almost vertical) axis, allowing them to change direction. The wheel knuckles are connected to the steering rods via ball joints.



Figure 2.5.50 Wheel Knuckles

7.Ball joints Figure 2.5.51: They allow flexible movement between steering and suspension system components, compensating for angle variations caused by suspension movements and ensuring efficient power transmission.

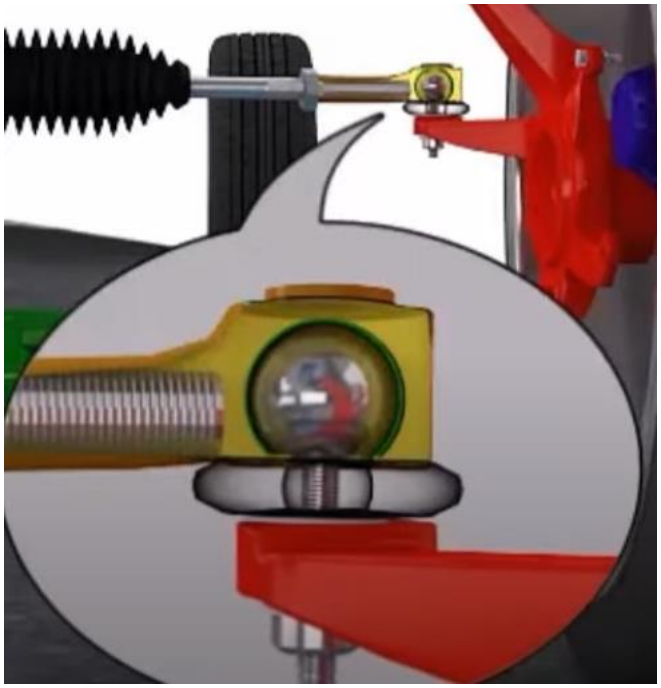

Figure 2.5.51 Ball joints

Working Principle:

1.Driver Action: The driver applies a force to the steering wheel, rotating it in the desired direction.

2.Motion Transmission: The rotary movement of the steering wheel is transmitted through the steering column to the steering mechanism.

3.Force Amplification and Transformation: The steering mechanism amplifies the force applied by the driver and converts it into linear motion (in the case of rack or bolt and recirculating nut mechanisms) or rotary motion (in the case of worm wheel and gear mechanisms).

4.Steering Linkage Actuation: The movement of the steering mechanism is transmitted to the steering rods via the Pitman arm (in the case of worm wheel and toothed or screw and recirculating nut mechanisms) or directly (in the case of rack and pinion mechanisms).

5.Wheel Orientation: The steering rods push or pull on the wheel knuckles, causing them to pivot around their axis and orient the wheels in the desired direction.

6.Trajectory Control: By orienting the steering wheels, the driver controls the vehicle's trajectory, navigating the road and avoiding obstacles.

Steering geometry, represented by the angles and distances that define the position of the wheels relative to the body and to the longitudinal axis of the vehicle, plays a crucial role in the stability, handling and wear of the tyres. The main angles of steering geometry include:

- Fall Angle: The angle between the vertical plane and the plane of the wheel, seen from the front. A correctly adjusted drop angle ensures even tire wear and optimal stability.
- Vanishing Angle: The angle between the pivot axis (the imaginary line that joins the pivot points of the spindle) and the vertical line, viewed from the side. The departure angle influences directional stability and the effort required for turning.
- Toe/Divergence Angle: The difference between the distance between the front edges of the wheels and the distance between the rear edges of the wheels. The angle of toe/divergence influences the direction of travel of the vehicle and the wear of the tires.

Proper steering geometry tuning is essential to achieve optimal performance and a long tyre life.

Power steering, regardless of the type of assistance used, has the role of reducing the physical effort required to turn the steering wheel, making it easier to maneuver the vehicle, especially at low speeds or during parking. Two of the most widespread power steering technologies are electrically assisted and hydraulically assisted. Although they both serve the same purpose, they operate on different principles and have specific advantages and disadvantages.

Hydraulically assisted power steering Figure 2.5.52.

- Working Principle: The hydraulically assisted power steering system uses a hydraulic pump, driven by the motor through a belt, to generate hydraulic pressure. This pressure is applied to a piston inside the steering box, assisting the movement of the steering mechanism. When the driver turns the steering wheel, a rotary valve directs the hydraulic fluid to the correct side of the piston, amplifying the force applied by the driver and making it easier to steer.
- Main Component:
  - Hydraulic Pump
  - Hydraulic Fluid Tank
  - Hydraulic hoses and pipes
  - Hydraulic piston steering box
  - Drive Belt
  - Rotary Valve
- Advantages:
  - Natural Steering Feel: Many drivers appreciate the direct, connected feel of hydraulically assisted power steering systems.
  - Reliability: Hydraulically assisted power steering systems are relatively simple and reliable, with a long history of use in the automotive industry.
  - High Assistance Capability: They can provide a high level of assistance, making them suitable for heavy vehicles or vehicles with wide tires.
- Disadvantages:
  - Power Consumption: The hydraulic pump runs steadily, even when no assistance is needed, consuming energy and reducing fuel efficiency.
  - Environmental impact: Hydraulically assisted power steering systems use hydraulic fluid, which can be harmful to the environment in the event of a leak.

•Complexity: The hydraulic system involves numerous components (pump, hoses, tank), which increases complexity and maintenance costs.

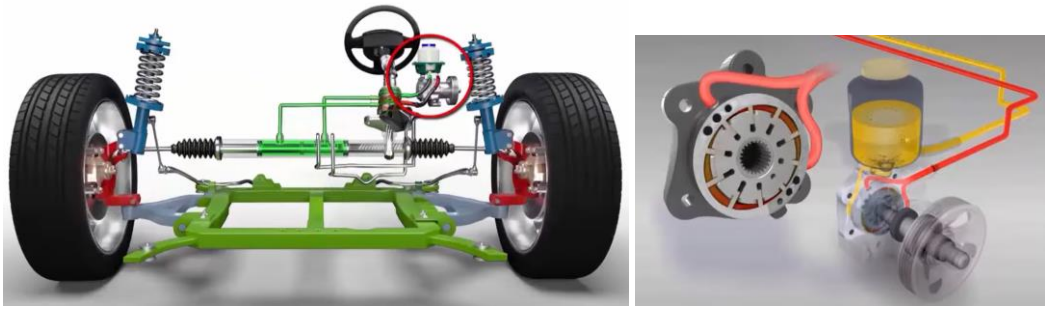

Figure 2.5.52 Hydraulic power steering system

Electric power steering

•Working Principle: The electric power steering system uses an electric motor to assist the movement of the steering mechanism. An electronic control unit monitors steering wheel position, vehicle speed and other parameters, and commands the electric motor to apply the necessary force to facilitate turning. There are two main types of electric power steering systems:

•Column Support Figure 2.5.53: The electric motor is located on the steering column and directly assists its movement.

•Rack and pinion assistance: The electric motor is located on the steering box and directly assists the movement of the rack.

•Main Component:

•Motor electric

•Sensors (steering wheel position, vehicle speed)

•Electronic control unit

•Reducer (to amplify the torque of the electric motor)

•Advantages:

•Energy Efficiency: The electric motor only works when assistance is needed, reducing energy consumption and improving fuel efficiency (or range, in the case of electric vehicles).

•Adaptability: The electric power steering system can be programmed to provide different levels of assistance depending on the vehicle's speed and driver preferences.

•Integration with Advanced Systems: The electric power steering system easily integrates with advanced driver assistance systems, such as lane keeping assist and automatic parking.

•Reduced environmental impact: It does not use hydraulic fluid, eliminating the risk of leakage and pollution.

•Disadvantages:

•Artificial Steering Feel: Some drivers may find the steering feel more artificial and less connected to the road than with hydraulically assisted power steering systems.

•Higher Upfront Costs: Electric power steering systems can be more expensive than hydraulic power steering, due to the complexity of the electronics.

•Reliability: Although modern electrically assisted power steering systems are reliable, the electronic complexity can increase the risk of failures.



Figure 2.5.53 Electric power steering system

2.5.2 Brake systems

The braking system plays an essential role in ensuring the safety of the car, allowing you to quickly reduce speed, brake effectively on slopes and maintain parking even on roads with maximum inclination. A vehicle's speed and acceleration performance can only be safely exploited if the braking system is able to respond promptly and efficiently. A high-performance braking system increases average travel speeds and improves the vehicle's operating indices. What's more, superior braking qualities can prevent accidents, even at low speeds, in the event of an unexpected obstacle. Automotive braking systems are constantly evolving, aiming to improve safety and optimize the trade-off between comfort, performance, cost and weight. The main features pursued in the development of braking systems are:

- Comfort: Driving pleasure, low effort, optimal travel and accuracy of brake control, absence of noise and vibrations.
- Real performance: Minimum stopping distance, high thermal endurance, stability and ability to maintain trajectory during braking.
- Low Costs and Maintainability: Minimal initial and maintenance costs, reduced system weight, optimized vehicle size (reduction of consumption by reducing mass, control of residual braking force, reduction of technical volumes).

Meeting these requirements, together with advances in electronics, are influencing the evolution of braking systems. The braking system of a motor vehicle consists of two main components: the service brake (applied with the foot), which allows speed control and a complete stop regardless of the conditions, and the safety (or emergency) brake, which intervenes in the event of a failure of the service brake and must be able to be operated without taking your hands off the steering wheel. The presence of the safety brake is mandatory to ensure traffic safety.

Braking is carried out by friction, using Figure 2.5.54:

- disc brakes on the front axle [A];
- disc or drum brakes on the rear axle [B].

These brakes are hydraulically operated, and a system with mechanical control and locking is used for stationary immobilization. The required hydraulic pressure is generated by the emitting cylinder, amplified by a system:

- pneumatic force amplifier [C] powered by the natural vacuum of the motor or by a vacuum pump. There are also hydraulic stress amplifiers, controlled by a generator or by a high-pressure accumulator.

The main cylinder has a plunger piston that separates the hydraulic circuits in two, to independently control parts of the system.

Additional components include:

- hydraulic brake corrector, controlled by the rear axle, between the transmitter cylinder and the rear axle brakes to constrain the slip of the rear wheels to remain less than the slip of the front wheels [D];
- adjustment block and ABS wheel speed sensors, allowing the pressure in the wheel brakes to be limited, where the tendency to lock up is noticeable [E].

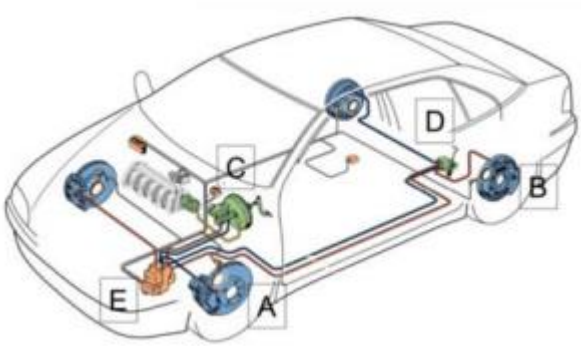

Figure 2.5.54 ABS system of a car

Disc brakes are preferred for modern vehicles, due to their ability to effectively stop vehicles with increasing weight and superior performance, adapting to increased safety requirements. Universally used in

automobiles, disc brakes stand out for their stability and capacity for thermal absorption and efficient cooling. The discs, made of cast iron, are ventilated on the front axle and sized to withstand temperatures of 600-700°C under severe braking conditions, such as alpine descents or acceleration-braking sequences (AMS test). The brake sizing takes into account the stopping distance obtained at the last braking in a chain of ten emergency braking. The friction elements used have friction levels that significantly decrease above 300°C, which is why the aim is to limit temperatures by increasing the thermal capacity of the discs, occupying all the available space inside the wheels. In addition to thermal properties, a homogeneous distribution of pressure and wear, high caliper rigidity, low clearance between the disc and the pads, the ability of the pads to neutralize disc defects, low residual torque and quiet operation are pursued. These advances are the result of the optimization of the design of discs, friction elements and calipers, without major innovations, except for reinforced aluminum alloy discs, which are not used industrially due to cost and functional limitations. Noise and vibration control remains a priority, but it is difficult to predict by calculation, as the methods of analysis and treatment are mainly experimental and require tests on the vehicle. The disadvantages of disc brakes include lower effectiveness, higher thermal stresses, and difficulties in performing the parking brake function. However, disc brakes are considered superior to drum brakes due to their operation at higher temperatures and rapid heat dissipation, and they do not have springs to move the brake pads away. Brake disc Figure 2.5.55, fixed to the hub (rotor), rotates in solidarity with it and is made, in most cases, of a single piece of gray cast iron, a wear-resistant material. For high-performance vehicles, bi-material discs are used, with an aluminium or steel hub and a ceramic carbon brake track (crown), assembled by screws or rivets. Ventilated brake discs improve the efficiency of the braking system by means of a gap with ventilation slots between the two brake layers. These slots generate an airflow while driving, cooling the braking surfaces inside and maintaining the effectiveness of the brakes for a longer period.



Figure 2.5.55 Brake Disc

Axial shoes, or brake pads Figure 2.5.56, are made up of a rigid metal plate on which a gasket made of composite materials resistant to high temperatures and pressures is fixed. Due to the small contact area, the seal is subjected to high pressures (dynamic stresses are 20 times higher than with a drum brake) and significant thermal loads. The lining is the main wear element of the braking system, having a shorter change frequency than the disc. An effective brake pad must possess superior thermo-mechanical properties and a stable coefficient of friction depending on the temperature, ensuring the most constant braking possible. The rigidity of the metal support must be high (in case of low seal stiffness) to transmit the force of the hydraulic piston and evenly distribute the pressure on the seal surface. This uniform distribution ensures uniform seal wear, constant braking over time and optimal heat flow distribution.



Figure 2.5.56 Brake pads

Brake caliper Figure 2.5.57 It is a component of the disc brake system, converting hydraulic pressure into mechanical force to apply the brake pads to the disc and slow or stop the vehicle. It houses the pads, applies braking force and allows them to be released when braking is not required. There are fixed calipers (with pistons on both sides of the disc), mobile calipers (with a single piston pushing the stirrup) and "punch" calipers (a variant of the mobile ones, frequently used). Its components include the casing, pistons, pads, gaskets, pins, and aerator. Calipers can be made of cast iron, aluminum, or steel, and their maintenance is essential, involving checking, cleaning, lubricating, and replacing the seals, as well as venting the system to ensure proper operation and safety of the braking system.



Figure 2.5.57 Brake caliper

Drum brakes Figure 2.5.58 They were widely used for over half a century, until the advent of disc brakes, and remain common on the rear axles of economy vehicles. In these brakes, the rotating part is a cylindrical drum, and the shoes are radially driven on the inner cylindrical surface of the drum. This type of brake is mounted inside the rim, protecting the surface from water and mud friction. Although drum brakes have limited thermal performance, especially due to reduced hot brake absorption due to drum expansion, they offer an economic advantage and are still used on the rear axle of small vehicles. The drum is fixed to the wheel by means of the hub flange, and the shoes and components that generate the downforce are mounted on the brake plate, fixed to the spindle holder. Coil springs hold the clogs in place, preventing them from touching the drum when the brakes are not applied. When the brakes are applied, hydraulic pressure

pushes the pistons, which press the clogs against the drum wall, slowing down the wheels. When the brakes are released, the springs pull the clogs back, releasing the drum.

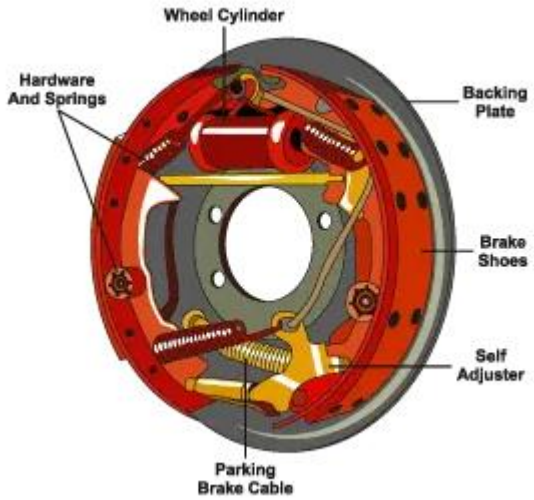

Figure 2.5.58 Drum brakes

Brake fluid has the essential role of transmitting brake pressure to the components of the braking system at the wheels. Modern brake fluids contain special additives for lubrication and corrosion protection, extending the service life and ensuring the safe operation of the system. An important aspect is the hygroscopicity of the brake fluid, i.e. the absorption of water from the atmosphere. During braking, the fluid heats up strongly, and the absorbed water can generate gas bubbles above the boiling point. These bubbles reduce braking pressure, decreasing efficiency and creating a real danger, and can even lead to complete system failure. The essential conditions for an effective brake fluid are:

- Low viscosity with minimal variations in the temperature range -50°C to +70°C.
- Anti-corrosion properties, protecting metal parts and compatibility with gaskets.
- Stability at high temperatures, without a tendency to stratify.
- Long-term property retention.
- Good lubrication properties.
- Boiling point as high as possible.

To meet these requirements, brake fluids are mixtures of solvents (alcohols, acetone, ether) and lubricating substances (castor oil, glycerin). Depending on the materials of the gaskets, liquids based on mineral oils can be used. The composition of brake fluids may vary, including castor oil solutions in ethyl or butyl alcohol, mixtures of ethyl alcohol, water and glycerin, mineral or synthetic oil-based products, or glycol-based combinations.

Brake master cylinder, or main cylinder Figure 2.5.59, is a key component of the hydraulic braking system, converting the force from the brake pedal into hydraulic pressure, which is then distributed to the wheels to operate the brakes. Its functions include generating and distributing pressure, maintaining residual pressure, and compensating for pad wear. The main components are the housing, pistons (often two for separate circuits), return springs, buckets, fluid tank, compensation valves, and fittings. There are single-circuit pumps (older, risk of total loss of braking), double-circuit (modern, increased safety through separate circuits) and assisted (for brake boosters). Operation involves operating the pedal, generating pressure, transmitting to the wheels, and applying the brakes, followed by releasing the pressure when lifting the foot off the pedal. Maintenance involves checking the fluid level, detecting leaks, replacing the fluid periodically and checking the operation. Common failures include leakage, piston blockage, valve failure, and loss of pressure. Therefore, a functional and well-maintained brake master cylinder is vital for vehicle safety.



Figure 2.5.59 Brake Pump

Servofrâna Figure 2.5.60: The system uses an external force to reduce the effort required when braking, providing comfort and even braking on each wheel. There are two main types of servo mechanisms used:

- Vacuum servomechanism: Uses the energy of the vacuum created in the intake manifold of the spark-ignition engine or by an engine-driven vacuum pump, and is used in particular in vehicles with a maximum permissible mass of less than 3.5 tonnes.
- Pneumatic servo mechanism: It uses the energy of compressed air, delivered by a compressor driven by the car engine, and is usually used in vehicles with a maximum permissible mass of over 3.5 tons.

The operating principle of the braking system is based on the transmission of the actuating force. When the driver presses the brake pedal, the central pump transmits this force through a closed circuit to the brake pistons in the caliper. Brake fluid, a hydraulic fluid, fills the pipes from the pump to the caliper, so that a small force exerted on the pedal is amplified and transferred to the wheels. The calipers actuate the brake pads, which adhere to the surface of the brake disc, resulting in the deceleration of the vehicle.

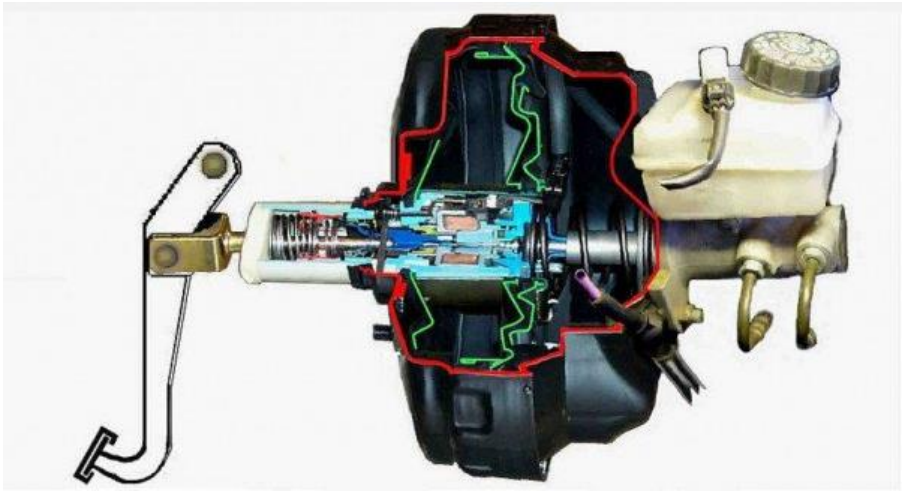

Figure 2.5.60 Brake booster mechanism

ABS system Figure 2.5.61 (Anti-lock Braking System) is a component of modern car safety systems, with the role of preventing wheel locks during emergency braking or on surfaces with poor grip. Through its intelligent intervention, ABS significantly improves the driver's ability to maintain directional control of the vehicle and, in many situations, helps to reduce braking distance, especially on slippery roads. Due to its

undeniable benefits, the ABS system has become a mandatory standard feature on most vehicles produced since the 90s, marking an important advance in road safety.

Key components of a typical ABS system include:

- Central Electronic Unit (ECU): This functions as the brain of the system, continuously monitoring the rotational speed of each wheel and analyzing the incoming data to detect potential blockages. Based on this information, the ECU coordinates the action of the other components to optimise the braking process.
- Wheel Speed Sensors: Each wheel is equipped with a sensor that constantly measures the rotational speed and transmits this information to the ECU. The sensors are able to detect subtle variations in speed and calculate the deceleration or acceleration of the wheel, providing essential data for the correct operation of the system.
- Hydraulic Valves: These precise and fast components are used to individually adjust the braking pressure applied to each wheel. By quickly opening and closing the valves, the ABS system can increase, maintain or reduce braking pressure, adapting to grip conditions and preventing wheel locking.
- Hydraulic Motor (Return Pump): When it is necessary to reduce braking pressure, the hydraulic motor intervenes to pump brake fluid back into the circuit, thus allowing the wheel to turn again and the driver to maintain control of the steering.

The principle of operation of the ABS system can be described in the following steps:

1. Constant Monitoring: Speed sensors at the wheel level continuously monitor the rotational speed of each wheel, providing real-time data to the ECU.
2. Jam Detection: When the sensors detect a sudden drop in the speed of a wheel, indicating a possible jam, the information is immediately transmitted to the ECU.
3. ECU intervention: The Central Electronic Unit interprets the received signal and, if the risk of blockage is confirmed, sends a signal to the hydraulic motor to begin the process of releasing the brake pressure.
4. Brake Pressure Modulation: Brake pressure is quickly reduced via hydraulic valves, allowing the wheel to rotate again and ensuring that the driver can continue to control the direction of the vehicle. This process of releasing and reapplying brake pressure occurs several times per second, providing precise and effective control over braking.

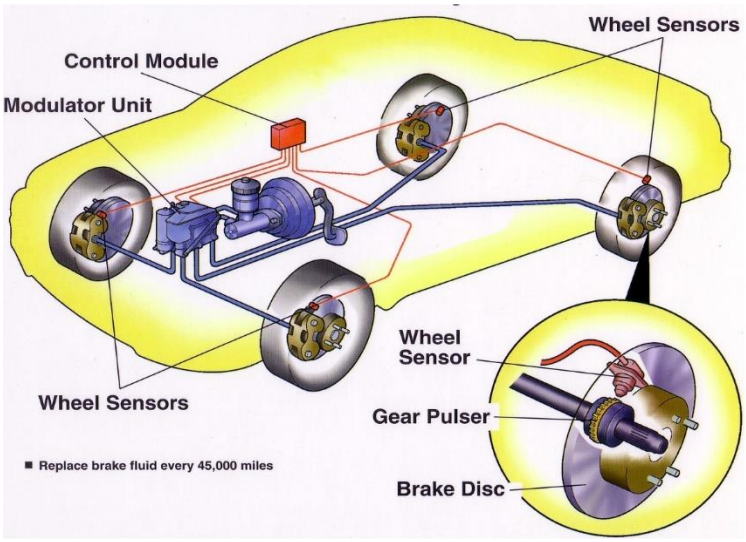

Figure 2.5.61 Composition of the ABS system

European suppliers of ABS systems Figure 2.5.62 They propose a standardized hydraulic architecture, based on two solenoid valves per wheel and a discharge pump. Although the costs remain significant (about 50% of the price of the entire braking system), ABS systems have reduced their weight and dimensions in recent years (from 6 to 3 kg), and their contribution to vehicle safety is undeniable. The ABS system uses individual speed sensors Figure 2.5.62 At each wheel, monitored by a microprocessor to detect rotation variations. Hydraulic control valves prevent skidding during sudden braking or on slippery surfaces. The availability of ABS has increased significantly, from around 25% of new vehicles in 1990 to over 90% today. When the brakes are applied, the ABS control module compares wheel speeds. If a wheel tends to stall

(resulting in loss of control), the system reduces the pressure in the corresponding braking circuit via the valves. The pressure can be released momentarily and then reapplied, allowing the wheel to regain grip and preventing skidding. This cycle repeats until grip is restored or the vehicle stops. Over time, the mechanical and electronic components of the ABS system can fail. ABS sensors are often affected by external factors such as dirt, heat or humidity. When the ECU detects erroneous data from a sensor, it memorizes the error and activates a warning light in the dashboard, disabling ABS until the problem is fixed.

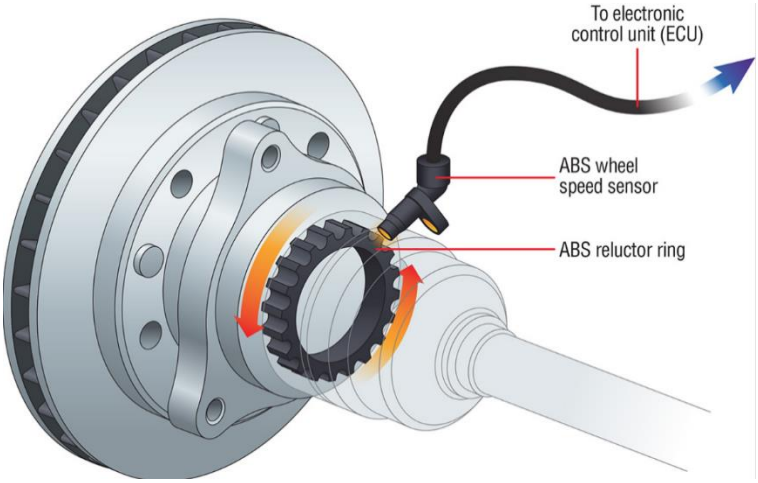

Figure 2.5.62 ABS sensor

The ABS system is often integrated with the traction control system (ASR) and the lane keeping system (ESC) to enhance vehicle control and stability. ABS prevents wheel lock-up when braking, ASR limits wheel spin when accelerating, and ESC helps maintain the desired trajectory in critical situations. ESC compares the desired trajectory with the real one and corrects the differences, acting on wheel braking and/or engine power. These systems work in coordination, using wheel speed sensors and an electronic control unit (ECU) that analyzes the data and activates the ABS, ASR and ESC functions to ensure the vehicle's stability in various driving conditions.

2.6 Air Conditioning and Heating Systems

Nowadays, car heating and ventilation systems are not just limited to temperature regulation. They play a key role in:

- Passenger safety: Ensures an optimal environment for a safe journey.
- Reduced driver fatigue: A suitable climate keeps the driver alert and focused.
- Clear visibility: Prevents fogging of the windows, ensuring optimal vision.
- Overall comfort: Contributes to a pleasant experience while traveling.

A constant flow of fresh air into the cabin reduces carbon dioxide levels, removes particulate matter and prevents the build-up of unpleasant odours. High concentrations of CO_2 can negatively affect the driver's reactions, which is why modern ventilation systems are designed to replace the air inside several times an hour, taking into account the number of passengers and the interior volume of the car. In some countries, the performance of air conditioning systems is regulated by law. The combination of heating, ventilation, and air conditioning provides precise temperature control, which is a challenge given the extreme climate variations around the world. Often, additional systems are required to provide additional heating or cooling, ensuring comfort regardless of the weather conditions.

Heat, an indestructible form of energy, is harnessed into the car heating system to create a comfortable environment inside the vehicle. The heater basically raises the temperature of the air, whether fresh from the outside or recirculated from the inside. This hot air is then strategically directed through pipes to various areas of the machine. There are several types of heaters, from those that use the heat generated by the engine, to electric variants. Most cars rely on heat produced by the engine, transferred to either water or air, depending on the type of cooling system.

Cooling and heat transfer systems

- Air cooling: In the case of air-cooled engines, a special sewer system directs heat from the engine surface or lubrication system directly into the passenger compartment.

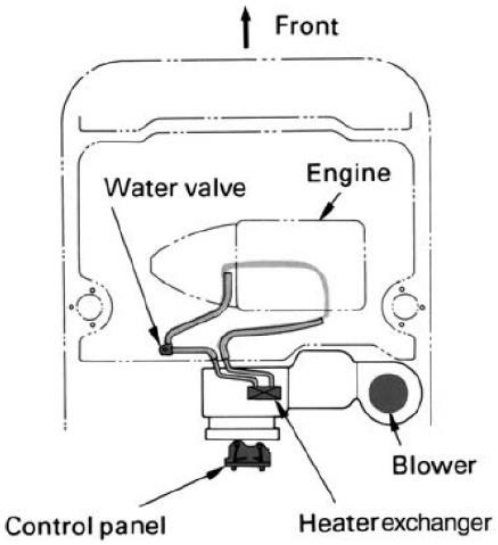

Figure 2.6.63 Water cooling

- Water cooling Figure 2.6.63:Water-cooled engines use a coolant that absorbs the heat generated by the engine and transports it to a heat exchanger.

Heat exchanger Figure 2.6.64:

The heat exchanger, located inside the machine, is designed with a large surface area to allow air to circulate efficiently over its fins. The air, either fresh or recirculated, is forced to pass over this exchanger, where it heats up and is then distributed to the passenger compartment through the ventilation system. Constructed of aluminum alloy tubes and fins, with aluminum or plastic tanks at the inlet and outlet, the heat exchanger is a key element in the heating process.

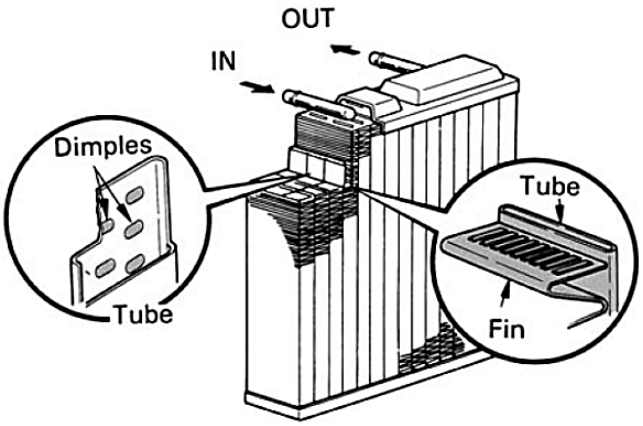

Figure 2.6.64 Heat exchanger

Temperature control:

Passengers can adjust the interior temperature via the control panel. It regulates the flow of water or air passing through or over the heat exchanger. There are two main methods of adjustment:

1.Water flow regulation: Controls the amount of coolant that passes through the heat exchanger.

2.Air Mixture Adjustment: Controls the proportion of hot and cold air that is mixed before it is distributed to the cabin.

Regulating the water flow:

This method of temperature regulation controls the amount of coolant flowing from the engine to the heater Figure 2.6.65, using a control valve. This valve adjusts the flow of coolant through the heater, thus changing its temperature. However, the regulation of the water flow can sometimes be less precise than passengers would like, as it is influenced by the speed and power of the engine. The system does not react instantly to the desired temperature changes. For example, if a lower temperature is desired, the valve will reduce the flow of coolant to the heater, and it will need time to cool down to the selected temperature, introducing a delay (thermal inertia). An advantage of this method is that it allows the entire airflow to pass through the heater, optimizing the overall performance of the heating system.

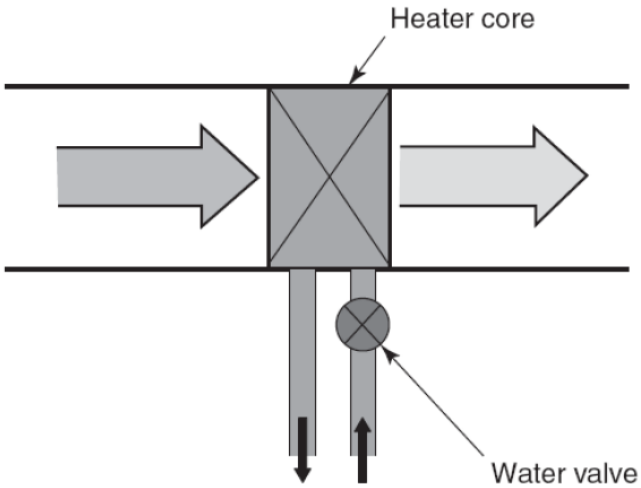

Figure 2.6.65 Regulating system on the water circuit

Air mixture regulation system Figure 2.6.66. It is an essential mechanism for controlling the temperature in the passenger compartment. It uses a smart flap, strategically placed at the entrance to the heating system, to manage the airflow to the heat exchanger. The flap directs air either directly over the heater or bypassing it completely, depending on the occupants' preferred settings. Users can adjust the desired temperature, and the system will adjust the proportion of air passing through the heater, ensuring optimal thermal comfort. The hot and cold air are then mixed in a specially designed chamber, resulting in the desired final temperature before being distributed to the passenger compartment.

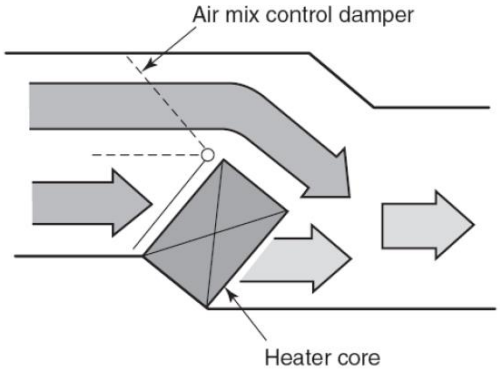

Figure 2.6.66 Air mixture regulation system

Control Technologies: Modern adjustment flaps are operated by various advanced mechanisms, including:

- Precise Bowden Cables
- Efficient vacuum system
- Fast and reliable servo mechanisms

Advantages and Disadvantages: A potential disadvantage is the size of the mixing chamber, which can make the heating system more voluminous compared to alternatives that directly regulate the flow of cooling water. However, the system offers a quick response to temperature changes and precise control of fluctuations, ensuring superior comfort. To counteract the heater's residual thermal radiation, modern systems may include an electromagnetic shut-off flap, which blocks the flow of coolant when cold air is desired.

Intelligent Cabin Air Distribution

Efficient air distribution inside the vehicle is crucial for passenger comfort. In general, there are two main approaches:

1.Natural Ventilation: Based on the air pressure generated by the movement of the vehicle.

2.Forced Ventilation: Uses fans (blowers) to control airflow.

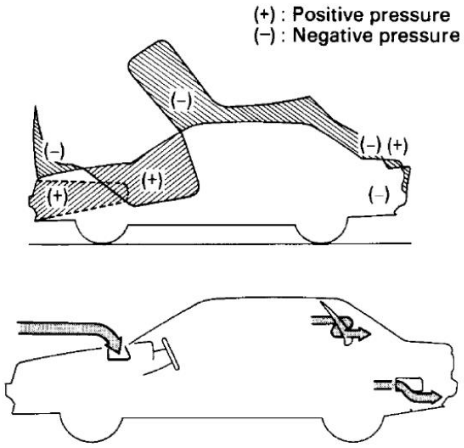

Figure 2.6.67 Areas with positive and negative pressure on the surface of a vehicle while driving

Natural ventilation exploits the aerodynamic pressure differences created around the moving vehicle Figure 2.6.67. Strategically placed inlets in the positive pressure zones allow air to enter the cabin, while exhaust vents in the negative pressure zones facilitate the removal of stale air. Although simple, natural ventilation has limitations:

- Dependence on the tightness of the engine compartment to prevent the entry of unpleasant odors.
- Variation of airflow depending on the speed of the vehicle, with the potential for excessive noise and strong currents at high speeds.

Modern forced ventilation systems use powerful and quiet fans to ensure a constant and controlled flow of air into the cabin, regardless of the vehicle's speed. Well-positioned outlets Figure 2.6.68, often integrated into the body pillars or behind the bumper, optimize air circulation and maintain a fresh and

comfortable interior environment. This approach allows precise control of the direction and intensity of the airflow, giving passengers the opportunity to customize the climate around them.

Modern air intake systems are designed to ensure clean and fresh air in the passenger compartment. Strategically positioned inlets collect outside air, which is then filtered through an advanced system consisting of a sieve and a high-efficiency pollen filter. The pollen filter is able to trap even the finest particles such as dust, pollen and other allergens, ensuring clean and healthy air for occupants. This technology is essential for people with allergies or respiratory sensitivities. Photocatalytic filters are a state-of-the-art technology for purifying the air in vehicles. They not only filter, but also actively destroy polluting gases and harmful microorganisms that enter the passenger compartment. In less than 5 minutes, the air inside your car can be completely purified. Key advantages of photocatalytic filters:

1.Continuous Protection: Provides constant protection against external and internal pollutants, while eliminating unpleasant odors.

2.Allergy relief: They destroy the microorganisms that trigger allergies, providing a healthier environment for sensitive people.

3.Extended Lifespan: Significantly extends the period of use of the filters, up to 2000 hours – the equivalent of approximately 5 years of average vehicle use.

4.Total Destruction of Pollutants: Unlike traditional carbon filters, photocatalytic filters completely destroy pollutants, not just temporarily retain them.

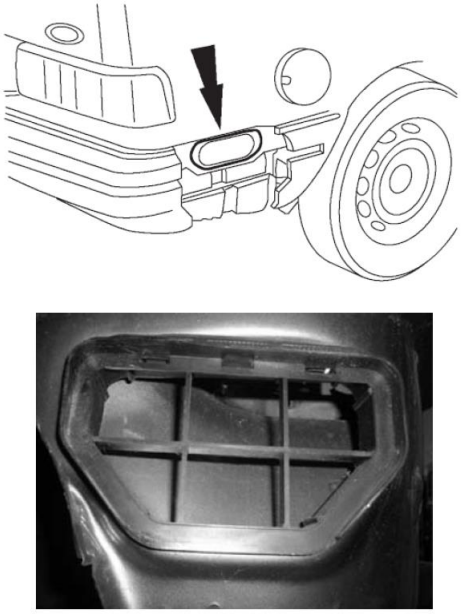

Figure 2.6.68 Stale air outlets

The stale air exhaust system is just as important as the intake system. The exhausts are equipped with flexible rubber flaps, discreetly located behind the rear bumper or under trim panels on the rear pillar Figure 2.6.68. The air pressure in the passenger compartment, generated by the fan and the natural airflow, opens the flaps, allowing the stale air to escape. When the ventilation system is not active, the flaps close automatically to prevent exhaust gases or other unpleasant odors from entering. Poor ventilation may indicate a problem with flap mobility. It is important to regularly check their operation to ensure optimal air circulation. If an exhaust gas smell is detected in the passenger compartment, check the tightness of the flaps and air vents.

Modern forced ventilation systems use a high-performance electric fan to ensure a constant and controlled flow of air into the cabin. These systems are essential in low-speed conditions or when comfort requirements are high, such as rapid defogging, efficient heating or intensive cooling.



Figure 2.6.69 Centrifugal fan

The fan forces air circulation over the heater or cooler, allowing heat or cold to be efficiently transferred to the air distributed in the cabin. Intake and exhaust vents are often integrated in the same locations as in natural ventilation systems, ensuring even air distribution and optimal comfort for all passengers.

Air Distribution Unit Figure 2.6.70, the heart of the car air conditioning system, is located under the dashboard and integrates pipes, mixing/directing valves, the blower, the heater and the evaporator (in air-conditioned vehicles). The filtered outside air is sucked in by the blower and directed to the air distributor, where the dampers regulate the temperature by mixing hot and cold air. The air is then distributed through the exhaust vents. The system can operate with fresh air from the outside or recirculated air from the inside. Recirculation eliminates odors and improves cooling, but prolonged use increases humidity, leading to fogging of the windows; switching to fresh air with air conditioning reduces humidity. Modern systems can include humidity sensors and intelligent control to automatically optimize the operating mode.

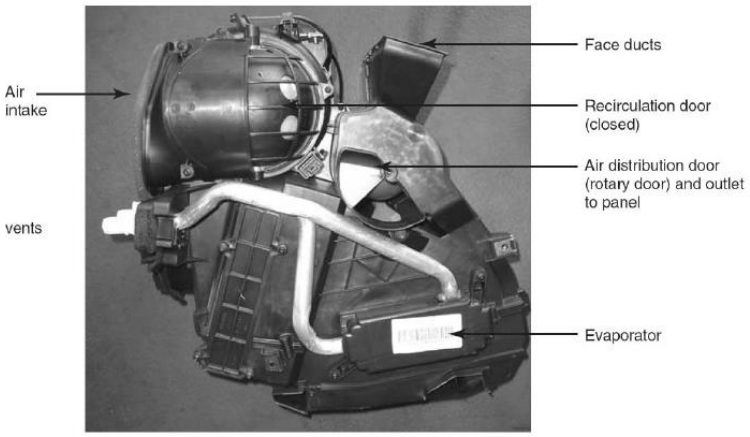

Figure 2.6.70 Air Distribution System

An air conditioning system for motor vehicles Figure 2.6.71 It has the role of regulating the temperature and humidity in the passenger compartment, ensuring passenger comfort and preventing fogging of the windows. It works on the same principle as a stationary air conditioning system, using a refrigerant refrigeration cycle to transfer heat from inside the vehicle to the outside.

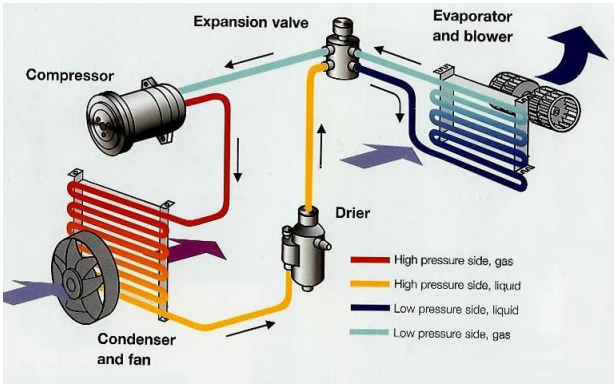

Figure 2.6.71 Air cooling system

Compressor Figure 2.6.72 It is the central component of the car air conditioning system and is usually mechanically driven by the vehicle's engine through a transmission belt, in some vehicles it is driven by an electric motor. Its role is to compress the refrigerant (usually R-134a or R-1234yf), increasing its pressure and temperature. The compressed refrigerant, in a gaseous state, is sent to the condenser to begin the cooling process.



Figure 2.6.72 Compressor

Heat exchanger Figure 2.6.73 It is a heat exchanger mounted at the front of the vehicle, in front of the engine radiator. It has the role of dissipating the heat taken from the passenger compartment and transforming the refrigerant from hot gas into high-pressure liquid. The radiator fan and the air current generated by the vehicle's movement contribute to the efficient cooling of the condenser.



Figure 2.6.73 Heat exchanger

After the refrigerant has been condensed and is in a liquid state at a high pressure, it passes through an expansion valve Figure 2.6.74 or a relaxation capillary tube, where its pressure drops suddenly. This drop in pressure also causes a drop in temperature, preparing the refrigerant to absorb the heat from the passenger compartment.



Figure 2.6.74 Expansion Valve

Vaporizer Figure 2.6.75 It is a heat exchanger located inside the vehicle, usually under the dashboard, behind the climate control panel. The refrigerant with low pressure and temperature circulates through the evaporator, absorbing heat from the air in the passenger compartment. This process causes the refrigerant to evaporate and cool the air, which is then distributed through the vents to the interior of the vehicle.



Figure 2.6.75 Vaporizer

The car air conditioning system is equipped with a fan Figure 2.6.69 which forces the air to circulate through the evaporator and distributes it in the passenger compartment. The system also includes a cabin filter, which traps dust, pollen and other impurities, improving the air quality inside the car. Modern car air conditioning systems are equipped with temperature and humidity sensors that automatically adjust the operation of the system to maintain the desired conditions. Advanced models can also include air quality sensors, which activate air recirculation when it detects pollutants outside.

Operating cycle of the car air conditioning system

1.The compressor compresses the refrigerant in a gaseous state, increasing its temperature and pressure.

2.The condenser cools the refrigerant, turning it into a high-pressure liquid.

3.The expansion valve reduces the pressure of the refrigerant, lowering its temperature.

4.The evaporator allows the refrigerant to absorb heat from the cabin air, cooling it and recirculating it inside.

5.The refrigerant returns to the gaseous state and is sent back to the compressor to repeat the cycle.

Types of car air conditioning systems

- Manual climate control – the user manually adjusts the temperature and fan speed.
- Automatic climate control – the system automatically adjusts the parameters to maintain the set temperature.
- Dual-zone or multi-zone climate control – allows different temperatures to be set for the driver and passengers.

The air cooling system in vehicles is an essential system for ensuring the comfort and safety of passengers, operating on the basis of a complex but highly efficient refrigeration cycle. By using a refrigerant and a set of interdependent components – compressor, condenser, evaporator, expansion valve and fans – this system allows the temperature and humidity of the air in the passenger compartment to be regulated, contributing to an optimal environment in all climatic conditions.

In addition to thermal comfort, car climate control plays a key role in preventing driver fatigue by maintaining a pleasant temperature and adequate humidity levels, which improves attention and reflexes while driving. Also, the rapid elimination of fog from the windshield and side windows ensures optimal visibility, reducing the risk of accidents caused by excessive condensation.

Over time, technology has evolved significantly, and modern car air conditioning systems have become more efficient and intelligent, integrating advanced sensors for automatic temperature and air quality regulation. From manual climate control to multi-zone systems and air ionization functions, the automotive industry has placed an increasing emphasis on comfort, energy efficiency and environmental protection.

Proper maintenance of the air conditioning system, including regular refrigerant checks, cleaning air filters, and inspecting mechanical components, is essential to maintain its long-term performance. A well-

maintained air conditioning system not only ensures a pleasant environment for passengers, but also contributes to the overall efficiency of the vehicle, preventing engine overload and reducing unnecessary fuel consumption.

In conclusion, the air cooling system in vehicles is not only a comfort element, but also a determining factor for safety and efficiency, being indispensable in modern climatic conditions. With constant innovations in the field and proper maintenance, it remains one of the most important features of any modern vehicle.

The heating system of a vehicle's cabin is an important element for the comfort and safety of passengers, especially in low temperature conditions. It not only ensures a pleasant climate inside the car, but also contributes to the rapid defogging of the windshield and windows, improving visibility and preventing accidents. Unlike the air conditioning system, which works on the basis of a refrigeration cycle, cabin heating uses heat generated by the combustion engine or, in the case of electric vehicles, a dedicated heating system.

In vehicles equipped with internal combustion engines, heating is achieved by recovering the heat dissipated by the engine during operation. The heating system is integrated into the engine's cooling circuit and includes the following main components:

1. Engine and coolant

During operation, the motor generates a considerable amount of heat, which must be dissipated to prevent overheating. This heat is taken up by the coolant, which circulates through the engine block, taking over the heat produced by burning the fuel.

2. Heating radiator

The heating radiator is a small heat exchanger mounted inside the passenger compartment, usually under the dashboard, through which hot coolant passes. This radiator is similar to the main one of the engine's cooling system, but it has the role of transferring heat to the air that will be distributed inside the car.

3. Fan and air distribution system Figure 2.6.69

A fan forces air to pass through the heating radiator, where it takes heat from the coolant. The resulting warm air is then distributed to the passenger compartment through the car's ventilation system. The direction of the airflow can be adjusted to heat the entire cabin or to concentrate heat on the windshield for defogging.

4. Coolant Control Valve

In some vehicles, the flow of coolant to the heating radiator is regulated by a control valve. This adjusts the coolant flow rate to allow the temperature of the warm air blown into the passenger compartment to be regulated. In other vehicles, the heating system works through a mixture of cold and warm air, controlled by internal flaps in the ventilation system.

5. Control panel and temperature sensors

The temperature inside the car is controlled by the climate control panel, which can be manual or automatic. In automatic systems, temperature sensors detect the level of heat in the cabin and intelligently adjust the flow of warm air to maintain the temperature set by the user.

Cabin heating in electric and hybrid vehicles

In electric and hybrid vehicles, where there is no internal combustion engine to generate waste heat, heating is carried out by other methods:

1. Electric heaters

Many electric vehicles use electric resistors to generate heat. They work similarly to an electric radiator, using electric current to heat the air that is then distributed in the passenger compartment. This system provides a quick response, but can consume a significant amount of energy, reducing the vehicle's range.

2. Heat pump

Some modern electric vehicles are equipped with heat pumps, which work similarly to an inverted air conditioning system. They extract heat from the outside environment and transfer it to the passenger compartment, providing high energy efficiency compared to traditional electric heaters.

3. Battery heating and thermal management

In the case of electric vehicles, maintaining an optimal battery temperature is essential for their efficiency and range. Advanced thermal management systems use coolant that can be heated and used to deliver heat to the cabin.

Types of cabin heating systems

- Manual heating – the user manually adjusts the intensity of the hot air and its distribution.

- Automatic heating – an electronically controlled system adjusts the temperature according to the preset parameters.
- Zone heating (dual-zone or multi-zone) – allows different temperatures to be set for the driver and passengers.
- Auxiliary heating (Webasto or Eberspächer) – independent systems that run on diesel or petrol and can heat the passenger compartment before the engine starts.

To ensure the optimal operation of the vehicle's heating system, regular maintenance is particularly important. Among the most important aspects are:

- Checking the level and quality of the coolant – a worn or contaminated liquid can affect the performance of the system.
- Cleaning and replacing the cabin filter – a dirty filter can reduce heating efficiency and air quality.
- Check the operation of the fan and air distribution flaps – their defects can affect the direction of the flow of hot air.
- Inspecting the heating radiator for possible leaks or clogs – a radiator problem can lead to a cold cabin even if the engine is overheated.

Auxiliary heating systems are engine-independent devices designed to heat the passenger compartment and, in some cases, the engine, without the engine being started. These systems are essential for vehicles operating in extreme climatic conditions, providing immediate thermal comfort and reducing engine wear caused by cold starts.

There are two main categories of auxiliary heating systems: fuel heaters and electric heaters, each of which has its own specific advantages and applications. Auxiliary fuel heaters

These systems operate on the basis of fuel combustion (diesel or gasoline) and are used in particular in vehicles with internal combustion engines, including trucks, buses, caravans and passenger vehicles.

a)Air heaters Figure 2.6.76 (Air Heater)

This type of system heats the air in the passenger compartment or cargo compartment directly, without interacting with the engine's coolant.

Main components and operation

- Burner – fuel is injected and ignited to generate heat.
- Combustion chamber – transfers heat to the heat exchanger.
- Heat exchanger – heats the air that will be distributed in the passenger compartment.
- Fan – forces hot air to circulate through the vents.
- Control system and sensors – regulates temperature and optimises fuel consumption.

Advantages:

- It can work independently of the engine.
- It provides fast and efficient heating.
- Low fuel consumption (~0.1-0.3 l/h).
- Ideal for trucks, caravans, commercial and off-road vehicles.

Disadvantages:

- It requires separate installation and periodic maintenance.
- It can produce noise (especially older models).

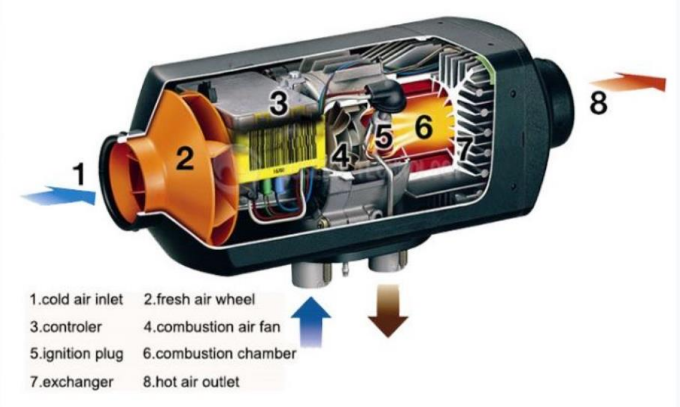

Figure 2.6.76 Auxiliary heater

b)Liquid heaters Figure 2.6.77 (Water Heater)

This system heats the engine coolant and implicitly the air in the passenger compartment through the car's heating radiator.

Main components and operation

- Combustion unit – fuel is burned to generate heat.
- Circulation pump – ensures the circulation of the heated coolant.
- Heat exchanger – transfers heat to the coolant.
- Control system – regulates the operation of the system and optimizes consumption.

Advantages:

- It warms up both the engine and the passenger compartment, preventing engine wear when starting cold.
- Integration with the machine's ventilation system for even heat distribution.
- Possibility of programming or remote control via remote control or smartphone.

Disadvantages:

- More complex installation compared to air heaters.
- Fuel and electricity consumption for the circulation pump.
-

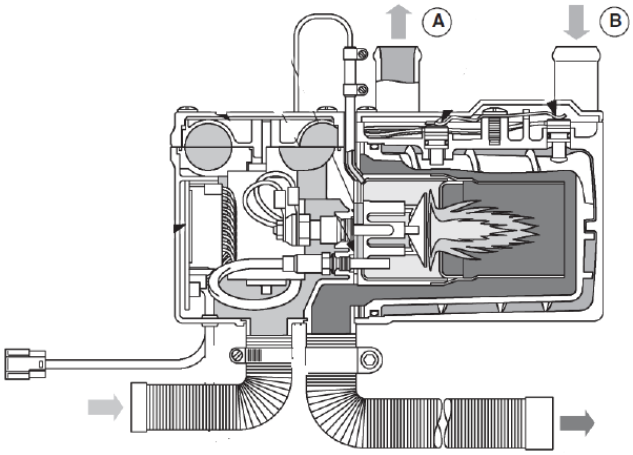

Figure 2.6.77 Auxiliary liquid heating system

Well-known manufacturers of auxiliary fuel heaters:

- Webasto – market leader, offering solutions for cars, trucks and special vehicles.
- Eberspächer – specialized in efficient and compact auxiliary heaters.

The cabin heating system is an element of particular importance for the comfort and safety of passengers, operating on the basis of heat transfer from the engine or, in the case of electric vehicles, through advanced heat generation technologies. In addition to maintaining an optimal temperature inside the car, it plays a role in defogging the windshield and windows, preventing visibility problems in low temperature conditions.

With the evolution of technology, modern heating systems are becoming more and more efficient, providing precise temperature control and reducing energy consumption. Proper maintenance of this system is important for proper long-term operation, ensuring a comfortable and safe environment for the driver and passengers, regardless of the weather conditions.

2.7 Electrical and electronic systems of automobiles

2.7.1 Automotive electrical equipment. General provisions

In modern vehicles, electrical equipment plays a key role in ensuring efficient, safe, and comfortable operation of the vehicle. With the advancement of technology and the growing demands for environmental friendliness, driving convenience, and safety, electrical systems have evolved from auxiliary means into fully functional and control elements of the automobile. A vehicle may contain dozens or even hundreds of electronic control units (ECU) interconnected by digital networks. Today, the vast majority of automotive systems and mechanisms cannot operate fully without electric drives and electronic control systems.

The advantages of electrical components in the automotive industry are increasingly evident over conventional mechanical, hydraulic, and pneumatic systems. Even when they do not completely replace them, electrification grants significant functional benefits through high speed and precision, flexibility, adaptive control, energy efficiency, and environmental performance. This issue becomes even more relevant with the transition of the automotive sector to hybrid and electric vehicles. Thus, to ensure the reliability and safety of vehicles, specialists in the automotive field must understand the principles of operation, design features, diagnostic basics, and maintenance of electrical equipment.

With growing demands for environmental performance, energy efficiency, and functionality, there is an increasing need to raise the level of process automation through the use of electrical and electronic systems. This is driven by several significant advantages over traditional systems:

Precision and speed, flexibility in control of electric drives and electronic systems (ensuring high positioning accuracy, quick system response, integration into the vehicle's onboard network, adaptive and programmable control and regulation).

Reliability and reduced maintenance needs (electrical equipment lifespans match the vehicle life cycle, minimizing adjustments and mechanical wear, reducing sealing requirements and working fluid constraints, etc.).

Compactness and reduced weight (electrical components can be lighter and more compact while maintaining high specific performance).

Energy savings and environmental friendliness (electric drives operate only when needed, reducing the load on the power supply system and fuel consumption, lowering noise levels, simplifying recycling to protect the environment, and improving comfort).

Electrical equipment has undeniable advantages; however, in modern automotive engineering it continues to be used alongside other types of drives. In certain systems, mechanical, hydraulic, or pneumatic drives remain practical due to their simplicity and reliability (for example, mechanisms with fixed positions, manipulators, brakes of heavy-duty vehicles, etc.), ensuring a balance between drive types according to specific operating conditions and cost limitations.

Widespread adoption is limited by:

Dependence on power supply and loss of functionality in case of failure (electrical systems require a stable power source and reliable connections; for instance, if an ECU or data bus fails, not only a single device but an entire system or network may stop functioning).

Complexity and higher cost (complex design and circuitry increase production and operation costs. Diagnostics and repairs of electronics require special equipment and high-level skills, and repairs are often impossible – or impractical – especially in field conditions).

Sensitivity to external factors (moisture, dirt, electromagnetic fields and interference, accelerations, vibrations, temperature).

Challenges in predicting and ensuring the lifespan of certain components (such as semiconductors and circuit boards), which can fail under peak loads or overheating.

Currently, the most large-scale and versatile market trend is the comprehensive computerization of the car. That is, screens with a fairly large diagonal built into the dashboard of the car have already become the norm, which, along with entertainment functions, also solve the problem of facilitating the car's navigation in space, and work is in full swing to create transparent monitors built into the windshield.

Electronic vehicle system – a vehicle system (unit) whose operating algorithm is determined by the basic electrical circuit of the control unit or the entire unit. Technically, the electronic control unit (ECU) or the entire unit can be made on discrete and (or) integrated radio elements, and changing the operating algorithm of the system or unit is impossible without changing the electrical circuit.

Microprocessor system of a car – a car system, the algorithm of functioning of which is determined by the program of the processor of the electronic control unit (ECU). Thus, in this system there is always a

control unit based on a microprocessor and to change the algorithm of the system operation it is necessary to change the microprocessor program. Currently, considerable experience has been accumulated in the application of electronic equipment in cars. The use of this experience is an important condition for accelerating the development of new, more advanced electronic devices.

Unlike the initial period of automotive development
electronics, modern is characterized by the presence of basic
four directions:

- creation of electronic devices to replace traditional automotive electrical equipment components (voltage regulators, light and sound signaling controls, heating, air conditioning, engine preheating system regulators, tachometers, speedometers);
- the use of electronic devices (including those using computers) for continuous monitoring and providing current information about the vehicle's performance (for example, current fuel consumption, whether a particular gear should be changed for optimal driving conditions, etc.); this category of devices should also include systems for diagnosing the condition of vehicle units;
- development of electronic equipment for controlling ignition, fuel supply and systems that ensure reduction of engine exhaust gas toxicity;
- creation of electronic devices for control systems of transmission units, brake systems and other vehicle components (except the engine).

The use of electronic equipment in the control systems of vehicle units has in some cases led to the expediency of changing the design of the units themselves. Therefore, a modern automotive electronic control system is actually a complex of the electronic equipment itself and the executive devices controlled by it.

Electronic control systems created on the basis of discrete elements and integrated circuits that perform a specific control task belong to systems with rigid logic, the algorithm of their functioning is determined by the system's circuitry.

In microprocessor systems, there is no such limitation, i.e., with the same structure, these systems can implement different control algorithms due to the corresponding change in the recording of commands in the system's memory elements. Due to this, microprocessor systems form a special class of electronic control systems and have a number of unique capabilities in terms of implementing the most complex control tasks.

The rapid development of electronic control systems, namely their reduction in cost and minimization of size, leads to the emergence of new types of electronic devices, increasing the performance of electronic control units used in vehicles. Recently, there has been an increasing bias in the development of new design solutions towards active and passive safety systems for cars.

The most well-known and popular electronic active safety systems for cars today are:

- anti-lock brake system;
- anti-skid system;
- exchange rate stability system;
- brake force distribution system;
- emergency braking system;
- pedestrian detection system;
- electronic differential lock.

The listed active safety systems are structurally connected and closely interact with the car's braking system and significantly increase its efficiency. A number of electronic systems can control the amount of torque through the engine management system.

There are also auxiliary active safety systems (assistant systems) designed to help the driver in difficult driving situations. In addition to timely warning the driver of possible danger, electronic systems also actively intervene in the control of the car, using the braking system and steering.

Auxiliary active safety systems include the following electronic systems:

- parking system;
- all-round vision system;
- adaptive cruise control;
- emergency steering system;
- lane keeping assistance system;
- reconstruction assistance system;
- night vision system;
- road sign recognition system;

- driver fatigue monitoring system;
- descent assistance system;
- lifting assistance system.

Depending on the design of a particular electronic system in
The following functions can be implemented:
- warning the driver about the risk of collision;
- emergency brake system preparation
braking;
- activation of individual passive safety devices;
- partial or full automatic braking.

To implement these functions in preventive safety systems, adaptive cruise control technologies, dynamic stabilization systems, and passive safety systems are used. A number of preventive systems that implement the automatic braking function are called emergency braking systems. Thus, a preventive safety system is an effective symbiosis of active and passive safety systems. Currently, preventive safety systems are quite widespread and are actively implemented in passenger cars.

The set of structural elements used to protect passengers from injury in an accident constitutes the passive safety system of a vehicle. The system must provide protection not only for passengers and a particular vehicle, but also for other road users. The most important components of a passive safety system of a vehicle are:

- seat belts;
- active headrests;
- airbags;
- safe body design;
- emergency battery disconnect switch;
- a number of other devices (rollover protection system on a convertible; child safety systems - mounts, seats, seat belts).

Modern electronic systems for automatic control of various technical objects, including automotive on-board devices, have a similar structure. Various sensors of control systems convert information about the values of controlled non-electrical parameters into an electrical signal - voltage, current, frequency, phase, etc. These signals are converted into a digital code and fed to the microcontroller. Based on the values of these signals and in accordance with the software embedded in it, the microcontroller makes decisions and controls the object through actuators (relays, solenoids, electric motors).

The ability to improve automotive electronic systems depends largely on the availability of reliable, accurate, and inexpensive sensors.

In the 1960s, cars were equipped with sensors for oil pressure, fuel level, temperature, and coolant. Their outputs were connected to gauges or lamps on the instrument panel.

In the 1970s, automobile companies joined the fight to reduce the amount of toxic emissions from the car's muffler - additional sensors were needed to control the power plant, which were necessary to ensure the normal operation of the electronic ignition, fuel injection system, three-component catalyst, to accurately set the air/fuel ratio in the working mixture, and to minimize the toxicity of exhaust gases.

In the 1980s, more attention began to be paid to the safety of the driver and passengers - anti-lock braking system (ABS) and airbags appeared.

In the powertrain (Figure 2.7.1), sensors are used to measure the temperature and pressure of most media (intake air temperature, absolute pressure in the intake manifold, oil pressure, etc.).

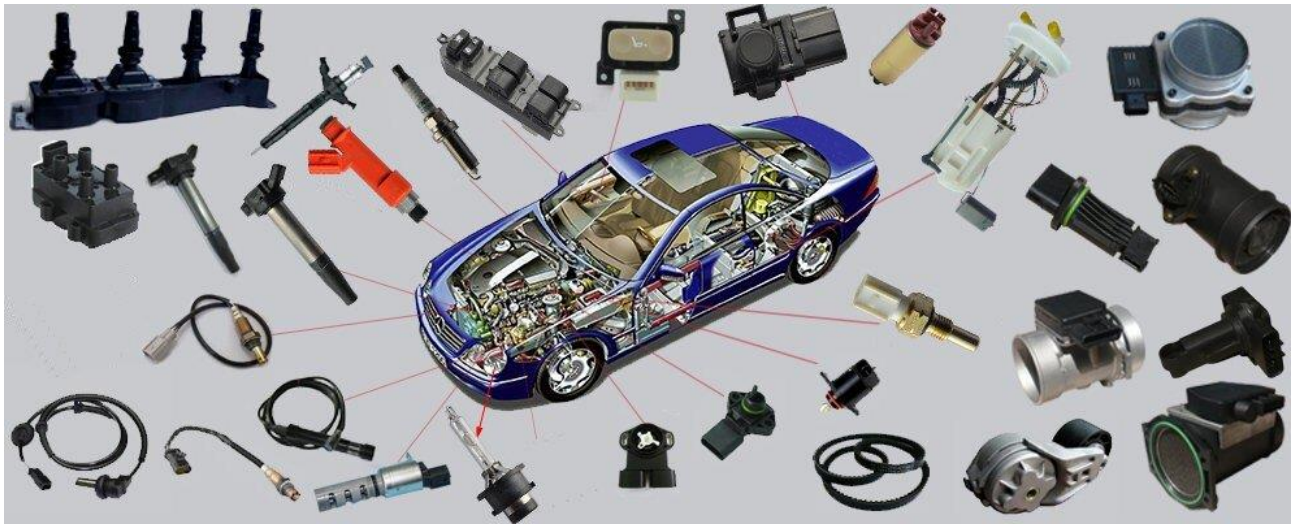

Figure 2.7.1 – Location of sensors on a car

Almost all moving parts of a car have speed or position sensors connected to them (vehicle speed, throttle position, crankshaft position, camshaft position, position and speed of rotation of the shaft in the gearbox, position of the exhaust gas recirculation valve) [1].

Other sensors determine the level of detonation, engine load, misfires, and oxygen content in exhaust gases.

The climate control system (climate control) uses various sensors in the air conditioner to determine the pressure and temperature of the refrigerant, the air temperature in the cabin and outside.

There are sensors that determine the position of the seats. After the advent of anti-lock braking systems and active suspension, sensors were needed to determine the speed of rotation of the wheels, the height of the body in relation to the chassis, and the pressure in the tires.

Impact sensors and accelerometers are required for the proper functioning of the front and side airbags. For the front passenger seat, sensors are used to determine the presence of a passenger and their weight. This information is used to optimally inflate the front seat airbag. Other sensors are used for side and curtain airbags, as well as special airbags to protect the neck and head.

In modern cars, anti-lock braking systems are being replaced by more complex and effective vehicle stability control systems. There is a need for new sensors. Sensors for the speed of rotation of the car around the vertical axis, sensors for preventing collisions (for example, radar), sensors for determining the proximity of other cars, sensors for the position of the steering wheel, lateral acceleration, speed of rotation of each wheel, torque on the engine shaft, etc. are being developed and already exist. Controlling the car's braking system is becoming part of a more general and effective system for electronic control of directional stability and stability of movement. From the above, it is clear that today sensors are installed in almost all car systems.

Sensors of automotive electronic systems can be classified according to three characteristics: operating principle, type of energy conversion, and main purpose [1].

According to the principle of operation, sensors are divided into electrocontact, potentiometric, optical, optoelectronic, electromagnetic, inductive, magnetoresistive, magnetostrictive, photo- and piezoelectric, as well as sensors based on the Hall, Doppler, Karman, Seebeck, and Wygond effects. Depending on the energy conversion, sensors are active, in which the output electrical signal arises as a result of an input non-electrical influence without the application of external electrical energy using an internal physical effect, and passive, in which the electrical signal is the result of modulation of external electrical energy by a controlling non-electrical influence. For example, a potentiometric sensor is a passive converter of the angle of rotation of the potentiometer axis (sensitive element) into an electrical signal. An electrical signal will appear at the potentiometer output only when an external voltage is applied to the resistive track. It should be noted that inside the sensor, in the form of a sensitive element, there is always an internal conversion of the external non-electrical influence into an intermediate non-electrical signal. As for the rotation angle sensor, the angular position of the potentiometer axis is a non-electrical signal at the output of the sensitive element [1].

This non-electric signal corresponds to the electrical signal of the sensor, if the external voltage applied to the resistive track is constant. The linear characteristic of the transformation can be easily changed

to quadratic, step and any nonlinear with a given slope, which is achieved by selecting the structural dimensions (length, width, thickness) of the resistive track.

By purpose, sensors are classified by the type of non-electrical control effect: extreme position sensors, angular and linear displacement sensors, frequency and speed sensors, pressure sensors, temperature sensors, humidity sensors, oxygen concentration sensors, radiation sensors, etc.

Sensors are connected to the control unit or display devices to transmit information about the parameters of the controlled environment. In automotive systems, price and reliability are of great importance and, other things being equal, sensors with the fewest number of connectors are always chosen. If 5-6 wires are connected to the sensor, it is advisable to place the signal processing chip directly on the sensor and transmit data to the controller via a serial interface.

When connecting sensors to the ECU, it should be borne in mind that the vehicle chassis cannot be used as a measuring ground. Between the point of connection of the ECU to the ground and the sensor, the voltage can drop to 1 V due to power currents on the "ground", which is unacceptable both during normal operation of the sensor and during its diagnostics.

2.7.2 Electrical circuits and networks

The modern vehicle electrical network is a complex, multi-level system involved in controlling virtually all functions of the vehicle. The transition to hybrid systems and electric vehicles is accompanied by more complex network architecture, the introduction of high-voltage circuits, and new principles of energy distribution, which require greater integration of advances in electrical engineering, electronics, and software development.

A vehicle's electrical circuits comprise a set of power sources (battery, alternator), connection means and conductors (wires, cables, connectors, terminals, bodywork), energy consumers (starter, lighting, fans, heaters, drive motors, actuators, control units, etc.), control devices (switches, relays, electronic switching units), and component protection devices (fuses, relay protection), forming a closed system for the transmission and use of electrical energy.

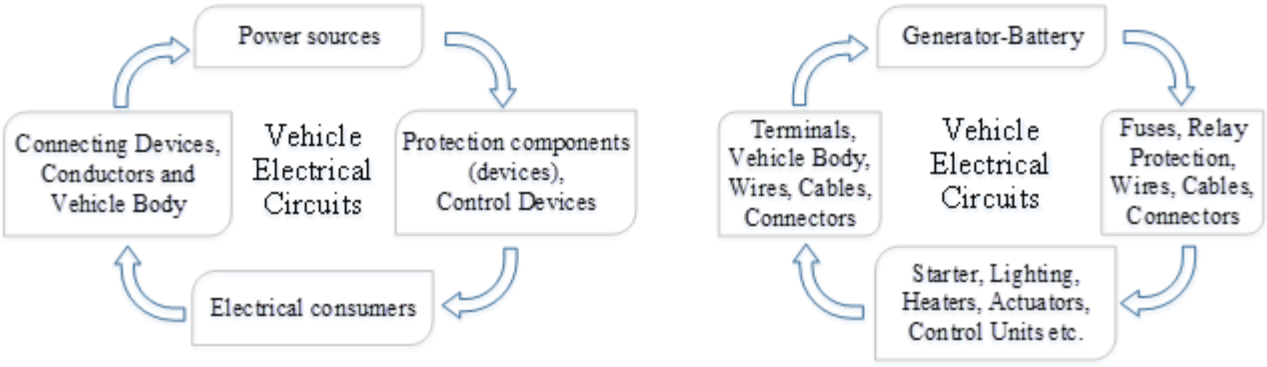

Figure 2.7.2 – Components of the vehicle electrical circuits

In modern vehicles, digital data buses are used for signal (data) transmission. They significantly simplify the electrical architecture, reduce the number and weight of wires, facilitate diagnostics, and enable the implementation of complex functions.

Data bus technologies are communication systems that provide data exchange between electronic control units (ECUs), sensors, actuators, and other components of the vehicle's electrical equipment.

CAN (Controller Area Network) – the main universal bus for data exchange between engine control units, chassis systems, structural safety systems, and more. It supports message prioritization and operates in real-time.

LIN (Local Interconnect Network) – a simple, unidirectional master-slave bus, often used alongside CAN as a subsystem for auxiliary devices (power windows, mirrors, seats).

FlexRay, MOST (Media Oriented Systems Transport), Ethernet (Automotive Ethernet) – bus technologies used in systems requiring high-speed data transmission. For example, FlexRay is applied in chassis and autonomous driving systems; MOST is used for synchronous, delay-free transmission of audio and video data. Automotive Ethernet is gradually replacing FlexRay and MOST, and with its high speed

(100 Mbps and above) it is suitable for ADAS, video streaming, and V2X communications.

The basis of all electromagnetic phenomena is the electromagnetic field and electric charge. ***An electromagnetic field*** is a special type of matter that combines two of its components at all points in space, called, respectively, the electric and magnetic fields. ***An electromagnetic field*** manifests itself through its action on electrically charged particles.

Electric charge q – source of electromagnetic field, which is associated with a material carrier; elementary electric charge – is an internal parameter of an elementary particle, which determines its electromagnetic nature, ability to interact. The entire set of electric and magnetic phenomena is a manifestation of the existence, movement and interaction of electric charges. There are two types of electric charges, which are conventionally called positive ("+") and negative ("–"). The latter are named after the electron – an elementary negatively charged particle; electron charge $e = 1{,}6 \cdot 10^{-19}$ *Кл*.

An electric field is one of the two components of an electromagnetic field, which manifests itself in the action on an electrically charged particle with a force $\overline{F}_E$ proportional to the charge of the particle q and independent of its speed of motion. This field is characterized by a vector quantity - the electric field strength $\overline{E}$, which is numerically equal to the ratio of the force acting on a charged particle to its charge and has the direction of the force acting on a particle with a positive charge, i.e. $\overline{E} = \lim\limits_{q \to 0} \dfrac{\overline{F}_E}{q}$.

Magnetic field is the second component of the electromagnetic field, which manifests itself in the action on a moving electrically charged particle with a force $\overline{F}_M$ proportional to the charge of the particle q and the speed of its movement V. This field is characterized by vector quantities: the magnetic field strength $\overline{H}$ and the magnetic induction associated with it $\overline{B}$. Numerically, magnetic induction is equal to the ratio of the force F_M to the product of the charge q and the velocity V of the particle, that is $B = \lim\limits_{q \to 0} \dfrac{F_{M\max}}{q \times V}$, if the direction of the velocity is such that this force is maximum. The magnetic induction vector is perpendicular to the force $\overline{F}_M$ and velocity vectors $\overline{V}$, and its direction coincides with the translational movement of a right-handed screw when it rotates from the direction of the force to the direction of the velocity of the particle with a positive charge. As a result, the listed quantities are combined by the $\overline{F}_M = q\left[\overline{V} \times \overline{B}\right]$formula

In their natural state, various material bodies are electrically neutral, that is, elementary positive and negative charges are evenly distributed in their volume and balance each other. To release charges of different signs and make them move in a given direction, energy must be expended. Forces that separate charges of different signs, overcoming the electrostatic forces of attraction between them, are called extraneous forces. The origin of extraneous forces can be different: in electromechanical generators, these are mechanical forces transmitted through a vortex electric field that arises when the magnetic field changes over time, or these are Lorentz forces acting from the side of the magnetic field on electrons in a moving conductor; in galvanic cells, these are chemical forces.

A number of formal physical quantities are used to describe electromagnetic fields and processes. Along with the quantities already mentioned, the following electrical quantities also play an exceptional role.

Electric current is an ordered (directed) movement of electrically charged particles. The direction of current is taken to be the direction of movement of positively charged particles. If the current is created by negatively charged particles (for example, electrons), then the direction of current is considered to be opposite to the direction of their movement. Quantitatively, electric current is characterized by a scalar quantity - ***current strength*** I and a vector quantity – the density of the electric current $\overline{J}$. The current strength is equal to the ratio of the absolute value of the electric charge dq, which passes in a short period of time dt through a certain surface (for example, through the cross-section of a conductor), to the value dt, i.e. $I = dq / dt$.

To describe the potential energy capacity of an electric field, a scalar quantity is used - ***electric potential.*** φ. The potential of a given point in the field is the ratio of the work A that the field can do by moving a charge q from a given point to an infinitely distant point, to the charge itself, i.e. $\varphi = A / q$. The infinitely distant point is taken to be where the electric field is absent and, therefore, where the potential is

zero.

Electric voltage is a scalar quantity that is related to potential and is introduced for the energy characteristic of an electric field or electric circuit. It characterizes the ability of the field to perform work when moving charged particles between points in space. The electric voltage between two points of an electric circuit or electric field is numerically equal to the work of the electric field spent on moving a unit positive charge from point a to point b. In the general case, the voltage is equal to the ratio of the work A that the field performs when moving a charge q from a given point to another point to the magnitude of the charge, i.e. $U_{ab} = A/q$. In a potential electric field (electrostatic field), this work does not depend on the path of movement of the charge. In this case, the electric voltage between two points is equal to the potential difference between them, i.e. $U_{ab} = \varphi_a - \varphi_b$.

Electromotive force (EMF) is a scalar quantity that characterizes the action of external forces in sources of direct or alternating current. External forces cause electric charges to move inside generators, galvanic cells and other current sources. EMF E (E not to be confused with the designation of electric field strength) is numerically equal to the work performed by the forces of an external electric field (not electrostatic) when moving a unit of positive electric charge along a closed circuit of an electric circuit. In the general case, EMF is equal to the ratio of the work A performed by external forces, moving the charge q along a closed conductor circuit, to the magnitude of the charge, i.e. $E = A/q$. On the other hand, the EMF of a voltage source is equal to the potential difference or voltage on its electrodes (poles) with an open external circuit, i.e. in the absence of electric current in the source.

The interaction and relationship of quantities describing electromagnetic processes in electrical devices are governed by the laws of electromagnetism. Below, these laws are formulated mainly in relation to the concepts of direct current, as is customary in the physics course; in the future, these laws will also receive a more widespread interpretation.

An electrical circuit is a set of devices that are designed to generate, transmit, and convert electrical energy and create a closed path for current flow.

Individual devices in an electrical circuit are called elements of an electrical circuit. Elements of a circuit that are designed to generate electrical energy are called power sources, and elements that receive electrical energy are called receivers.

In addition to the main elements - sources and receivers of electricity - electrical circuits also include various additional elements: devices and instruments designed for control, regulation and protection. Additional elements, like the main ones, are connected to the circuit using conductors to provide a closed path for the flow of electric current.

Elements of an electrical circuit are divided into active and passive. All sources of electrical energy are active elements and they are characterized by a certain value of electromotive force (EMF). Receivers of electricity can be both active and passive. Passive receivers are those in which no EMF occurs.

Passive elements are characterized by electrical resistance, which in some elements depends on the magnitude and direction of the applied voltage (nonlinear elements), and in others does not (linear elements).

The main characteristics of an electric circuit can be obtained and described using quantities known from the physics course: electromotive force E **,** voltage U , current I , electrical resistance R.

There is a force field in the source, under the action of which charges move inside the source. As a result, an excess of positive charges is created near one terminal, and an excess of negative charges at the other. The force field of the source has a non-electrostatic origin and is therefore called an extraneous field. In DC generators, it is caused by electromagnetic induction, in galvanic cells and batteries - by chemical reactions, in thermogenerators - by heating.

As a result of the distribution of charges inside the source, as well as in the external circuit, an electric field arises. The forces of the electric field inside the source act on the charges in the opposite direction relative to the forces of the external field. If the receiver is disconnected, the movement of charges inside the source stops when the forces of the electric field become equal to the forces of the external field. After connecting the receiver, under the action of the forces of the electric field in the external circuit, a directed movement of electric charges begins, that is, an electric current arises. As a result of the partial neutralization of charges near the electrodes, the forces of the electric field inside the source become less than the forces of the external field, which causes an electric current also inside the source.

The electric field between any of its points is characterized by the voltage U or the potential difference between these points. The voltage is equal to the work performed by the electric field forces when moving a

positive unit charge from one point of the field to another.

The external field of the source between its terminals is estimated by the electromotive force *E*. The EMF is numerically equal to the work performed by the external field forces when moving a positive unit charge from one terminal of the source to another.

So, the cause of voltage and current in an electric circuit is an external field or EMF of the source. The nature of the change in the EMF also depends on the nature of the change in the current in the electric circuit. Thus, sources of direct current electricity have a constant EMF, as a result of which the voltages and currents in direct current electric circuits also remain constant.

The basic unit of measurement of EMF and voltage is the Volt (1V), Kilovolt (1kV = 10^{3} V) and Millivolt (1mV = 10^{-3} V).

The magnitude of the current is estimated by the amount of electricity (the number of positive and negative charges) that passes through the cross-section of the conductor per unit of time. If different amounts of electricity pass through the cross-section of the conductor at equal intervals of time, then the current is considered alternating, and if the same amount of electricity passes through the cross-section, then the current is called direct.

The basic unit of measurement of current is the Ampere (1A) or milliampere (1mA = 10^{-3} A) and microampere (1μA = 10^{-6} A).

The conductive parts (conductors) of various elements of an electrical circuit oppose the movement of electric charges through them, which is estimated by a quantity called resistance. The resistance of a conductor is determined by the formula:

$$R = \frac{\rho l}{S}, \tag{2.7.1}$$

where ρ is the resistivity of the conductor material, Ohm · mm^2/m;

l, S – length in meters and cross-sectional area of the conductor in square millimeters.

In addition to the ohm unit of resistance, the kilohm (kOhm =
=10^{3} Ohm) and megaohm (mOhm = 10^{6}).

The resistance of metal conductors increases with increasing temperature. This relationship is expressed by the formula:

$$R_2 = R_1\left[1+\alpha\left(t_2 - t_1\right)\right], \tag{2.7.2}$$

where t_1 and t_2 are the initial and final temperatures;

R_1 and R_2 – conductor resistance at temperatures t_1 and t_2 ;

α - temperature coefficient of resistance.

The reciprocal of resistance is called conductivity and is denoted by the letter $g = 1/R$. The unit of measurement for conductivity is Siemens (Sm = Ohm^{-1}).

To facilitate the calculation of electrical circuits, an equivalent electrical circuit diagram is used - a graphic representation of a real electrical circuit. The diagram shows the sequence of connection of the elements of the electrical circuit. For the graphic representation of the diagram, conventional graphic symbols established by the standards of the design documentation system are used (Table 2.7.1).

Table 2.7.1 – Basic symbols in electrical engineering

Symbols	Name
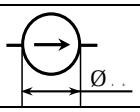	voltage source
	current source
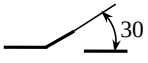	single-pole switch

Symbols	Name
	double-pole switch
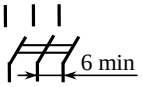	three-pole switch
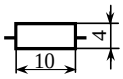	linear resistor
	Nonlinear resistor
	capacitive element, capacitor
	inductive element, inductor
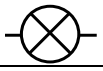	incandescent lamp, signal or lighting
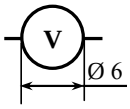	voltmeter
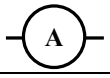	ammeter
	wattmeter
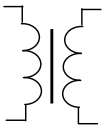	single-phase transformer with magnetic core
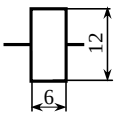	coil of a relay, contactor, magnetic starter, electromagnet
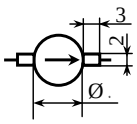	rotor with winding, commutator and brushes (brushes are depicted as necessary)
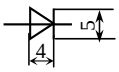	diode
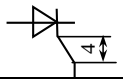	thyristor

When constructing a circuit, idealization is allowed: the EMF of generators is considered independent of the currents flowing through these generators; the resistance of the connecting conductors is zero and these conductors are depicted on the circuits as lines; each of the passive elements of the electrical circuit is considered ideal, that is, it has only one property that characterizes it. Thus, an ideal inductor (which has neither resistance nor capacitance) is characterized by inductance L, an ideal capacitor (which has neither inductance nor resistance) is characterized by capacitance C, and an ideal resistor is characterized by active resistance R. Resistance, inductance, and capacitance will be considered lumped.

An EMF source with internal resistance R_0 is called real. The ratio of the EMF of the source, the voltage U at its terminals, and the load current I is determined by the equation $U=E-IR_0$.

A power source with very low internal resistance ($R_0=0$) is called ideal. The voltage at its terminals does not depend on the load current and is always equal to E. This corresponds to power sources of very high power (theoretically infinitely high).

If the internal resistance R_0 source of electrical energy is much greater than the resistance of the passive receiver R_t, then the source current remains practically unchanged when $R_{t\ changes}$. An electrical energy source with a constant current value is called an ideal current source, its internal resistance is considered infinitely large.

The main topological elements of electrical circuit diagrams are branches, nodes, and circuits.

A branch is a section of an electric circuit (a series connection of elements) along which the same current flows. There are as many currents as there are branches in an electric circuit. The number of branches in an electric circuit (circuit) is denoted by the letter δ.

The point where three or more branches meet is called a node (marked with a bold dot on an electrical circuit diagram). If there is no dot on the diagram at the intersection of the lines, this means that there is no electrical connection between the conductors at their intersection.

Any closed path that passes through several branches is called a circuit of an electric circuit. If inside the area bounded by the circuit there are no other branches that connect points belonging to the same circuit, then such a circuit is called a simple or "cell" of an electric circuit.

The number of independent circuits in electrical circuits (schemes) is denoted by the letter n. A circuit is called independent if it includes at least one branch that is not included in other circuits.

There is a relationship between the number of independent circuits, nodes, and branches in an electrical circuit: $n = p - (q - 1)$.

Fig. 2.7.3 shows a circuit diagram of an electric circuit that has two power sources and six resistors. The circuit has seven branches and four nodes.

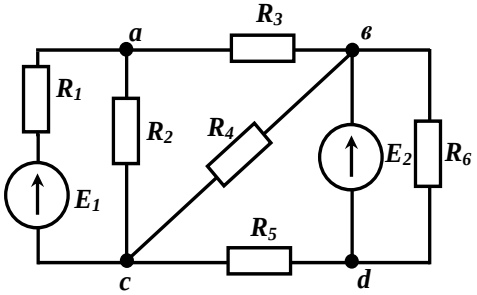

Figure 2.7.3 – Electrical circuit diagram

If the resistance R_3 were zero, there would be three nodes, because there would be no resistance between nodes *a* and *a* and they could be connected into one. The circuit has four cells. In total, 10 different circuits can be distinguished in the circuit.

A connection where the same current flows through all elements is called a series connection of elements.

A connection in which all branches are connected to the same pair of nodes is called a parallel connection. The same voltage is applied to branches connected in parallel.

To unambiguously describe the processes occurring in any element of an electric circuit, it is necessary to know not only the magnitude of the current or voltage, but also their direction at a given moment in time. The arrows placed on the equivalent circuits indicate the positive direction of the EMF of voltages and currents, that is, the direction for which the values of these quantities are positive.

From physics, it is known that the positive direction of current is the direction of movement of positive charges, that is, from "+" to "–".

The positive direction of the source's EMF is taken to be the direction from its negative pole to its positive pole (the direction of action of external forces on a positive charge).

The source voltage or the voltage across the source terminals is directed in the direction of the EMF. The direction of the voltage drop across a passive element of the electrical circuit will be opposite to the direction of the current flowing through that element.

Taking into account the above, Fig. 2.7.4 shows an equivalent circuit diagram of an electric circuit with the designation of the direction of EMF, current, voltage and voltage drops on the elements of the electric circuit. The arrow of the indicated voltage (EMF) always points to the point of higher potential. This method of designation was introduced in 1923 by the founder of the Lviv Electrical Engineering School, Professor S. Frize.

The basic laws of electrical circuits, which make it possible to describe any modes of their operation

with equations, are Ohm's law and Kirchhoff's laws.

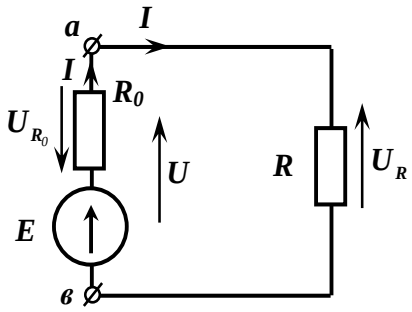

Figure 2.7.4 – Direction of EMF, voltage, current, voltage drops on elements in an electrical circuit

Ohm's Law. In 1827, the German physicist G.S. Ohm established a law that relates the current ^{2} in a conductor to the voltage U on the conductor and its resistance R. The law was established when an electric circuit was powered by a constant voltage source.

The mathematical expression for this law is:

$$I = \frac{U}{R}. \qquad (2.7.3)$$

Ohm's law for a complete electric circuit (Fig. 2.7.4) is determined by the equality

$$I = \frac{E}{R_0 + R}. \qquad (2.7.4)$$

This law is formulated as follows: at a constant resistance of a conductor, the voltage across it is proportional to the current in the conductor. The graphic representation of this dependence has the form of a straight line. (line 1 in Fig. 2.7.5).

For nonlinear elements, the dependencies $U = f(I)$ are nonlinear (curves 2, 3 in Fig. 2.7.5).

Kirchhoff's First Law . German physicist G.R. Kirchhoff in 1845 established the laws of equilibrium in an electrical circuit.

The first law determines the balance of currents at the nodes of an electrical circuit: the algebraic sum of the currents of the branches converging at a node is zero. The mathematical expression for Kirchhoff's first law is:

$$\sum_{k=1}^{n} I_k = 0. \qquad (2.7.5)$$

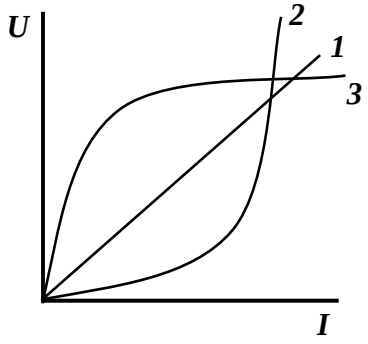

Figure 2.7.5 – Graphical representation of Ohm's law: 1 – for a linear element, 2, 3 – for nonlinear elements

To write Kirchhoff's first law for a particular node, we need to establish a sign rule. For example, we will assume that currents directed towards the node will be positive and currents directed away from the node will be negative.

According to the accepted rule of signs, for the node shown in Fig. 2.7.6 a, the equation according to Kirchhoff's first law has the form:

$$I_1 + I_2 - I_3 - I_4 = 0. \qquad (2.7.6)$$

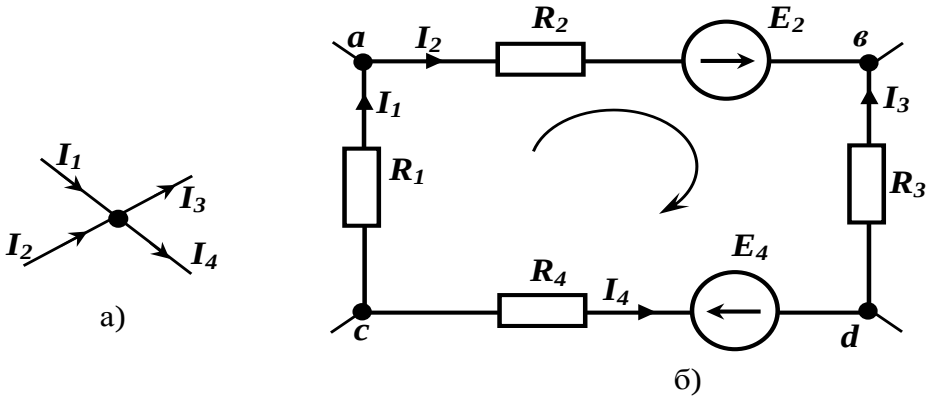

Figure 2.7.6 – Diagrams of a separate node (a) and a separate circuit (b) of an electrical circuit

Kirchhoff's first law follows from the principle of continuity of electric current.

Kirchhoff's second law. It establishes the balance of voltages in the circuits of an electric circuit and is formulated as follows: the algebraic sum of the electromotive forces and voltage drops across the resistors of a closed circuit is zero. The mathematical expression for this law is as follows:

$$\sum_{k=1}^{n} U_k + \sum_{k=1}^{m} E_k = 0 \quad . \qquad (2.7.7)$$

When writing equations of the form (2.7.7), the terms have the sign "+" in the case when the direction of the circuit bypass coincides with the direction of the corresponding voltage or EMF, otherwise the terms have the sign "–". For the circuit shown in Fig. 1.4, b, the equation written on the basis of Kirchhoff's second law when bypassing it clockwise has the form:

$$-I_2R_2 + E_2 + I_3R_3 + E_4 + I_4R_4 - I_1R_1 = 0. \qquad (2.7.8)$$

It is worth noting that Kirchhoff's equations are also valid for instantaneous values of alternating voltages and EMF.

Three-phase EMF system. The transmission of electrical energy from the generator to the consumer occurs using a power transmission line, which has at least two conductors - "forward" and "reverse". Since in real conditions the source and consumer of electrical energy are significantly distant from each other, the connecting conductors have a large length and a complex connection scheme.

If you combine several identical electrical circuits, each of which has a source and a consumer, with the same frequency of change of current, shifted in phase with respect to the currents in other circuits, you can get a case where the sum of the currents in the "return" conductors is zero. In this case, you can remove all the return conductors and thereby increase the efficiency of the power supply. This, in particular, gave the basis for the development of multiphase systems.

Each part of a multiphase system, characterized by the same current, is called a phase. Therefore, the concept of "phase" has two meanings in electrical engineering: the first is the argument of a sinusoidal variable, the second is a part of a multiphase system of electrical circuits. Electrical circuits, depending on the number of phases, are called single-phase, three-phase, six-phase, etc.

A three-phase system is a special case of multiphase systems of electrical circuits and is a set of three

electrical circuits in which independent sinusoidal EMFs of the same amplitude and frequency, created by a common source of electrical energy, operate, shifted in phase from each other by an angle of 120^0. Three-phase systems are the most common. This is explained by a number of economic advantages compared to other systems: lower costs of conductor materials for the construction of power transmission lines; three-phase generators and transformers have better economic indicators; thanks to the three-phase system, a rotating magnetic field is created relatively simply, which is used in simple, reliable and cheap

asynchronous motors; a three-phase four-wire system allows for two operating voltages.

Scientists and engineers from different countries made a great contribution to the development of three-phase systems: Serbian – N. Tesla, Russian – M.O. Dolivo-Dobrovolsky, German – F. Haselwander, French – M. Depres, American – C. Bradley.

This is one of the convincing examples when the historical conditioning of the most important technical and economic problems has the international nature of their solution.

The founder of three-phase systems is the Russian electrical engineer M.O. Dolivo-Dobrovolsky, who created three-phase asynchronous motors, transformers, and developed three-wire and four-wire power transmission lines.

A convincing demonstration of the advantages of three-phase circuits was the famous Laufen-Frankfurt power transmission line (1891, length 170 km, voltage $U = 15$ kV, efficiency $\eta = 75\%$), in the construction of which he took an active part.

M.O. Dolivo-Dobrovolsky. Since that time, the rapid development of electrification has begun.

At power plants, a three-phase EMF system is created by three-phase synchronous generators, the operating principle and design of which will be considered later (chapter 10).

The model of a three-phase generator is schematically shown in Fig. 2.7.7. The generator winding is located on the stator and consists of three phases, each of which is represented by two turns. The axes of the phase turns are offset relative to each other by an angle of 120^0.

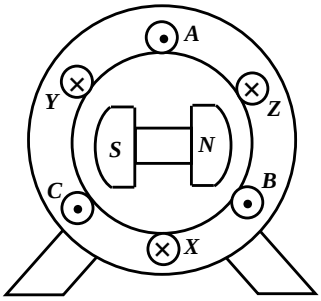

Figure 2.7.7 – Simplified model of a three-phase synchronous generator

The beginnings of the phases are marked A, B, C, and the ends - X, Y, Z. The rotor is an electromagnet excited by a direct current. When the rotor rotates, the magnetic field created by it rotates simultaneously, which induces in the stator windings EMFs, which have the same amplitude and are shifted in phase relative to each other by an angle of 120^0. Such an EMF system is called symmetrical (a sign of an asymmetrical three-phase EMF system is inequality of amplitudes or inequality of shift angles).

If the EMF of one phase (for example, phase A) is taken as the initial one and its initial phase is considered to be equal to zero, then the expressions for the instantaneous values of the EMF can be written in the form:

$$e_A = E_m \sin \omega t;$$
$$e_B = E_m \sin(\omega t - 120^0);$$
$$e_C = E_m \sin\left(\omega t - 240^0\right) = E_m \sin\left(\omega t + 120^0\right). \qquad (2.7.9)$$

Fig. 2.7.8, a shows the graphs $e_A(t), e_B(t), e_C(t)$, and Fig. 2.7.8 b shows the vector diagram of the EMF on the complex plane.

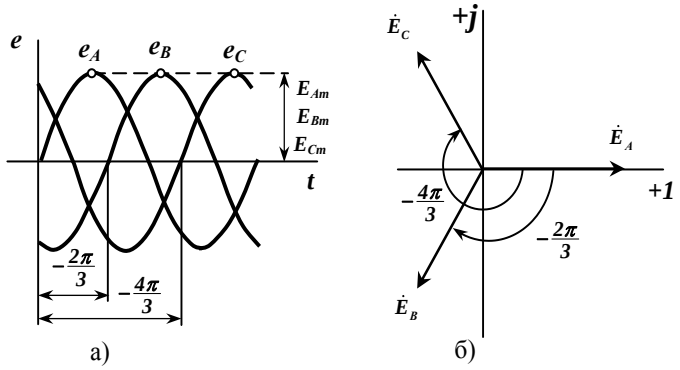

Figure 2.7.8 – Time (a) and vector (b) diagrams of the EMF of a three-phase generator

2.7.3 Main and auxiliary equipment

Main (primary) electrical equipment is the set of electrical systems and devices without which the operation of the vehicle is impossible (ensuring vehicle movement, engine operation, and the functioning of other vehicle components while meeting safety requirements). Such equipment is mandatory for every vehicle in accordance with technical regulations and traffic rules.

Auxiliary electrical equipment refers to electrical devices designed to facilitate vehicle control, provide comfort and convenience, or perform supporting functions, but are not critical for the vehicle's basic operation. These elements are typically included in standard or mid-level configurations. Examples include power windows, heated mirrors, interior lighting, and heater fans.

A separate category is additional electrical equipment. Additional electrical equipment includes devices that can be installed at the owner's or driver's discretion or are included in extended configurations (mid-range, premium, etc.). They must not negatively affect the safety or operability of the vehicle but should enhance functionality, convenience, aesthetics, or control. Examples include rear-view cameras, parking sensors, GPS trackers, additional lighting for specific vehicle areas, hi-fi audio systems, and adaptive lighting.

It is worth noting that increasing safety requirements and technological development lead to the appearance (or disappearance) of certain electrical equipment elements or their reclassification from one group to another (Fig. 2.7.9). For example, in classic literature, vehicle structural safety systems, horns, and windshield wipers can be found under auxiliary equipment. Moreover, some electrical components may belong to different subsystems. For instance, actuators for the horn, lighting and signaling systems, and body modules may be part of a vehicle's anti-theft security system.

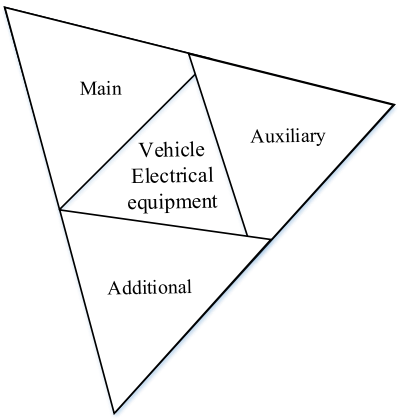

Figure 2.7.9 – Constituent components of the vehicle electrical equipment

Determining the value of a physical quantity experimentally using technical means is called measurement.

To perform the measurement, measuring instruments are required, which include:

- measures – technical means that serve to specifically reproduce a unit of physical quantity;
- measuring instruments – technical means used to carry out the measurement process;
- Measuring transducers – technical means that serve to expand the possibilities of using

measuring instruments (shunts, voltage dividers, transformers, amplifiers, converting devices for measuring non-electrical quantities, etc.).

Measures are measuring instruments designed to reproduce the physical quantity of a given size.

As a measure of constant EMF, normal cells are used - sealed, mercury-cadmium galvanic cells of special design. At a temperature, $+20^0 C$ they have an EMF of a value $1,0186 B$ that remains unchanged for decades.

Electrical resistance measures come in single-digit and multi-digit (resistance stores). A single-digit measure is a resistor of a special design made of manganin tape or manganin wire, depending on the value of the nominal resistance.

Manganin is an alloy that has a high resistivity that is practically independent of time, temperature, and frequency of alternating current. Each single-digit measurement represents one resistance value. The nominal resistance values are multiples of 10. A resistor bank is a set of manganin resistors mounted in one box so that the resistance values can be changed within certain limits using a switching device.

Inductance gauges are made of copper conductor wound on a porcelain or plastic frame, with inductance values from 10^{-9} to 10 *G*. Inductance magazines are a set of inductor coils. The switching device makes it possible to change the inductance of the magazine stepwise or smoothly.

Capacitance measures are manufactured in the form of capacitors with air or solid dielectric with corresponding capacities. Capacitance stores are equipped with capacitors with solid dielectric.

A measuring instrument designed to produce a signal of measurement information in a form accessible for direct perception is called a measuring instrument.

Devices designed to measure electrical quantities are called electrical measuring instruments. Without them, it is impossible to imagine the development of science and technology. The widespread use of electrical measuring instruments is explained by their advantages compared to other measuring instruments (high sensitivity, required accuracy, wide measurement range, the ability to automate measurement processes and measure parameters at a distance, the ability to measure non-electrical quantities by first converting them into electrical ones).

Measuring instruments are divided into electromechanical and electronic. Electromechanical instruments are divided into indicating instruments and comparison instruments.

An electrical measuring instrument that is graduated in units of the measured quantity and allows direct reading of it is called an indicating instrument (ammeters, voltmeters, wattmeters, etc.). An electrical measuring instrument that allows obtaining the numerical value of the measured quantity as a result of comparing it with a measure of this quantity is called a comparison instrument (measuring bridges, potentiometers, etc.).

Electrical measuring instruments are classified according to a number of characteristics: the quantity measured by the instrument, the type of current, operating conditions, resistance to mechanical action, accuracy class, operating principle, etc.

Depending on the measured quantity, electrical measuring instruments are divided into ammeters, voltmeters, wattmeters, phase meters, ohmmeters, frequency meters, etc. Pointer instruments on diagrams are indicated by a circle with a diameter of 10 mm, inside which is the designation of the instrument (Table 2.7.2).

The type of current indicates what current (direct or alternating) the device operates on.

Depending on the operating conditions, the devices are divided into three groups:

A – devices intended for operation in closed heated rooms; B – devices intended for operation in closed unheated rooms; C – devices for operation in field conditions.

According to their resistance to mechanical influences, devices are divided into ordinary, ordinary with increased strength (ZM), resistant to mechanical influences: shock-resistant (TM), vibration-resistant (VM), insensitive to shaking (TN), insensitive to vibration (VN), shock-resistant (UM).

Electrical measuring instruments are divided into analog and digital. Instruments in which the readings are a continuous function of the measured quantity are called analog instruments. Instruments that automatically generate discrete signals of the measured information and represent it in digital form are called digital instruments.

According to the method of outputting measured information, devices are divided into:

- indicating – direct evaluation devices that only allow readings on a pre-graded scale in units of the measured quantity;
- registering – registration of impressions is provided;
- self-recording – recording devices that provide for recording readings in the form of a

diagram;

- printing – recording devices with a device for printing readings in numerical form;
- integrating – the summed value is integrated over time or another independent variable;
- summative – the readings of which are related to the sum of several values supplied to the device through different channels.
- Tables 2.7.2 and 2.7.3 provide information on the units of electrical and magnetic quantities and their multiplicity.

Table 2.7.2 – Derived units of electric and magnetic quantities

Size	Unit	Marking	
		Ukrainian	International
Work, energy, amount of heat	joule	J	J
Power	watt	Tue	W
Amount of electricity	coulomb	Cl	C
Electrical voltage, difference EMF potentials	volt	IN	V
Electric field strength	voltmeter	In/m	V/m
Electrical resistance	Ohm	Ohm	Ω
Electrical capacity	farad	F	F
Manite induction flow	weber	Wb	Wb
Inductance and mutual inductance	Henry	Mr.	H
Magnetic induction	Tesla	Tl	T
Magnetic field strength	ampere/m	Car	A/m
Magnetomotive force	ampere	AND	A
Frequency	hertz	Hz	Hz

Table 2.7.3 – Multiples of units created using prefixes

Prefix	Relation. to the basics. units	Marking		Prefix	Relation. to the basics. units	Marking Ukrainian	
		Ukraine Yin	International native			Ukraine Yin	International native
ato	10^{-18}	and	a	deck	10	yes	yes
fento	10^{-15}	f	f	hecto	10^{2}	g	h
picot	10^{-12}	n	p	kilo	10^{3}	k	k
nano	10^{-9}	n	n	mega	10^{6}	M	M
micro	10^{-6}	mk	μ	giga	10^{9}	G	G
milli	10^{-3}	m	m	tera	10^{12}	T	T
Santas	10^{-2}	with	c	pet	10^{15}	P	p
children	10^{-1}	d	d	exa	10^{18}	there are	THERE ARE

For a long time, only direct, analog connections were used in car systems between different electrical components. The signal, in this case a voltage, was sent to the ECU and received directly by it. Thus, the sensor and the signal receiver were links in the same electronic circuit.

In order to reduce susceptibility to interference and eliminate problems in signal processing, pulse-width modulation was introduced.

Pulse width modulation is the transmission of parameters as a signal pulse lasting a certain time at specified, constantly repeating intervals in time. This avoids signal changes due to resistance and interference. The signal value is encoded as a switching moment during a certain, constantly repeating time interval. The electrical wire connected to the ECU no longer has to transmit the exact characteristics of the signal, but only switches on and off. The longer it is energized, the higher the value transmitted becomes. A

feature of modern technology is digital, binary signal transmission. An analog-to-digital converter converts the signal value into a digital code. The accuracy of the conversion depends on the number of binary digits, so-called bits, used. The electrical wire connected to the ECU is switched on and off in a faster sequence in order to transmit the digital code. This code can now be easily stored and transmitted to other ECUs in the vehicle.

Coded digital signals can be easily and losslessly transmitted to other control units. The control units do not need to be connected to each other. Instead, a principle that has long been used in switchboards is used. The current-carrying bus in them supplies the electrical components with the necessary voltage. The electrical components, figuratively speaking, simply “snap” onto the bus, just as, for example, passengers on a bus sit in the free seats. Such a current-carrying bus can also be used to distribute digital information. This connection is referred to as “Bus”, from the English “Bus-Bar” - “current-carrying bus”. In general, a “Bus” is a wiring system with corresponding control elements. It serves to exchange data between electronic components.

Until recently, in control systems, each piece of information was transmitted over its own wire. Thus, with each additional piece of information, the number of wires and the number of contacts on the control unit connectors increased. Therefore, this type of information transmission is justified only in the case of a limited amount of transmitted data.

To solve the problem of exchanging a large amount of information, an optimal technical solution was needed, in which electronic and electrical systems would remain convenient for visual observation and, at the same time, would not take up too much space. Modern cars have a very complex network structure that provides data transmission between different control units. The control unit data provides information from various vehicle systems where various types of sensors are installed. By purpose, sensors are classified by the type of control non-electrical influence: extreme position sensors, angular and linear displacement sensors, frequency and speed sensors, pressure sensors, temperature sensors, humidity sensors, oxygen concentration sensors, radiation sensors, etc.

Sensors are connected to the control unit or display devices to transmit information about the parameters of the controlled environment. In automotive systems, price and reliability are of great importance and, other things being equal, sensors with the fewest number of connectors are always chosen. If 5-6 wires are connected to the sensor, it is advisable to place the signal processing chip directly on the sensor and transmit data to the controller via a serial interface.

When connecting sensors to the ECU, it should be borne in mind that the vehicle chassis cannot be used as a measuring ground. Between the point of connection of the ECU to the ground and the sensor, the voltage can drop to 1 V due to power currents on the "ground", which is unacceptable both during normal operation of the sensor and during its diagnostics.

Main types of car sensors

The inductive type crankshaft speed (position) sensor is designed to determine the speed, angular position of the engine crankshaft and synchronize the operation of the electronic control unit. The signals from the sensor are used by the engine control system to determine the fuel injection timing, the amount of fuel injected, the ignition timing, and the camshaft rotation angle during the operation of the variable valve timing system.

The sensor is made in the form of an induction coil with a magnetized core (Fig. 2.7.10). In such a control system, a sensor is used, the active electrical resistance of the winding of which is 390 Ohm. The sensor is attached to the engine using a bracket.

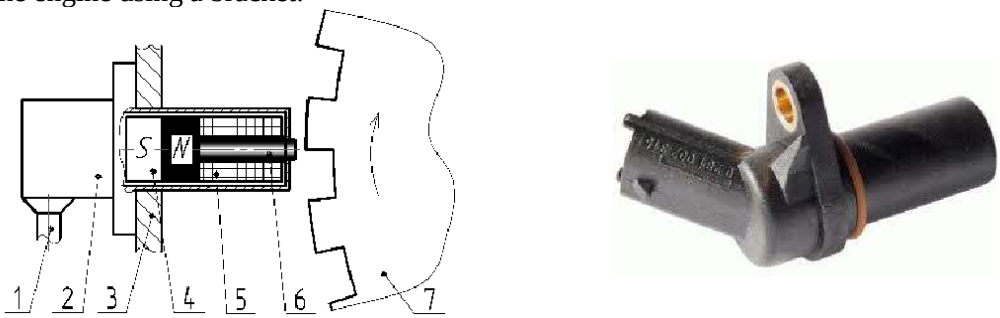

Figure 2.7.10 – Structure of the crankshaft speed sensor
1 – electric cable; 2 – sensor housing; 3 – motor housing; 4 – permanent magnet; 5 – winding; 6 – core; 7 – setting disk

The sensor's operation is based on the phenomenon of electromagnetic induction. When the teeth of the ferromagnetic driving disk located on the engine flywheel pass relative to the magnetized core, the magnetic flux penetrating the turns of the sensor coil changes, and an EMF is induced in the sensor coil. The output signal is a sequence of bipolar electrical pulses.

Two peak-shaped half-waves of the pulse are located symmetrically about the axis passing through the zero point, and the zero point corresponds to the center of each tooth. The amplitude of the output signal depends on the rate of change of the magnetic flux (angular velocity of the driving disk), the size of the gap between the sensor core and the driving disk from the design parameters. The frequency of the output signal of the sensor depends on the angular velocity of the driving disk, i.e., the crankshaft.

The teeth on the setting disk are arranged in increments of 6°. With such a step, 60 teeth are placed on the disk, but two teeth are missing to create a synchronization mark, which is the starting point for the control system, which ensures synchronization of the functioning of the control system with the working process of the engine. The tooth number on the disk is counted from the synchronization mark in the direction of disk rotation. When the middle of the first tooth of the synchronization disk is aligned with the axis of the sensor, the engine crankshaft is in a position of 120° (20 teeth) to the top dead center of the first and fourth cylinders.

The inductive crankshaft speed sensor has a two-wire connection to the control unit.

The camshaft position sensor (phase sensor) is designed to determine the top dead center in the first cylinder at the end of the compression stroke, which ensures precise synchronization of the ECU operation with the engine's operating process.

The principle of operation of the phase sensor is based on the Hall effect. The Hall effect is the occurrence of a potential difference in a conductor or semiconductor through which an electric current passes when they are moved into a magnetic field perpendicular to the direction of the current. If a rectangular semiconductor plate, to two parallel faces of which a voltage is applied and an electric current passes, is affected by a magnetic field whose intensity is perpendicular to the passing current, then a Hall voltage appears on the other two parallel faces, the magnitude of the latter being proportional to the magnitude of the current and the magnetic field strength (Fig. 2.7.11).

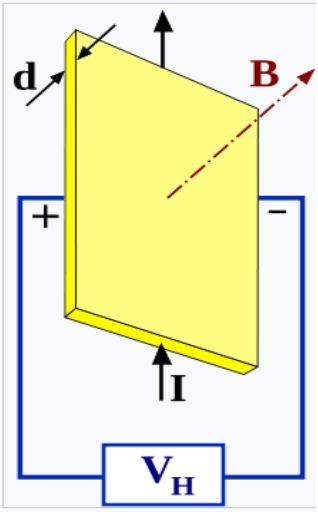

Figure 2.7.11 - Hall effect

The structure of the phase sensor is shown in Figure 2.7.12. The sensor housing contains an integrated Hall circuit, a permanent magnet, and an electrical connector. The integrated Hall circuit is located between the setting disk and the permanent magnet, which creates a magnetic field, the magnetic induction vector of which is perpendicular to the Hall element. The disk is mounted on the camshaft.

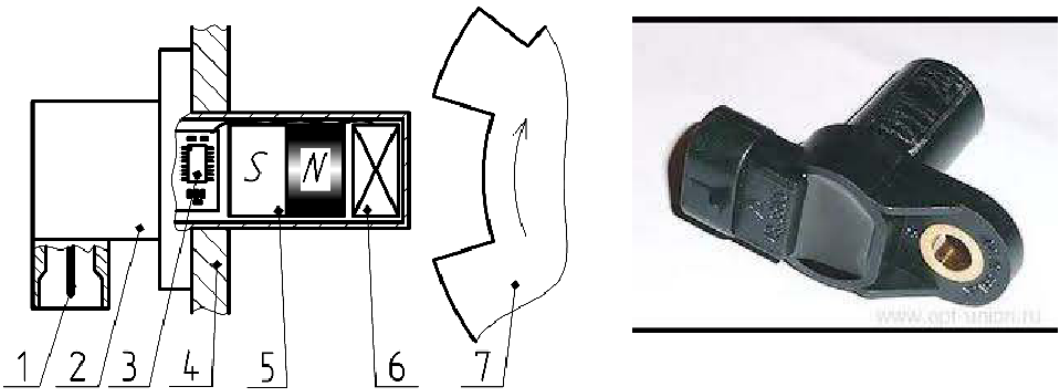

Figure 2.7.12 – Structure of the phase sensor

When the tooth of the driving disk passes the Hall element, the magnetic field strength changes, and the Hall voltage changes accordingly. The change in the Hall voltage is converted by the built-in integrated circuit into a signal in the form of rectangular pulses (Fig. 2.7.13).

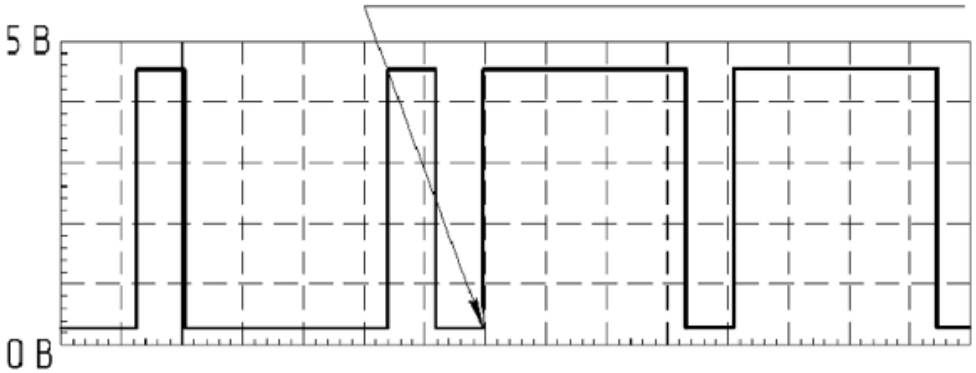

Figure 2.7.13 – Phase sensor signal

The frequency of the phase sensor output signal depends on the camshaft (timing disk) rotation frequency. The signal amplitude does not depend on the camshaft (timing disk) rotation frequency.

The number of pulses per one camshaft revolution and their duration depend on the design of the setting disk. In this control system, a setting disk with four teeth is installed on the camshaft, with the width of one pair of teeth being greater than the width of the other pair (Fig. 2.7.14). As a result, during engine operation, a periodically repeating series of pulses is sent from the phase sensor to the ECU.



Figure 2.7.14 – Phase sensor drive device

For the operation of the Hall effect phase sensor, an external DC source is required. The sensor is powered from the ECU, the supply voltage is 5 V.

The phase sensor has a three-wire connection to the control unit: one of the conductors is responsible for power, the second for signal, and the third for common ("ground").

Absolute pressure sensor in the intake manifold. Information about the absolute pressure in the intake manifold is necessary to calculate the amount of air entering the engine cylinder. The sensor is based on the strain-resistive effect: a change in the resistance of the conductor due to its deformation. The structure of the

sensor is shown in Figure 2.7.15. The sensor housing contains a sensitive element - a membrane made of a silicon plate, four strain-resistors are made on the membrane by ion implantation, forming an electrical pad. On one side of the membrane is a cavity from which air is pumped out, on the opposite side of the membrane is a cavity connected to the exhaust manifold.

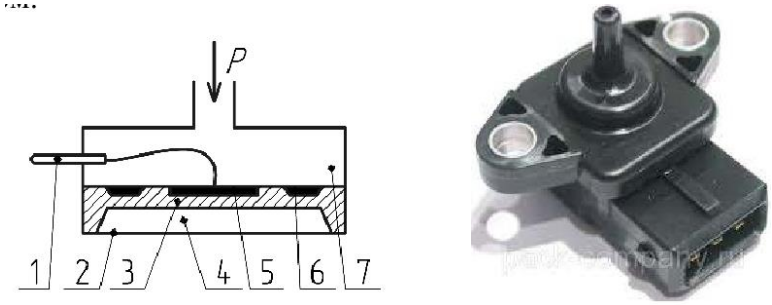

Figure 2.7.15 – Structure of an absolute pressure sensor

An external power source is connected to one of the diagonals of the electric bridge. The pressure acting on the membrane is deformed, and the strain gauges are deformed together with it, while their resistance changes. When the bridge is unbalanced, a voltage appears in the measuring diagonal of the bridge, which is amplified by the built-in electronic circuit (Fig. 2.7.16).

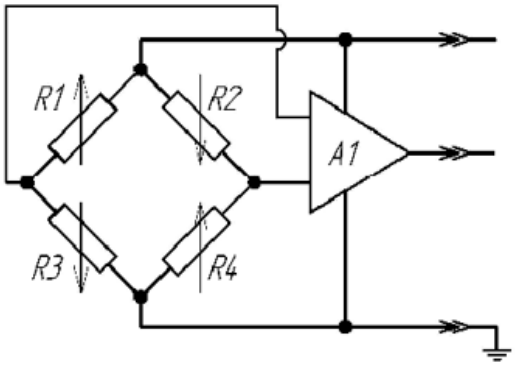

Figure 2.7.16 – Electrical diagram of the absolute pressure sensor

The absolute pressure sensor requires an external DC source to operate; in this case, the sensor is powered from the ECU, the supply voltage is 5 V. The voltage on the signal wire of the absolute pressure sensor is proportional to the air pressure in the intake manifold.

The absolute pressure sensor in the intake manifold has a three-wire connection to the control unit, one of the conductors is intended for power, the second for signal, and the third for common ("ground").

Temperature sensors. To adjust the fuel delivery parameters and ignition advance angle, information about the temperature of the coolant and the temperature of the air in the intake manifold is required, this information comes from the corresponding temperature sensors.

The engine coolant temperature sensor is installed in its flow and, as a rule, on the outlet pipe of the cooling jacket on the cylinder head.

The air temperature sensor is installed in the air flow entering the engine cylinders between the air filter and the motorized throttle body.

The coolant and air inlet temperature sensors are based on semiconductor thermistors (thermistors) with a negative temperature coefficient (NTC), i.e. the electrical resistance of the thermistor decreases with increasing temperature. The design of the coolant temperature sensor is shown in Figure 2.7.17.

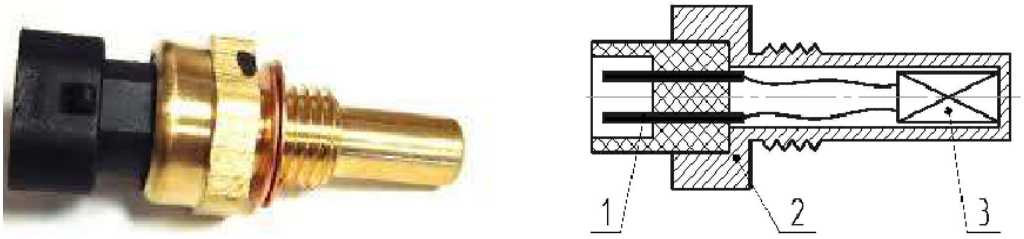

Figure 2.7.17 – Structure of the coolant temperature sensor
1 – electrical contact; 2 – housing; 3 – semiconductor thermistor

A semiconductor thermistor (thermistor) is mounted in the sensor housing. The air inlet temperature sensor has a practically similar design. At low temperatures, the thermistor has high resistance, and at high temperatures - low. The calibration characteristics of the coolant and air inlet temperature sensors are shown in Figure 2.7.18 a, b.

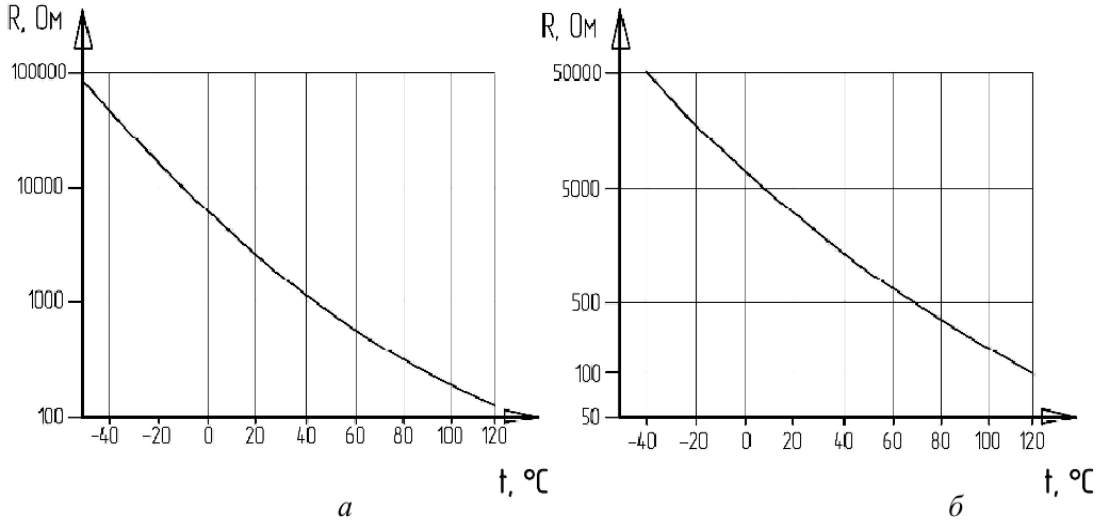

Figure 2.7.18 – Calibration characteristics of temperature sensors
a – coolant; b – air intake

Temperature sensors have a two-wire connection scheme to the control unit (Fig. 2.7.19).

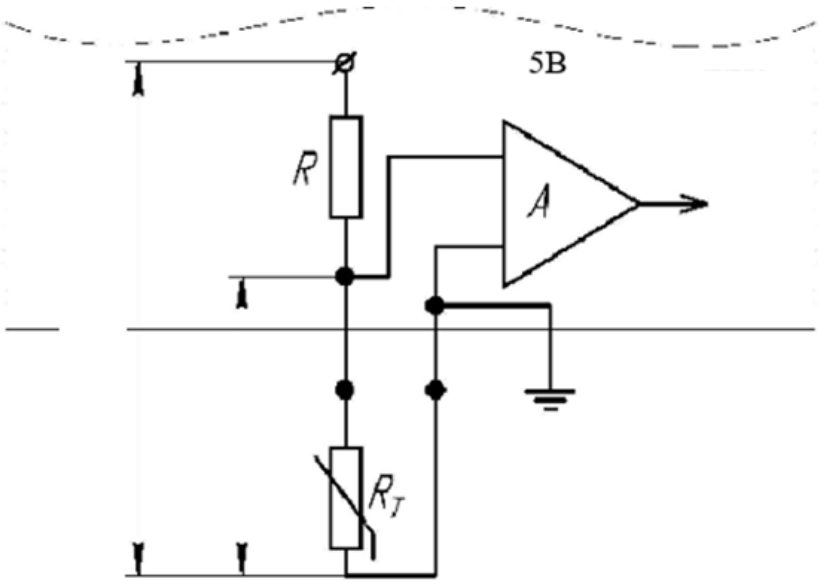

Figure 2.7.19 – Electrical diagram of temperature sensor connection
R – constant resistance; RT – thermistor of the temperature sensor; A – ECU signal processing circuit

The thermistor is connected in series to a constant resistance located in the ECU. The output of the constant resistance is supplied with a voltage of 5 V. In turn, the free output of the thermistor is connected to the "ground" of the ECU.

The voltage at the point of connection of the thermistor to the resistor in the control unit (voltage drop across the thermistor) depends on the ratio of the resistances of the resistor and thermistor. When the temperature of the controlled environment increases, the voltage decreases and vice versa. The voltage is supplied to the analog-to-digital converter of the control unit and is a measure of the temperature of the environment in which the sensor is placed.

There is a potentiometer sensor on the accelerator pedal, the output of which provides information about its position to the electronic control unit. Based on information about the position of the accelerator pedal, taking into account information received from other sensors, the control unit determines the desired position of the throttle valve at a given time, and a corresponding control signal is sent to the throttle actuator located in the control module to rotate it. The throttle control module contains a potentiometer sensor, the output of which provides information about the current position of the throttle valve to the control unit, i.e., constant feedback is provided - control of the position of the valve.

The reliability of the signals of the accelerator pedal and throttle valve position sensors is subject to very strict requirements, therefore, dual potentiometers are used in the designs of these sensors. A method of increasing the reliability of technical devices is used - hot (loaded) redundancy. The accelerator pedal position sensor is located in the pedal module, the location and device of the sensor are shown in Figure 2.7.20. In this figure, 1 is the accelerator pedal, 2 is the resistive tracks, 3 is the moving contacts.

The axis of the accelerator pedal lever is connected to the motor of a dual potentiometer with moving contacts - current collectors. The moving contacts come into contact with resistive tracks. When the accelerator pedal position changes, the motor position changes, the moving contacts slide along the surface of the resistive track, and the electrical resistance between the moving contacts (middle outputs) and the extreme outputs of the potentiometers changes accordingly.

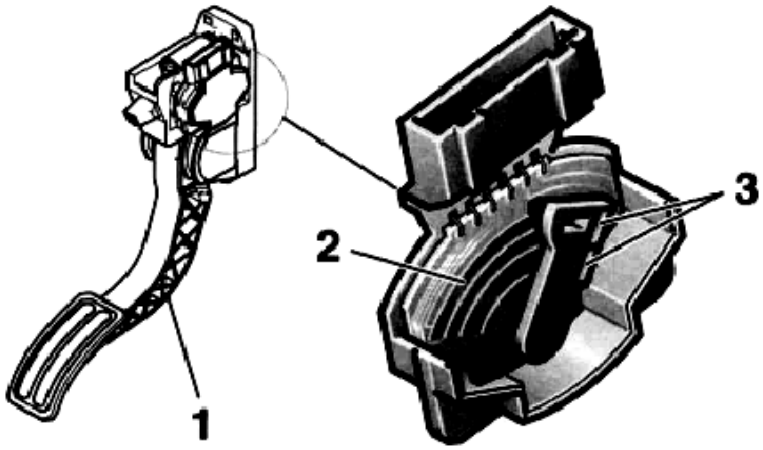

Figure 2.7.20 – Location and arrangement of the accelerator pedal position sensor

One of the extreme outputs of each potentiometer is connected to the ground of the control unit, the other extreme output is connected to the reference voltage source U = +5. When the pedal position changes, the voltage at the middle outputs of the potentiometers U1 and U2 changes. Signals from the middle outputs of the dual potentiometer, which carry information about the position of the accelerator pedal, are sent to the control unit.

The knock sensor is used to detect the presence of detonation combustion during engine operation. The operating principle of the knock sensor is based on the piezoelectric effect. This control system uses a broadband type knock sensor, which is installed on the engine cylinder block. It detects vibrations coming from the walls of the cylinder block. The knock sensor device is shown in Figure 2.7.21.

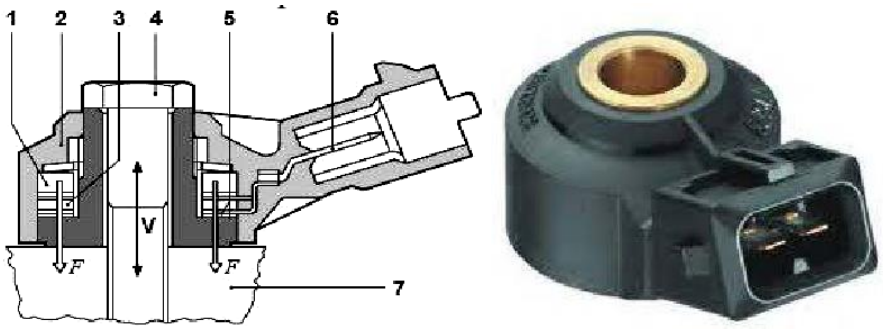

Figure 2.7.21 – Structure of the knock sensor
1 – seismic mass (washer); 2 – housing; 3 – piezoceramic element; 4 – mounting bolt; 5 – bushing; 6 – fork; V – oscillation; F – inertia force

The sensitive element of the knock sensor is a quartz piezoelectric element, which, when the engine is running, perceives the vibration that occurs due to the inertial mass of the sensor. As a result, an electrical signal of voltage fluctuations appears on its plates due to the piezoelectric effect. The greater the amplitude and frequency of the cylinder block oscillations, the higher the voltage. During detonation combustion of the fuel-air mixture, the amplitude of vibrations of the engine cylinder block increases, which causes an increase in the amplitude of the voltage of the sensor.

In a modern car, the problems of neutralizing toxic substances in exhaust gases are solved by using special neutralizers. These devices work most effectively in conjunction with a gasoline injection system, which is equipped with oxygen concentration sensors in the engine exhaust tract. The control system uses two identical binary oxygen sensors based on zirconium dioxide: the first is a control sensor, installed in the exhaust tract before the catalytic converter; the second is a diagnostic sensor, installed after the converter (Fig. 2.7.22).

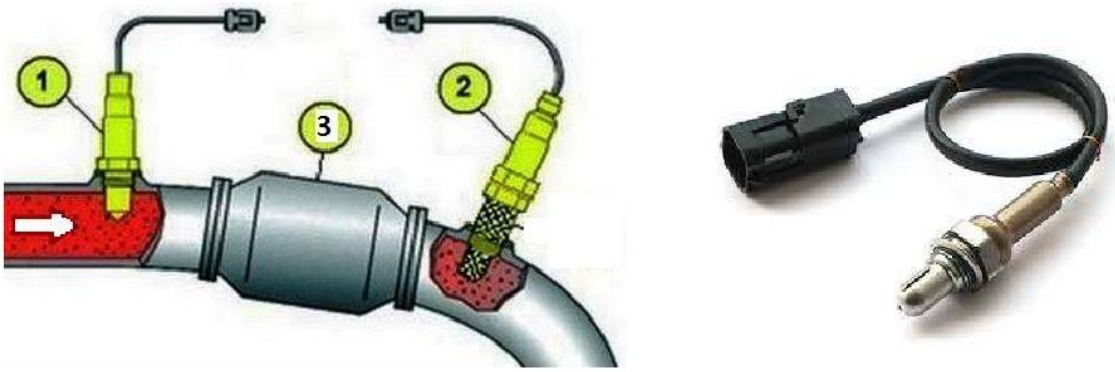

Figure 2.7.22 – Location of oxygen sensors in the engine exhaust tract
1,2 – respectively, regulatory and diagnostic oxygen sensors; 3 – catalytic converter

The oxygen sensor is designed to determine the concentration of oxygen in the exhaust gases. The use of an oxygen sensor allows you to control the fuel supply in a closed loop with feedback in order to maintain the stoichiometric composition of the mixture, at which the catalytic converter operates most efficiently.

The oxygen sensor produces a feedback signal for the electronic injection control unit, which adjusts the composition of the fuel-air mixture depending on the oxygen concentration in the exhaust gases. The adjustment is implemented by changing the duration of gasoline injection by the injectors.

The diagnostic oxygen sensor produces a signal that is used to evaluate the efficiency of the catalytic converter.

The general design of the oxygen sensor is shown in Figure 2.7.23. The oxygen sensor is a galvanic cell with a solid electrolyte. This sensor has two electrodes: external and internal. Both electrodes are made of porous platinum or its alloy and are separated by a layer of solid electrolyte, which is zirconium dioxide ZrO_2 with the addition of yttrium oxide Y_2O_3 to increase the ionic conductivity of the electrolyte. The external electrode is washed by a flow of exhaust gases in the engine exhaust system with a variable partial pressure of oxygen. The medium in contact with the internal electrode has a constant partial pressure of oxygen.

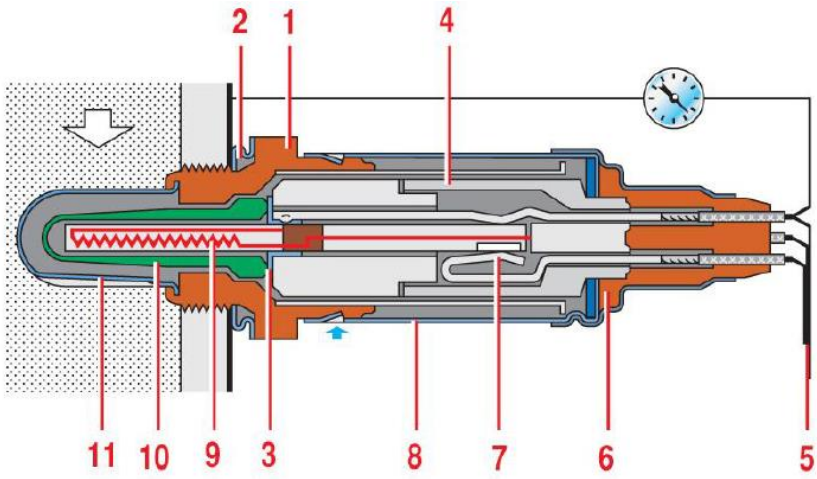

Figure 2.7.23 – Oxygen sensor design

When heated to a certain temperature (more than 350 °C), zirconium dioxide acquires the properties of an electrolyte, and a potential difference arises between the electrodes of the sensor due to the movement of ions in the solid electrolyte, caused by the difference in partial pressures of oxygen inside the sensor and in the exhaust gases.

At a low level of partial pressure of oxygen in the exhaust gases, when the engine is operating on an enriched mixture ($\lambda < 1$), the sensor acts as a galvanic element that generates a high voltage (700 - 1000 mV). When switching to a lean mixture ($\lambda > 1$), the partial pressure of oxygen in the exhaust gases increases significantly, which leads to a sharp drop in the voltage at the sensor output to 50-100 mV. Such a sharp drop in the voltage at the sensor output when switching from enriched to lean mixtures allows you to determine the stoichiometric composition of the mixture with high accuracy.

The output voltage of the oxygen sensor depends on the temperature. To maintain the required temperature, an electric heating element is integrated into the design of the oxygen sensor. During operation, the ECU regulates the power of the heating element in order to maintain the required temperature of the sensing element. A constant reference voltage Uop = 450 mV is supplied from the ECU to the signal output of the oxygen sensor. If the sensor is not warmed up, then only the reference voltage will be present at its signal output. As the sensor warms up, its internal resistance decreases, and it begins to generate a voltage, the magnitude of which depends on the composition of the fuel-air mixture. The generated voltage overlaps the reference voltage. The ECU perceives a change in the voltage in the circuit of the regulating oxygen sensor as a signal about the possibility of switching to the closed-loop fuel supply control mode.

When the control system is operating in closed-loop mode, the output voltage of the oxygen sensor periodically changes between low and high levels. The frequency of oscillation of the sensor output voltage is in the range of 0.5-4 Hz. In this case, in the case of normal operation of the catalytic converter, the output voltage of the diagnostic sensor is practically at a constant level.

2.7.4 Energy supply systems

Vehicle energy (power) supply systems are a set of subsystems and components that ensure the generation, storage, delivery, and distribution of electrical energy to the vehicle's electrical consumers. The power supply system is a critically important part of the vehicle's electrical equipment, ensuring the functionality of the vehicle.

The main elements of a conventional vehicle power supply system are the sources of electrical energy that generate (or store) the vehicle's electricity: the alternator unit and the battery. The joint operation of subsystems and the matching of their component characteristics encourage an integrated consideration of the power supply and starting systems (Fig. 2.7.24.). For example, the alternator's output must be sufficient to charge the battery, which in turn must have the characteristics necessary for electric starter ignition of the internal combustion engine (ICE). In some vehicles, an electric machine can be used in both generator and starter modes.

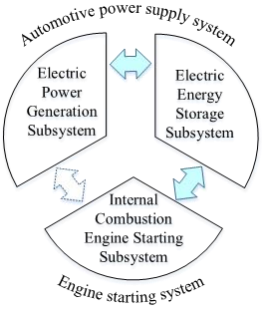

Figure 2.7.24 – Vehicle power supply and internal combustion engine starting system

A modern vehicle includes subsystems for generating and storing electrical energy, subsystems for distributing and transmitting electrical energy, and subsystems for protecting the electrical network.

Control, diagnostics, and monitoring subsystems of the power supply are primarily intended to optimize energy consumption and battery charging.

A separate category includes subsystems designed to improve the vehicle's energy efficiency (regenerative braking systems, thermoelectric modules, photovoltaic modules, etc.).

The engine and vehicle electrical system consists of a generator and a battery connected in parallel to each other. Its main diagnostic parameters are: generator voltage under load, generator belt tension, and battery discharge level.

To determine these parameters under operating conditions, general-purpose electrical measuring instruments (voltmeters, ammeters) can be used, however, special instruments are more often used, especially for engines with microprocessor control systems.

In cars, as a rule, a single-wire electrical circuit is used. The negative terminal of the power sources and some consumers is brought to the "ground" of the car, which performs the function of the second wire. To connect the wires to each other, as well as to connect them to the devices of the electrical equipment system, the wires have plugs that are installed in the blocks and protected from corrosion and mechanical damage by rubber covers.

The simplest battery (Fig. 2.7.25) consists of two plates placed in a case (sometimes called a jar), this case must be filled with a sulfuric acid solution (electrolyte) and closed on top with a lid. The lid must have holes through which two leads from each plate are output.

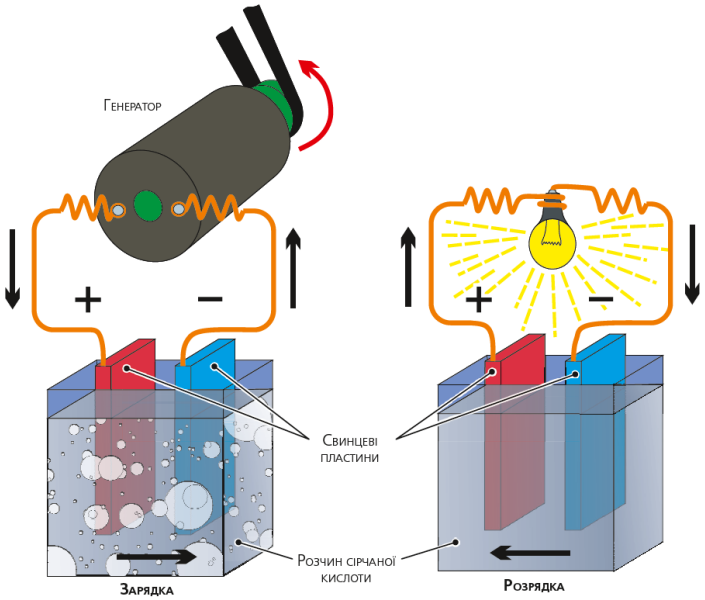

Figure 2.7.25 – The principle of operation of the simplest rechargeable battery [1]

In the battery, chemical energy is converted into electrical energy (two lead plates are placed in a sulfuric acid solution, and conductors from the generator are connected to their terminals, respectively, while the battery is charging, it is a current consumer). In this case, electrical energy has been converted into

chemical energy - the battery is charged. The advantages of this design are that the charging and discharging processes can be performed repeatedly. And if you follow the basic rules for operating the battery, it can last quite a long time.

Any industrial battery consists of several (usually six) simple batteries, as described above. Since the on-board network of a passenger car is designed for 12 V, the battery must produce the same amount. One bank (two plates) provides a voltage of approximately 2 V. To obtain 12 V, the positive and negative plates must be connected in series and two common terminals must be made - positive and negative (Fig. 2.7.26) [1].

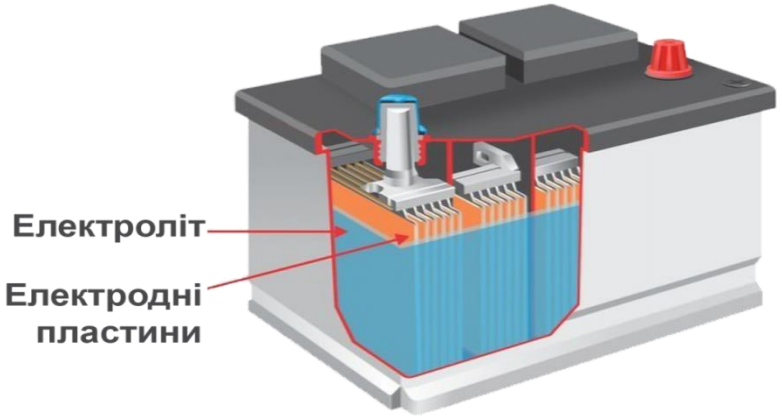

Figure 2.7.26 – Structure of a lead-acid battery

Recently, technologies have advanced quite rapidly. The energy storage industry is also not left behind and has a significant range of uninterruptible power systems and batteries, but due to the great variety, it is quite difficult to understand what exactly a battery is and what its main advantages and disadvantages are.

The lead-acid type of battery is the oldest in the context of other common battery types. The technology was developed by the famous French physicist Gaston Plante back in 1859. Lead-acid batteries impress with their versatility and relatively affordable cost, they are used in various types of vehicles, autonomous or backup power supply systems, etc.

Lead-acid batteries consist of plates made of lead, lead dioxide, and an electrolyte – a solution of sulfuric acid (H_2SO_4).

The advantages of lead-acid batteries include low cost, high operating currents, low self-discharge, a wide range of operating temperatures, and fairly high efficiency (80-90%).

The disadvantages of lead-acid batteries include large dimensions and weight, high risks of overheating if charged incorrectly, sensitivity to deep discharges, sensitivity to subzero temperatures, a small number of charge-discharge cycles, and a low level of safety.

"VRLA (SLA) batteries are essentially an improved technology of lead-acid batteries. This type of battery has a sealed case with a special valve for releasing excess pressure. Instead of liquid electrolyte, the batteries use an absorbent glass mat (AGM) or gel cell (GEL). Unlike lead-acid batteries, VRLA (SLA) technology does not require regular maintenance and electrolyte topping up; in addition, AGM and GEL batteries can be installed in any orientation, while acid batteries must be strictly in a vertical position to avoid electrolyte spillage."

AGM batteries are similar to WET batteries, the main difference is that the electrolyte is in an absorbent glass mat, and not in a liquid state, thanks to this solution, such batteries can be used even lying down. Between the positive and negative plates there is a sponge soaked in electrolyte, which in turn holds the electrolyte in its pores. All the small pores of the absorbent glass mat are filled with electrolyte, and the large pores serve to recirculate the gases formed as a result of prolonged operation of such a battery.

The advantages of AGM batteries include that they have a sealed design, do not require constant maintenance, long service life (5-12 years), long storage life (up to 3 years) without significant loss of capacity when turned over, the electrolyte does not leak out, but is in an absorbent glass mat, high recoil current (1.5 times greater than conventional acid batteries) and fast charging, resistant to deep discharges 200 full discharges; 500 discharges at 50% discharge; about 1,000 cycles at 20-30% discharge [2].

Disadvantages of AGM batteries are also present, namely: large dimensions and weight, high cost compared to lead-acid batteries, sensitive to overcharging and short circuits, and require special chargers.

“Gel-type batteries (GEL) belong to VRLA technology (Fig. 2.7.27). GEL batteries are quite similar to

the AGM type. Gel batteries use a substance based on liquid electrolyte and silicon dioxide (SiO2), which forms a thick mass similar to a gel. This mass fills the space between the plates, and as a result of chemical reactions in the gel, numerous gas bubbles are formed. Due to the fact that the electrolyte is in a thick state, it is less prone to decomposition of water and acid components, due to which the batteries better withstand poor charge currents.

Unlike AGM technology, gel batteries are better restored after deep discharges. Gel batteries are able to withstand more than 1,000 deep discharge cycles, which is why they are widely used in backup and autonomous power supply systems" [2].



Figure 2.7.27 – Gel battery in section [2]

The advantages of Gel batteries are that they do not require maintenance, no electrolyte evaporation, installation in any position without electrolyte spills, long service life (6-10 years), resistance to deep discharges, and a large number of discharge-charge cycles.

The disadvantages of Gel batteries include their high cost and sensitivity to overcharging.

Li-ion batteries are currently the most technologically advanced and perfect in comparison with WET, VRLA, AMG or GEL types. Lithium batteries are characterized by a significant energy reserve, with small dimensions and weight. Batteries have the best ratio of capacity to body size, due to which li-ion batteries make it possible to create powerful batteries with minimal dimensions and weight. This type of battery is used in devices with a significant large, or where there is a requirement for maximum battery life.

However, despite the significant advantages, these batteries are quite demanding and require special care and monitoring. One of the most important components of lithium-ion batteries is the BMS controller (Fig. 2.7.28), which controls the charging and discharging process, analyzes the state of all components, measures temperature, voltage, resistance and other indicators. In addition, the BMS board distributes and balances currents between the battery components.

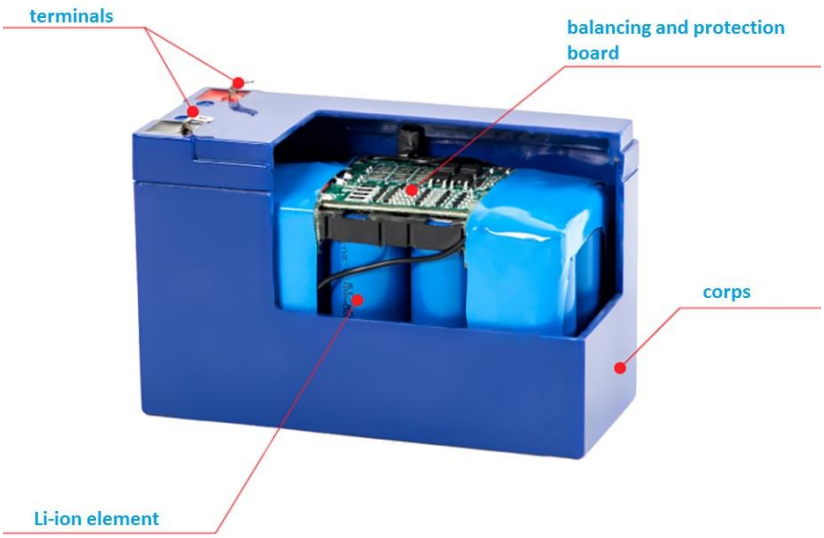

Figure 2.7.28 – Structure of a Li-ion battery

The advantages of Li-ion batteries are as follows: low self-discharge, high capacity, high operating currents, small size and weight, high charge-discharge cyclicity, no memory effect, maintenance-free, wide operating temperature range from -20 to +50.

The disadvantages of Li-ion batteries include the fact that they critically tolerate excessive charges and full discharges, are explosive if the case is damaged, and have difficulty charging at low temperatures.

The charging algorithm determines how the battery should be charged: what voltages and currents should be maintained and for how long. Thanks to the charging algorithms and the principles underlying them, the following is ensured: charging speed, safety, maximum preservation of battery life, and slowing down aging.

Lead sulfates have formed during the battery discharge process. To restore the battery's charge level and capacity, it is necessary to convert as much lead sulfate as possible into lead at the cathode and lead oxide at the anode.

If the voltage applied is insufficient, the current flowing through the battery will be too low and the charge will proceed very slowly. As a result, the destruction of lead sulfates formed during discharge will not occur and the battery capacity will not be restored.

With an increased charge voltage, the rate of chemical reactions and the magnitude of the current increase, and, consequently, the temperature of the battery increases. Towards the end of the charge, the process of water electrolysis begins to prevail and the so-called boiling of the battery electrolyte occurs due to the release of oxygen and hydrogen. This is dangerous for the following reasons: there is a risk of explosion of the released hydrogen, the loss of water in the battery will lead to a decrease in the density of the electrolyte and a decrease in the battery life. Therefore, it is very important to maintain the required level of current and voltage when charging the battery.

The charging method for a particular battery is determined by its manufacturer. The most common charging methods are: U, IU, IUI.

The U method is the simplest charging method (Fig. 2.7.29). The voltage in the charging mode does not differ from the trickle charge mode. Typically, the trickle charge voltage is 2.25 V/cell. If the battery consists of 17 12 V batteries, the total battery voltage must be maintained at 230 V. The charging current in the U method is limited to 10-30% of the battery capacity.

At the beginning of the charge, the battery has a low voltage and consumes a large current, so the charger limits it. Then the battery charge level increases and the voltage increases. As soon as the voltage reaches the set value, the charger begins to stabilize the voltage. The battery continues to charge with a constant voltage and the current consumed gradually decreases. As soon as the current consumed by the battery becomes small, the battery is considered charged.

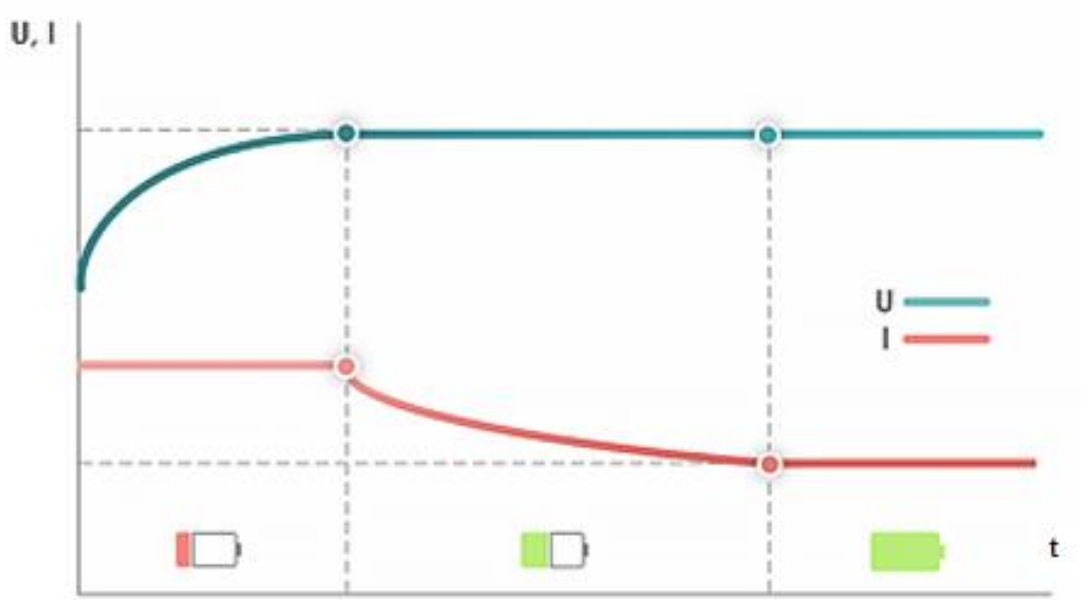

Figure 2.7.29 – U charge method [3]

The IU method (Fig. 2.7.30) differs from the U method in the increased voltage in the charging mode. This increases the battery charging speed and leads to more efficient destruction of lead sulfates, but it is

important to follow the manufacturer's recommendations to avoid damaging the battery (Fig. 2.7.31).

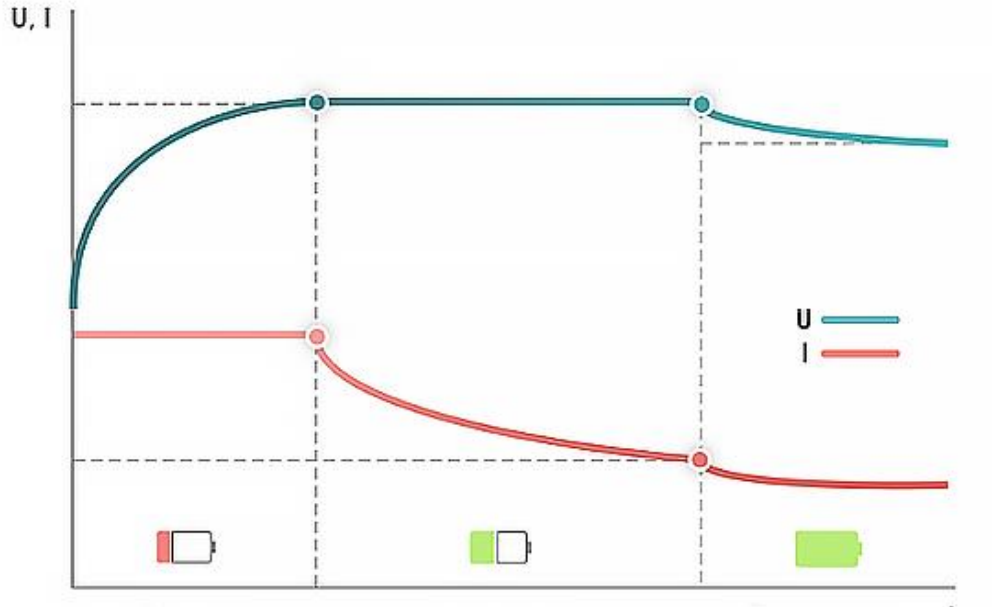

Figure 2.7.30 – UI charging method [3]

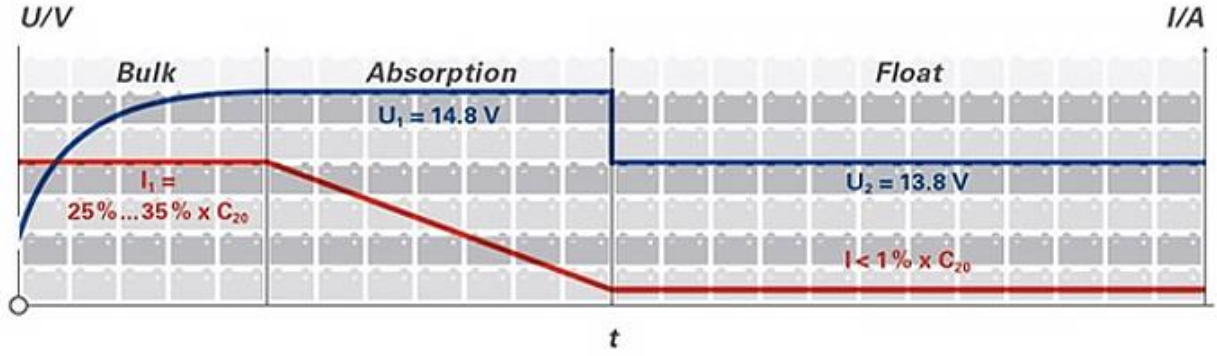

Figure 2.7.31 – Recommendations for charging batteries manufactured using AGM technology

In the IUI method (Fig. 2.7.32), a third additional stage is added, which is called the equalization stage. In this stage, the voltage on one battery can reach 15.5 V. The current is limited to 2-5% of the battery capacity. Thanks to this stage, the voltage is equalized between the batteries in the battery, as well as between the cells in the battery itself. Since the equalization stage is performed at a very high voltage, it is strictly limited in time. The duration of this stage is determined by the battery manufacturer. This charging method is not suitable for batteries manufactured using GEL technology, since increasing the voltage on them is usually not recommended (Fig. 2.7.33).

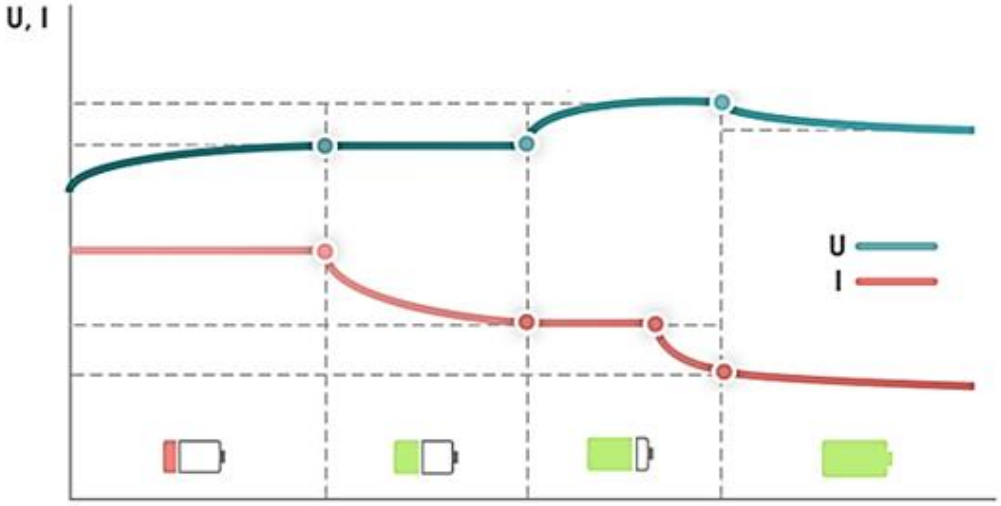

Figure 2.7.32 – IUI charge method [3]

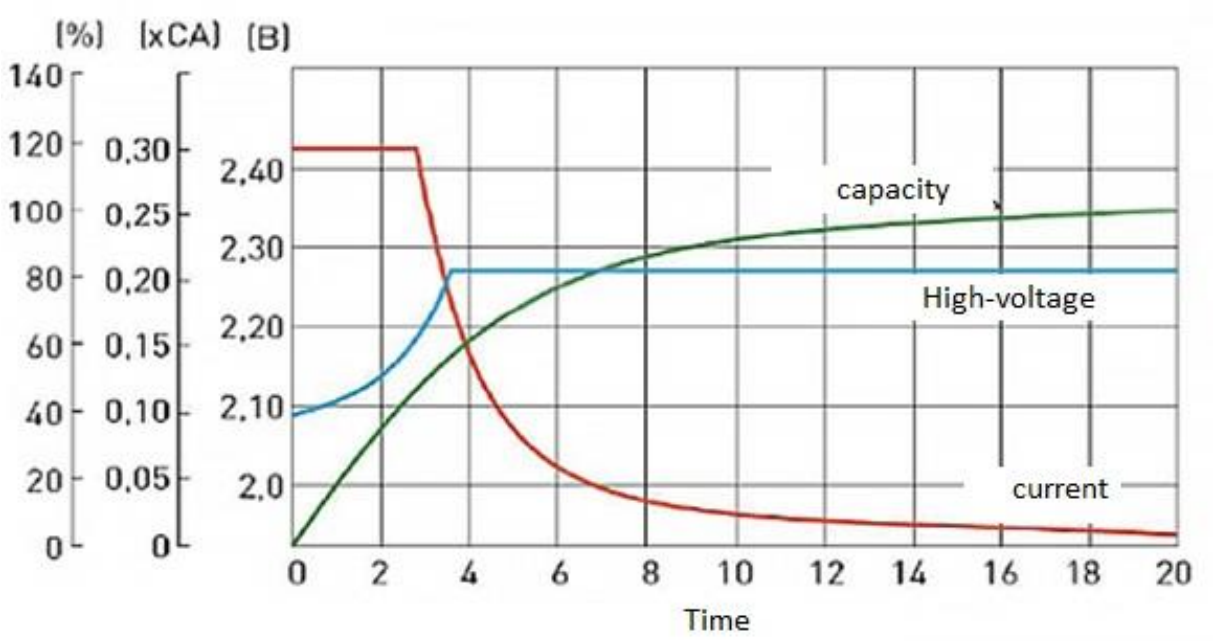

Figure 2.7.33 – Delta FT 12-50 M battery charging algorithm [3]

After the battery is charged, the charger switches to trickle charge mode. The condition for completing the battery charge is a decrease in the consumed current, or the battery charge is completed after the time has elapsed.

A generator is a device that converts mechanical energy in the form of torque transmitted from the engine to the generator rotor into electrical energy, which is subsequently fed into the machine's electrical system.

The generator must provide uninterrupted power supply and have sufficient power to:

– simultaneously supply electricity to working consumers and charge the battery;

– when all regular electricity consumers were turned on at low engine speeds, there was no strong discharge of the battery;

– the voltage in the on-board network was within the specified limits throughout the entire range of electrical loads and rotor rotation frequencies.

– the generator must have sufficient power, a long service life, small weight and dimensions, and a low level of noise and radio interference.

The operation of a car generator is based on the following principle:

– rotor rotation (when the car engine starts, it moves the belt that is connected to the generator rotor, and this rotation creates a magnetic field movement);

– current induction (an alternating magnetic field passing through the stator windings produces an electric current, which is formed in the windings due to the law of electromagnetic induction).

Scheme of converting alternating electric current into direct current Uϕ1 - Uϕ3 - voltage in the phase windings: Ud - rectified voltage; 1, 2, 3 - windings of three phases of the stator: 4 - power rectifier diodes; 5 - battery; 6 - load; 7 - rectifier diodes of the excitation winding; 8 - excitation winding; 9 - voltage regulator

The rectifier for a three-phase system contains six power semiconductor diodes, three of which: VD1, VD3 and VD5 are connected to the "+" terminal of the generator, and the other three: VD2, VD4 and VD6 to the "–" terminal ("ground").

If it is necessary to boost the generator power, an additional rectifier arm is used on diodes VD7, VD8, shown in Fig. 2.7.34, with a dotted line. Such a rectifier circuit can only take place when the stator windings are connected in a "star", since the additional arm is powered from the "zero" point of the "star".

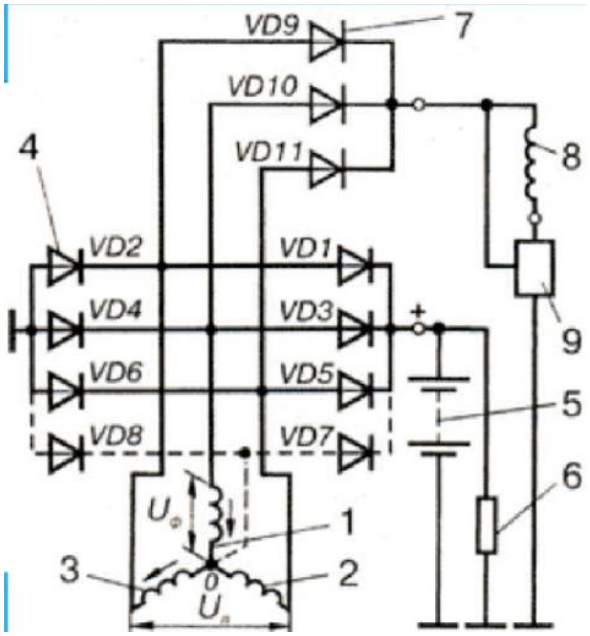

Figure 2.7.34 – Three-phase rectifier switching diagram

Scheme of converting alternating electric current into direct current. The frequency of this voltage f depends on the frequency of rotation of the generator rotor N and the number of its pole pairs p:

$$f = p * N / 60$$

With rare exceptions, generators from foreign companies, as well as domestic ones, have six "south" and six "north" poles in the rotor magnetic system.

In this case, the frequency f is 10 times less than the generator rotor rotation frequency.

Since the generator rotor receives its rotation from the engine crankshaft, the frequency of the engine crankshaft rotation can be measured by the frequency of the generator's alternating voltage. To do this, the generator has a stator winding output, to which a tachometer is connected.

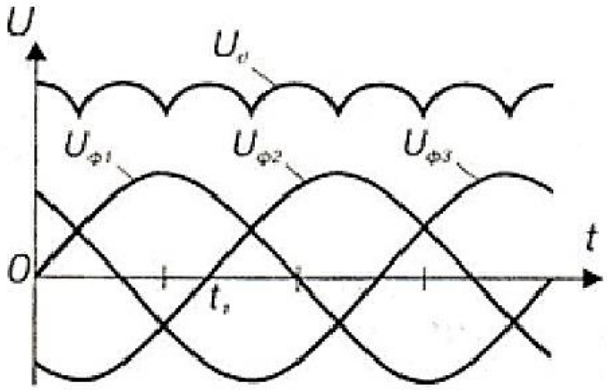

Figure 2.7.35 – Oscillogram of generator operation

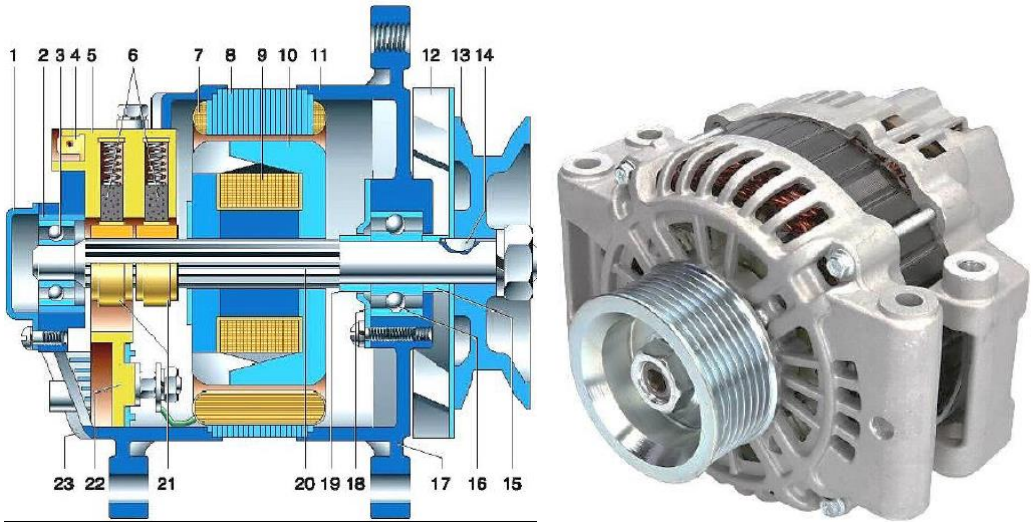

Figure 2.7.36 – Generator

Figure 2.7.36 numbers the following generator elements:
1 – rear bearing cover;
2 – rear cover bushing for the outer bearing ring;
3 – ball bearing of the rear rotor neck;
4 – terminal for powering the rotor excitation winding;
5 – brush holder housing;
6 – contact brushes;
7 – stator core winding coil;
8 – stator base

The following requirements are imposed on automotive generators:
– simplicity of design; durability and reliability;
– small dimensions, weight and cost;
– high specific power (power per 1 kg mass);
– the ability to ensure battery charging at low engine crankshaft rotation speed in idling mode.

Only AC generators with rectifiers satisfy the listed requirements to a greater extent, which is why they are predominantly used in modern cars.

When servicing generator sets, check the tightness of the fastening parts of the covers and the generator pulley. Rotate the rotor by hand to check the ease of rotation. Remove the brush holder and determine the degree of wear and ease of their movement in the brush holder, as well as the condition of the rotor slip rings.

With the generator disassembled, the stator winding and rotor winding are checked for breaks, interturn short circuits and short circuits to the housing, and the rectifier unit is checked for serviceability. The generator is checked to determine the rotation speed at which the generator is excited to the rated voltage without load and at rated load. The voltage regulator and protection relay are checked and adjusted if necessary. Integral regulators are not repairable; they are replaced with serviceable ones.

The performance of the generator and relay-regulators is checked on vehicles using portable devices or on the electrical site on specialized stands.

To drive the generators, the stands are equipped with repulsion electric motors or asynchronous three-phase electric motors and V-belt variators, which allows for smooth adjustment of the rotation speed up to 5000 rpm. The rotation speed of the generator rotor is measured with a tachometer. The load in the outer circuit of the generator is created with a rheostat and controlled with an ammeter. The generator voltage is controlled with a voltmeter.

The generator excitation circuit is connected to the battery by a switch.

2.7.5 Vehicle control systems

Vehicle control systems are a set of interconnected electronic subsystems designed to control the operation of the internal combustion engine, chassis components, and body systems, ensuring the highest possible level of vehicle functionality. The operation of these subsystems involves integrated interaction, coordination, functional consistency, data exchange, and process synchronization. System operation can follow an open-loop "control" structure: parameter sensor → control module → actuator, or a closed-loop "regulation" structure with additional feedback: monitoring (control) sensor → control module.

Engine Control Systems are a set of electronic systems and devices designed for the automated management of internal combustion engine operation to ensure reliable, efficient, and safe performance. These include subsystems for engine starting (and start facilitation), electronic control of major mechanisms (crank-piston and valve timing), and systems (fuel supply, exhaust gas removal, ignition, cooling, and lubrication).

The electric starter system is a key engine starting subsystem whose electric drive consumes the highest current among all electrical consumers in the vehicle, albeit for a short time. One of the most demanding modes for a vehicle's electrical system is the cyclic start-stop mode. Frequent engine starts require uninterrupted power supply to critical systems, which necessitates intelligent power management (special modules), as well as appropriate design and circuit solutions (reinforced electrical components, wear-resistant starter, battery with suitable specifications, multi-level power systems, starter-generators in mild hybrids, etc.).

Under unfavorable conditions, such as low temperatures, the performance of electric starter systems is improved through various engine start facilitation measures. Considerable attention is given to heating the engine, lubricants, fuel-air mixture preparation components, and the battery. This is usually achieved by using fuel energy directly burned in special devices (pre-start heaters, electric flame devices) or stored thermal energy from ICE heat-loss reduction subsystems. Powering electric heaters (glow plugs, tubular liquid heaters, etc.) requires electrical energy from the vehicle's batteries or from external sources.

Electrification of the valve timing mechanism (VTM) is considered in the context of retrofitting the traditional mechanical or hydraulic drive or transitioning to an electric drive for valve timing phases, meaning the replacement of the classical mechanism with electric actuators that control valve opening/closing phases. For the crank-piston mechanism (CPM), this involves retrofitting with mechanisms and electrical systems to regulate the geometric parameters, kinematics, and dynamics of moving elements (piston stroke, compression ratio, etc.).

Electrification of the engine's main systems helps improve its efficiency under various operating conditions and modes. This is achieved by introducing electric drives, sensors, and electronic control units.

Improving the efficiency of the lubrication system involves enabling distributed lubrication of friction surfaces according to their operating conditions, ensuring sufficient oil supply and pressure, as well as oil filtration and cooling, and ventilated removal of crankcase gases. The use of an electrically driven oil pump, in addition to the general pros and cons of electric drives, makes it possible for the system to operate independently of the crankshaft's rotational speed (including before starting the engine when it is not running).

For effective heat removal from excessively heated engine parts and flexible maintenance of operating temperature, the cooling system and its subsystems employ: electronic control units, sensors (temperature, level, quantity, etc.), and actuating components (electric drives for fans, coolant pumps, thermostats, clutches, control and shut-off valves, solenoid valves, electromagnetic clutches, etc.).

Electrical components of the fuel supply and exhaust systems contribute to achieving a fuel–air mixture composition that ensures optimal engine performance, including minimal environmental impact. An example of a "parameter sensor – control module – actuator" set of key subsystem elements is: fuel–air mixture composition sensors and exhaust gas sensors, control and regulation modules/units, and electromagnetic injectors for port fuel injection.

Where timely spark ignition of the working mixture in the ICE cylinders is required, the ignition system is designed to supply sufficient electrical energy for reliable operation under various vehicle operating conditions. For synchronized operation, the system requires data from the engine's systems and mechanisms (rotational speed and position of VTM and CPM shafts, engine load, temperature, mixture composition, etc.). Thus, the ignition and fuel supply subsystems, due to the interrelation of many input and output parameters, can be regarded as components of a single integrated system. Modern vehicle ignition systems differ somewhat in their high-voltage energy distribution schemes (DIS, COP, CNP, etc.).

Chassis Control Systems – systems that provide electronic control of a vehicle's chassis components, improving its performance characteristics, driving safety, and comfort.

This category includes subsystems for controlling: transmission (adjusting rotational speed, torque distribution, etc.), running gear (adjusting suspension characteristics, stiffness of elements, etc.), steering systems (power steering systems, variable steering ratio, all-wheel steering, etc.), braking system (distribution and regulation of braking forces).

Chassis control systems reduce the need for a high level of driver qualification by simplifying the driving process and increasing safety, accessibility, and comfort for a broader range of drivers with varying skill levels. Mechanical system control requires certain abilities, skills, and physical effort from the driver, which generally complicates vehicle operation and increases the likelihood of errors in selecting the optimal driving mode. Some parameters cannot be determined physiologically by the driver (for example, the coefficient of tire–road adhesion), and the reaction to their change is subjective and may be delayed.

Subsystem components, based on intelligent processing of objective data, can inform the driver, adjust and improve their control actions, and in some cases, perform actions without human intervention. The proposed assistant systems aim to help the driver operate the vehicle while leaving them responsible for and having the priority in making final decisions according to road conditions and the surrounding situation.

Body Control Systems – electronic systems that control the vehicle's body components, providing primary and auxiliary functions of safety, comfort, information, adaptive control, protection, etc.

The advantages of electrifying the powertrain, chassis, and body components of a vehicle include:

fast, precise, flexible, and adaptive control of the internal combustion engine and chassis and body components in real-time;

improved efficiency, power, economy, and environmental performance of the internal combustion engine due to optimized ignition and combustion processes (considering valve timing, fuel-air mixture composition, exhaust gases, ignition timing), the ability to change geometric parameters and deactivate individual cylinders in certain modes, maintaining optimal temperature conditions, reducing mechanical losses and wear, and simplifying operation;

enhanced driving safety by improving the vehicle's operational characteristics (handling, stability, braking performance, etc.);

facilitation of integrating electrified control and regulation systems into the overall vehicle management system.

The disadvantages that limit the widespread adoption of such systems include:

increased design complexity and reduced reliability compared to simpler mechanical (hydraulic and pneumatic) systems;

higher costs (manufacturing and repair), energy consumption, and mass-dimensional parameters.

Modern cars have significant advantages in terms of economic, environmental, ergonomic and other indicators compared to cars produced earlier. To achieve high indicators according to various criteria, the design of car systems and mechanisms has become significantly more complicated. In a modern car, the electronic control unit monitors and controls fuel injection, ignition, the content of toxic components in exhaust gases both at the level of changing fuel injection and at the level of afterburning of unreacted components, combustion of fuel vapors, stabilization of idle mode, and changing the valve timing. The introduction of feedback in various systems for adjusting the initial engine performance is of great importance.

The electronic control unit is the most complex device of the engine control system (Fig. 2.7.37). This unit is equipped with a CAN interface (transmission bus interface), high-power output stages. The input and output circuits of the ECU are placed in a metal housing and are connected to sensors, actuators and a power supply via a multi-pin connector.



Figure 2.7.37 – Electronic vehicle control unit

The components of the electronic system for direct control of the actuators are located in the EBC housing in such a way as to ensure good heat dissipation into the environment. SMD (Surface Mounted Device) technology. Conventional wiring is used only in some power elements and in the connectors. The EBC receives electrical signals from sensors or from generators in the expected value range, evaluates them and then calculates the start signals for the actuators (drives).

Digital signals. These input signals have only two states, “high” and “low .” Examples of digital input signals are on/off signals or signals from digital sensors, such as Hall sensors. Such signals are processed directly by the microprocessor after passing through a matching block, where the signal levels are adjusted.

The ECU is the control center of the system, responsible for the sequence of functional operations. Control functions with and without feedback are performed in the microprocessor. Input signals generated by sensors, generators with expected parameter values, and interfaces to other systems serve as input coordinates. They are further checked for accuracy in a computer. Input signals are processed by special matching generators or converted to digital form by input analog-to-digital converters. Protective circuits are used to limit the voltage of input signals to the maximum permissible value of the ECU. By using filtering devices, superimposed interference signals are in most cases separated from useful signals, which, if necessary, are then amplified to the permissible level of the ECU input signal. Output signals are calculated using programs, characteristics, and programmable matrices. The microprocessor is synchronized by a quartz oscillator. Input signals with the necessary parameters after selecting the Boots in the central processor are fed to the output keys (drivers), which amplify the current. The output keys are made taking into account powerful transistors of the p-p-p structure, most often these are Darlington composite transistors that control various executive elements (injectors, relays, solenoids, ignition coil (coils), etc.). Activation of a particular component is carried out by switching the output key to the open state (this control method is sometimes called "switching to ground"). The microprocessor's operating program for all possible modes and operating conditions of the engine is recorded in the microcircuit of a permanent device, i.e. memory designed only for reading information. In addition, the ROM stores all kinds of matrices, tables, values of correction factors and data necessary for the processor to calculate the duration of the injector control pulses, the ignition advance angle, etc. The ROM is non-volatile, i.e. all information entered into it is stored when the power supply is turned off for any length of time. To store the results of intermediate calculations (signal values coming from sensors and some other data), a random access memory (RAM) is used. When the ignition is turned off, all information currently stored in the RAM is lost. To store diagnostic information (fault codes), another random access memory (RAM II) is used, which has a constant (non-switched) power supply from the battery, called KAM (Keep Alive Memory). The information stored in the RAM II chip is stored when the ignition is turned off, but is lost when the battery is disconnected. However, some manufacturers use independent RAM. Input signals coming from various sensors are processed by special shapers or converted into digital form by input analog-to-digital converters, and only after that are used by the central processor to calculate the duration of injection pulses, ignition advance angle, idle valve opening, valve parameters.

Using its output signals, the microprocessor drives output stages, which are usually powerful enough to directly control actuators or relays. The output stages are protected against short circuits to ground or battery, as well as against destruction by electrical overload. Such malfunctions, together with open circuits or sensor failures, are detected by the output stage controller, and this information is transmitted to the microprocessor. Output signals can be switching and pulse-width modulation signals. Switching signals are

used to turn on and off actuators, such as the engine cooling fan. Pulse-width modulation signals. Digital output signals can be in the form of pulse-width modulation signals. These are rectangular signals with a constant period, but variable in time (Fig. 2.7.38), which can be used to start electromagnetic actuators, such as the exhaust gas recirculation valve.

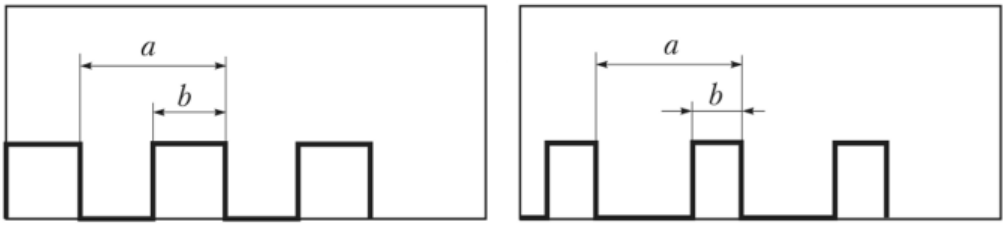

Figure 2.7.38 – Pulse Width Modulation Signals:
a – constant period; *b* – signal duration

Data transfer to other systems. The increasing use of electronic control systems in vehicles with and without feedback requires that individual electronic control units work in a network with each other. Such control systems include the ability to control the transmission, electronic engine management or fuel control, anti-lock braking system (ABS), electronic traction control system (TCS), electronic stability program (ESP); torque vectoring system (MSR); electronic immobilizer (EWS); on-board computer, etc. The exchange of information between systems reduces the total number of sensors required and improves the control of individual systems. Interfaces of transmission systems designed for automotive applications can be divided into two categories:

– regular interfaces;
– serial interfaces.

Binary signals can only be transmitted as one of two possible states – “1” and “0” (binary code), for example, for an air conditioning compressor “On” and “Off”. “On/Off” relationships can be used to transmit constantly changing parameters, such as, for example, the operating state of an accelerator pedal position sensor. The increase in data exchange between electrical components of a car has already reached such volumes that further attempts at control via conventional interfaces do not satisfy modern control systems, so transmission buses have begun to be used.

Electronic control unit network. Electronic control systems such as engine management, anti-lock braking system (ABS), traction control system (TCS), transmission control system, stability program (ESP) and others interact with each other in the network. have equal priority and are interconnected by a linear data bus system. One of the advantages of such a structure is that in the event of a failure. one system (subscriber system) all the others continue to work, having full access to the network. in which the failure of one unit or the central electronic control unit leads to a complete failure of the entire system. CAN is values in the range from 125 kbit/s to 1 Mbps. This occurs when using an address bus or data bus, through which the microprocessor issues, for example, the address of the RAM that must be currently available. The data bus is then used to transmit the corresponding data. require 16 bits or even 32 bits for the transmission bus. Transmit data to 65536 destinations In order to keep the system components operational, time-multiplexed (multiple) transmission is used for the address buses (data buses).

Built-in diagnostics. One of the important functions performed by the control unit is continuous self-diagnosis of both the input and output circuits of the components, as well as some functions of the internal state of the system. In modern control units, the implementation of self-diagnosis functions takes up to 50% of the microcomputer's resources. In the event of a malfunction in any circuit (for example, the absence or non-compliance with the specified signal level of any sensor), the microcomputer writes the digital code corresponding to this malfunction to a special memory area. To obtain information about the nature of the malfunction, it is necessary to "read" the code from the computer's memory. In previous systems, this could be done by putting the computer into the diagnostic code output mode using indicator lamp flashes.

Current sensor monitoring. In order to make sure that there is a normal supply voltage and that the sensor output signal is within acceptable limits (for example, for a temperature sensor this is the range between -40 and +150° C), the operation of the sensors is monitored by built-in diagnostic devices. In the event that the magnitude of the signal entering the control unit from any sensor or a set of signals from different sensors differs from the required values, the microprocessor analyzes the situation. As a result, defects in the sensors and actuators, breaks and short circuits in the wiring are detected. This data is recorded

in memory and at the same time the corresponding indicators are turned on, warning the driver. In addition, this information can be recorded in memory for long-term storage with its own power source for viewing using special devices called "scanners". The signals of the most important sensors are duplicated as much as possible. This means that in the event of a malfunction, another similar signal can be used or two or three selections can be made. Fault detection is carried out within a special scope of sensor monitoring. In the case of systems with feedback programs, such as pressure control, deviations from a given control range can also be diagnosed.

The signal path may be considered incorrect if the fault is present for more than a specified period of time, etc.) For many faults, the sensor can be re-checked if the path of this signal is determined during tracking as not having a fault in the analyzed time period. If the sensor output signal goes beyond the permissible limits, then switching to the default signal value occurs. intake air, engine oil; boost pressure; atmospheric pressure and intake air flow. In case of violation of functions important for movement, switching to replacement functions is carried out, which allow the driver to get to, for example, a car service. The same voltage is used to power various active sensors (absolute pressure, air flow or pressure behind the throttle valve, throttle position, etc.) and to supply bias voltage to passive sensors (coolant temperature and intake air). In some cases, the control unit may have two stabilizers - +5 V and +9 (+8) V. Very high requirements are placed on EBC:

– ambient temperature range (- 40...+ 70 °C)
– resistance to impact from materials such as oil and fuel;
– resistance to environmental humidity;
– the effects of electromagnetic vibrations.

In addition to issuing codes, almost all modern control units provide output to the diagnostic connector of a stream of digital parameters in real time. The list of these parameters includes the parameters of the sensor operation, the parameters of the signal calculated by the processor and the parameters of the internal state of the system. Control units with advanced self-diagnostic functions are capable of displaying up to 40...50 or more different parameters of the control system. Many control units, in addition to the functions listed above, allow operation in a two-way interactive mode. In this case, you can control the regulating components of the system (injectors, relays, solenoids) directly from the scanner keyboard, thus checking the health of various control circuits, or perform special tests (for example, balancing the power of the cylinders by sequentially turning off the injectors). Diagnostic functions of the engine control system Any modern microprocessor control system has some diagnostic capabilities. These capabilities are implemented by the controller in accordance with the program stored in permanent memory, at a time when the microprocessor is not fully loaded with the execution of the main control algorithms, i.e. in the background mode. During normal operation of the vehicle, the controller periodically tests its electrical and electronic components. If a malfunction is detected, the controller switches to emergency operation mode, substituting the appropriate parameter value for the algorithms instead of the one given by the faulty unit. For example, if the controller detects a malfunction in the coolant temperature sensor circuit, the program will set the temperature value for normal engine operation (usually 80 °C) and use this value when implementing the control algorithms to keep the vehicle moving. The replacement value will be stored in the ECU memory. The driver is informed about the malfunction using the CHECK ENGINE control lamp (or LED) located on the instrument panel.

Information transmission in telematics systems is carried out by a communication channel. A communication channel is a system of technical means and a medium for the propagation of data transmission signals from the source to the recipient. A communication channel or data transmission channel consists of a transmitting device, a receiving device and a communication line.

During transmission through communication channels, data is exposed to interference (interference), which can distort the content of the information. The ability of a communication channel to resist the influence of interference is called the noise immunity of the channel. Interference is usually divided into internal (thermal noise of the equipment) and external, which depend on the type of communication line. The noise immunity of signal transmission through the channel can be increased by coding and special signal processing.

When exchanging data over communication channels, three data transmission modes are used: simplex, half-duplex, and duplex.

Simplex communication is a one-way communication between two devices, a transmitter and a receiver. Signals are transmitted in only one direction, over the same communication channel.

Half-duplex communication is a two-way communication between two subscribers, in which data is received and transmitted alternately over the same communication channel, i.e. with time division: at each

moment of time, transmission is carried out in only one direction.

Duplex communication is two-way communication between devices that occurs simultaneously over a single communication channel.

Data transmission over a communication channel can be carried out in one of two ways: asynchronously or synchronously. Data transmission over a communication channel in telematics systems is carried out either in bytes (1 byte = 8 bits) or in an array of bytes, called a frame. Frames can contain several hundred bytes. However, in both cases, data transmission occurs sequentially, bit by bit, and the operation of the receiver and transmitter must be synchronized.

When data is transmitted in single bytes, the asynchronous or start-stop transmission method is used. In this mode, each byte of data is accompanied by a special "start" signal that notifies the receiver of the arrival of data, and a "stop" signal that indicates that the message is finished.

In modern cars, the number of different control systems that ensure the operation of the machine's components and assemblies, safety and comfort is increasing. These include the engine control system, the automatic transmission control system, the anti-lock brake system, the stability control system, the microclimate control system and many others. All these systems must constantly exchange data.

The complexity of electrical and electronic systems of modern cars, as well as the increase in the number of sensors, actuators and, as a result, the increase in the volume of information, led to the need to create a vehicle communication network.

All data transfer protocols are written in different programming languages, and they also differ in communication speed and structure of the transmitted signal.

If we use the throttle position sensor as an example, then combinations of the digital two-bit signal of this node can contain information about four states of the throttle position (Fig. 2.7.39).

As a result, we can conclude that the more states a protocol uses, the more data is encrypted in its signals. All system blocks that receive and transmit signals must be interconnected by conductors. In this case, each control block can send and receive data using even one conductor, which is carried out by serial data exchange.

The advantage of this exchange is that with serial data transmission only one wire is needed to transmit 8 bits, while with parallel data transmission eight wires are needed. The disadvantage of such a system is that data transmission takes 8 times longer. However, serial data transmission requires fewer wires, which makes the system more reliable.

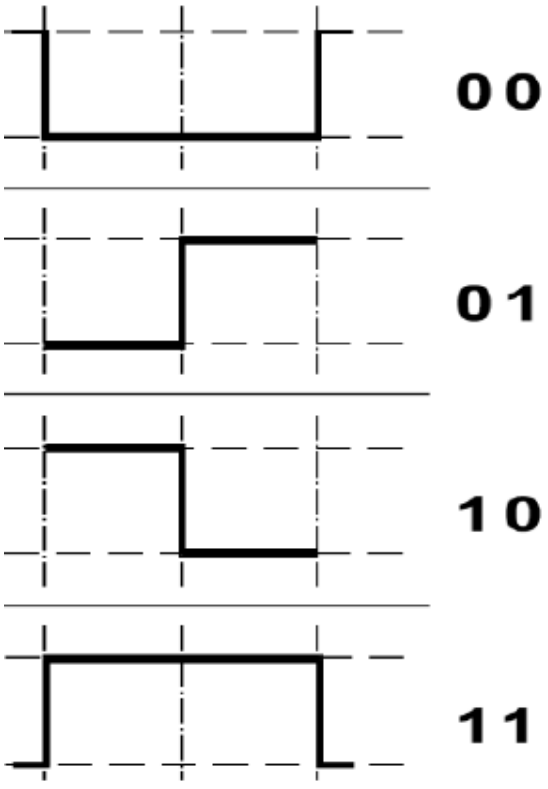

Figure. 2.7.39 – Different throttle positions: 00 – throttle closed; 01 – throttle open 30%; 10 – throttle open 60%; 11 – throttle open 100%.

Modern systems most often use not one, but two wires, since duplicating the signal over two conductors allows for self-testing, thereby providing additional control over data transmission in both directions. In addition, in two-wire buses, the cables are twisted in such a way as to protect the system from possible electromagnetic interference (Fig. 2.7.40).

Additionally, matching resistors are built into the two-wire bus, eliminating possible signal distortions, since resistive matching loads prevent signals from reflecting.



Figure 2.7.40 – Two-wire bus

The implementation of data transmission in CAN can be different: two-wire bus (twisted pair), flat cable, fiber optic, radio signals, infrared channels, power lines. The main limitation of the bus length is only the maximum allowable total signal propagation delay for a given transmission speed (in wires, input circuits of controllers, etc.).

In modern cars, the number of different control systems that ensure the operation of the car's components and assemblies, its safety and comfort is increasing. These include, for example, the engine control system, the transmission system, the anti-lock braking system, the anti-skid system, the stability control system, the climate control system, etc. During operation, all these systems must constantly exchange data with each other. For example, the engine control unit exchanges data with the anti-lock braking system, the automatic transmission, the passive safety system, the anti-theft system, etc.

Thus, the complexity of the on-board electronic network of a modern car, the increase in the number of actuators, sensors, controllers and, as a result, the amount of information they exchange, led to the need to create a high-tech vehicle communication network. Such a network was the CAN bus (Controller Area Network), which has become the most widespread among existing information bus standards. The CAN bus is a bus with serial data transmission. This bus is two-wire and operates at a data transfer rate of up to 1 megabit / s, which allows for prompt system control. The CAN bus was developed by Robert Bosch AG in 1987 specifically for use in the automotive industry. The CAN bus is also currently regulated by international standards ISO 11898 (high-speed CAN) and ISO 11519 (low-speed CAN).

A CAN bus is a system of several blocks, designed so that all of its blocks have the ability to send and receive data. In a CAN bus, there is no addressing of the block components. Instead, identifiers are assigned to the data packets being sent [9].

CAN was developed in 1987 by BOSCH Corporation. The CAN bus consists of two signal conductors (the third wire is common) and connects separate electronic control systems of a car into one network to exchange information with each other. The CAN bus is bidirectional, that is, any control unit can both receive and transmit information needed by other systems. It is also important that CAN is an open system and additional equipment can be connected to it.

The CAN bus is also used to input and output diagnostic information, which greatly facilitates and speeds up the diagnostic process. A single unified OVD connector serves for these purposes.

Modern security systems also work with the CAN bus, receiving information about unlocking doors, the hood, the trunk, etc.

In telematics systems for monitoring the condition of the vehicle, information about various vehicle operating parameters is also received via the CAN bus. This can be information about the vehicle's speed, crankshaft rotation speed, fuel level in the tank, brake system status, etc.

Using the CAN bus in road transport allows:

– exchange data between electronic vehicle control systems;

– diagnose malfunctions of various components and assemblies of the vehicle;

– install modern alarm systems;

– ensures the receipt of the necessary information for transport telematics systems.

The operation of the CAN bus is described by the ISO1189 protocol, developed by the International Standards Organization (ISO).

Due to the different requirements for speed, volume, and importance of data transfer, there are several varieties of CAN bus. For example, when exchanging data between some vehicle devices, high-speed transmission of large amounts of data is required, while for others, low-speed or small data transfer is sufficient.

The following types of CAN buses are used in cars:

– CAN bus of the power unit (high-speed channel), which allows to transmit information in real time at a speed of 500 kbit/s and serves to exchange information between the engine and transmission control units;

– CAN bus of the Comfort system (slow channel). It allows information to be transmitted at a speed of 100 kbit/s and serves for communication between control units included in the Comfort system;

– CAN bus of the information and command system (slow channel), transmitting information at a speed of up to 10 kbit/s.

A sample composition of CAN buses connecting the systems of a modern car is shown in the figure. The elements and blocks shown in Figure 2.7.41 may differ in composition depending on the make of the car.

To suppress the signal reflected from the end of the line, the high-speed channel bus is loaded with 120 Ohm resistors at both ends. The slow channel buses are connected to voltage sources through the resistors (this should be taken into account when working with these buses).

It should be noted that the CAN bus is also used for input and output of diagnostic information, which helps to speed up and simplify the diagnostic process. Each block or component can send its data over the bus with certain identifiers and, at the same time, by reading the identifiers of all data groups passing over the bus, determine whether it is necessary to continue reading and processing information of a particular data group or not. The identifiers also carry information about the priority of the data, using an arbitration scheme [10].

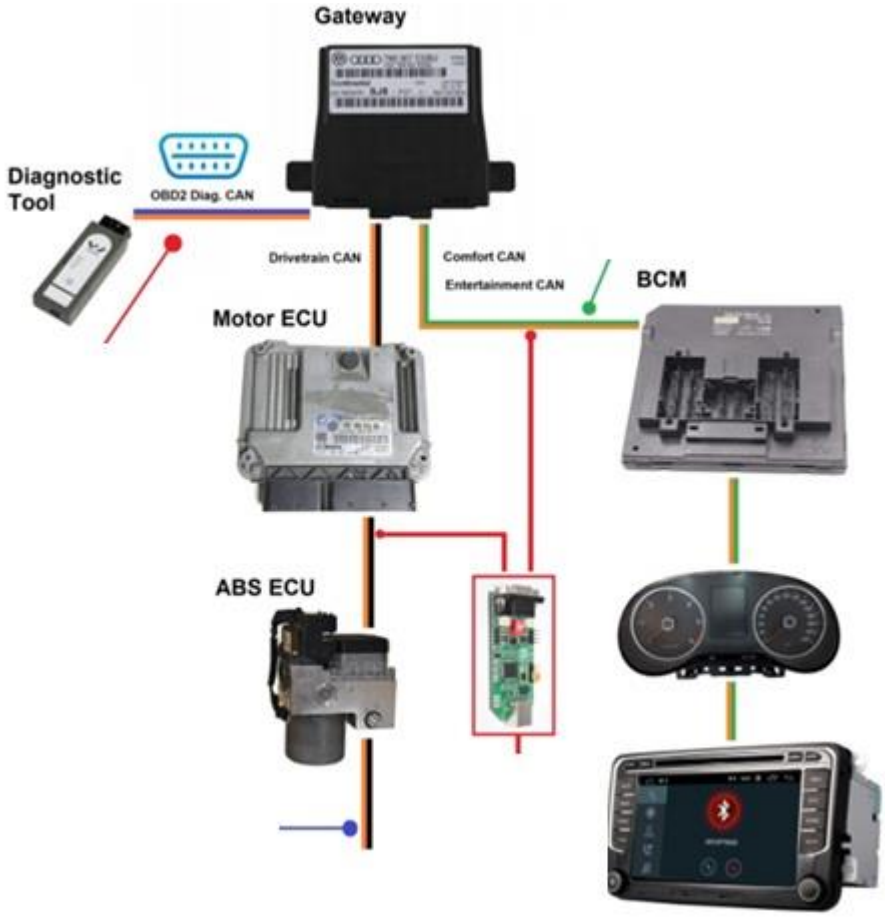

Figure 2.7.41 – Generalized block diagram of the CAN bus [10]

If data transmission is carried out by two blocks simultaneously, then at the signal processing stage, priority is given to the more important block. Let us describe this process in more detail. Each bus block must monitor the absence of a signal on the bus before sending a message. The CAN bus uses non-destructive bit-by-bit arbitration, which keeps the message intact when the initiative is lost. Arbitration allows messages to be transmitted with a higher priority, without delays and distortions.

Logic levels on the bus are defined as “dominant,” meaning priority, and “recessive,” meaning suppressed. Additionally, all bus units must monitor the logic state of all signals in order to initiate data transmission. On the CAN bus, logic bit 0 is defined as “dominant,” and bit 1 is defined as “recessive.”

Dominant bits will always win arbitration over recessive ones, which have a higher priority. Thus, if a logical zero and a one are simultaneously transmitted to the bus, only a logical zero (dominant signal) will be registered on the bus, and a logical one will be suppressed (recessive signal).

As a result, only the winning block continues to transmit data, trying to do so later.

In the CAN bus, messages are not addressed, that is, messages are not addressed from one node to another. The message contains the source identifier and the data itself. All nodes in a given network can receive each message on the bus and independently determine: this message should be discarded or processed.

Each block transmitting data must monitor the presence of the first transmitted bits on the bus. Messages with lower priority are stopped, after which the block that lost arbitration must wait for no activity on the bus and retry the message transmission.

For example, in a car, the battery voltage sensor is connected to the engine control module. The engine control module, in turn, transmits the data received from this sensor to all other units in the car. When using the CAN interface, all units that need this data can receive it, bypassing the engine control module.

Another very important feature of the CAN bus is the ability to remotely request data that is not expected, but is requested from a specific block according to priority.

The maximum data transfer rate is 1 megabit/s, but such a high speed can only be provided in networks with a data bus length of less than 40 meters. As the wire length increases, the data transfer rate decreases proportionally. Thus, when the wire length increases to 500 meters, the data transfer rate in the bus drops to 125 kbit/s [11].

CAN buses, depending on their speed and data transfer capabilities, are divided into three groups.

1. HS CAN bus (High-Speed CAN = high-speed CAN, with a transmission speed of 500 kbit / s).
2. MS CAN bus (Mid-Speed CAN = medium-speed CAN, with a data transfer rate of 125 kbit / s).
3. LS CAN bus (Low-Speed CAN = low-speed CAN with a data transfer rate of 50 kbit / s).

All three types of CAN buses listed above can be used in the design of a single bus in one car.

Data on the CAN bus is transmitted in the form of grouped information blocks or groups (frames) of data with an interval of 1 to 20 ms.

Figure 2.7.42 graphically presents the waveform data of the two-wire high-speed HS-CAN bus. These two conductors are named: CAN high (+) and CAN low (-).

The base voltage of the CAN high (+) wire is in the range of 2.5 to 3.5 V, and the base voltage of the CAN low (-) wire is from 1.5 to 2.5 V.

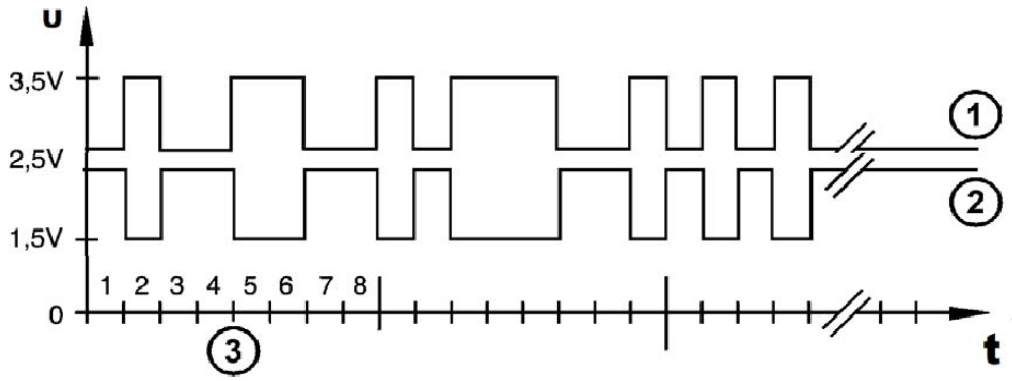

Figure 2.7.42 – CAN bus signal graph: 1 – CAN wire signal high (+); 2 – CAN wire signal low (-); 3 – signal transmitted in bytes

It should be recalled that this data is read by all blocks on the bus, but is used and processed only by those for which it was intended.

At the same time, each control unit included in the CAN bus structure can transmit three types of data:

1) data that the unit is connected to the network and operates in the bus;

2) data on the operation of systems and sensors connected to the unit, which are necessary to ensure the operability of the machine as a whole (cyclic data);

3) diagnostic data generated by the unit upon request from both the units included in the system and external diagnostic modules.

In a simplified form, you can imagine that each data frame sent by any of the blocks consists of several fields (Fig. 2.7.43).

The ID (Identification Data) field of each data frame carries additional information about the transmitting unit, shows the type of data, and also indicates its exact location in the message field.

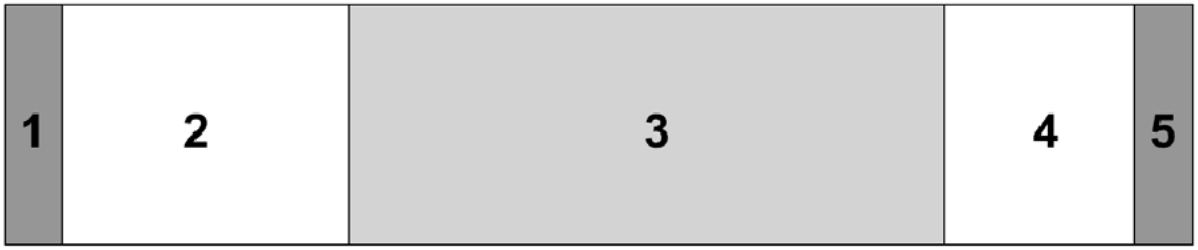

Figure 2.7.43 – Structure of a data frame in the CAN bus
1 – start field of the frame, 2 – identification field, 3 – field with transmitted data, 4 – error check field or confirmation field 5 – end field

The number of individual data frames transmitted by the control unit depends on the design of the control unit, as well as the amount of data required for the system to function.

In modern cars, the units that provide data exchange and transmission via the low-speed CAN bus can be: the instrument panel, the air conditioning control unit, the body control unit, the audio system control unit, etc.

Note that the dashboard connects to the low-speed and high-speed bus because it acts as a connection (gateway) between the data bus systems.

In turn, the blocks included in the high-speed bus can be the dashboard, the engine control unit, the automatic transmission control unit, the steering control unit, the hydraulic unit of the anti-lock braking system, the passive safety system unit, and the GPS unit [12].

The number of electronic control units in a modern car is rapidly increasing. To ensure reliable communication between them, in addition to the CAN bus, there are currently other data exchange technologies: the LIN bus and the MOST bus.

The LIN bus (Local Interconnect Network) provides control of devices located within a limited space, for example, the roof of a car, car doors, etc. In a car, the LIN network combines devices such as wipers, power windows, door locks, mirror drives and heating, and seat drives. The LIN bus consists of two wires: one is a signal wire, and the second is a "common" wire. The LIN and CAN buses complement each other and allow you to combine all electronic car units and devices into a single multifunctional on-board network. Moreover, the scope of application of CAN is the transfer of information between such control units where increased system reliability and high data transfer speed are required (engine control, airbags, ABS, tire pressure monitoring, etc.). The scope of application of the LIN bus is the combination of nodes that transmit information at low speeds.

Unlike CAN network nodes, LIN network nodes do not require the use of expensive microcontrollers with a built-in or external CAN controller. To build a LIN node, a simple and inexpensive microcontroller with a built-in hardware UART port and an external inexpensive receiver for connection to the single-wire LIN bus is sufficient. The data transfer rate on the LIN bus is 1...20 kbit / s.

The LIN bus operates according to the protocol described in the ISO 9141 standard. A logical “1” corresponds to a voltage equal to at least 80% of the on-board network voltage, and a logical “0” corresponds to no more than 20% of the supply voltage. A logical “1” is a recessive bit and indicates that the bus is free, and a logical “0” is a dominant bit, indicating that it is busy.

Data exchange between LIN system nodes and other vehicle control units occurs via the CAN bus. A CAN-LIN gateway is used to connect the CAN and LIN networks, which allows LIN messages to be transmitted to the CAN network and back.

The LIN bus is organized according to the Master-Slave principle, i.e. data is exchanged between a main master node and several slave nodes via the LIN bus. Up to 16 known control units can be connected to one master unit.

The CAN-LIN gateway controller in the LIN network acts as a LIN Master controller, which controls the operation of the LIN network's slave nodes.

Thus, the LIN Master gateway controller solves the following tasks: communication with the CAN bus; control of data exchange on the LIN bus (determines which node and which message will be transmitted); detection and processing of errors that occur during bus operation; control of data transfer rate; constant diagnostics of the operability of all units connected to the LIN bus. The LIN protocol uses a method of controlling access to the bus that is different from that used when operating the CAN bus. The transmission of all messages is carried out by the LIN-Master node, which forms a data packet containing the address of the known SLAVE node and the code of the operation that this node must perform.

A modern car is equipped with a large number of communication and playback devices, such as telephones, video systems, televisions and other infotainment devices. The MOST bus controls the operation and exchanges data between such devices. This bus transmits signals from digital television and radio, the Internet, LTE telephone, DVD-video, navigation, CD-radio, and data from telematics systems.

The MOST bus uses a fiber optic cable, which provides not only high-speed data transfer - 21.2 Mbit / s, but also high immunity when used in a car where electromagnetic interference is present. Another advantage of the bus is that it provides a standardized system for transmitting sound, images and control commands in multimedia systems.

In addition, the use of this technology allows you to do away with the many conductors required to transmit analog signals and significantly reduce the weight of the system.

A technical feature of the MOST bus is the fact that the data transfer protocol uses addressed transmission to a specific receiving device.

For research works LIN tires digital oscillograph connects to the line connecting the driver's door module and central bloc bodywork electronics. Oscillogram day off signal LIN tires in mode expectation presented on drawing 2.7.44.

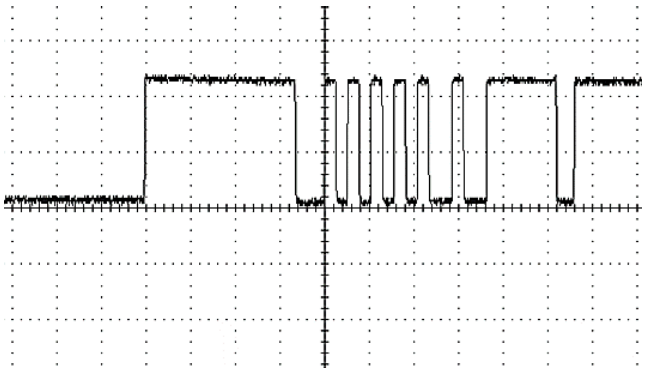

Drawing 2.7.44 – Form day off signal LIN tires in mode expectation

For receiving day off signal LIN tires in process signal transmission requires the use of one of the controlled elements stand: lock door, controlled mirror, power window etc.

Oscillogram of the LIN bus output signal during transmission signal is presented in Figure 2.7.45.

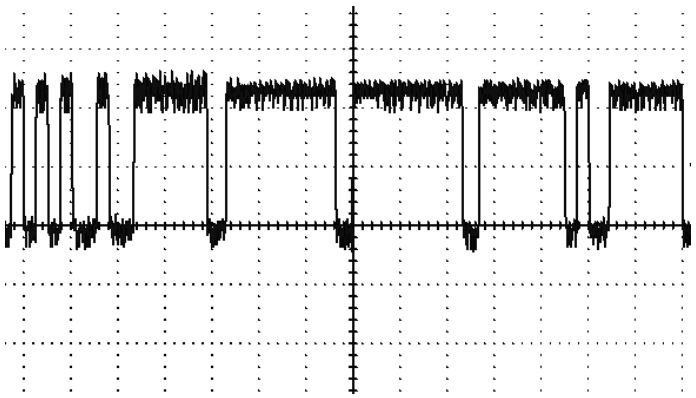

Drawing 2.7.45 – Form day off signal LIN tires at transmission signal

To simulate a LIN bus fault, a short circuit is made informational wires on minus sources food stand. At malfunctions LIN tires is lost possibility manage those parts of the car door that are controlled by this tire. Such parts are: electric lock and electric mirror with heating.

2.7.6 Safety and comfort systems

Safety and comfort systems are components of a vehicle's electrical equipment combined into functional complexes that provide protection for the driver and passengers (as well as other road users within the vehicle's influence zone) and also enhance the safety and convenience of operating the vehicle. These complexes integrate components of the aforementioned electronic vehicle control systems (Fig. 2.7.46).

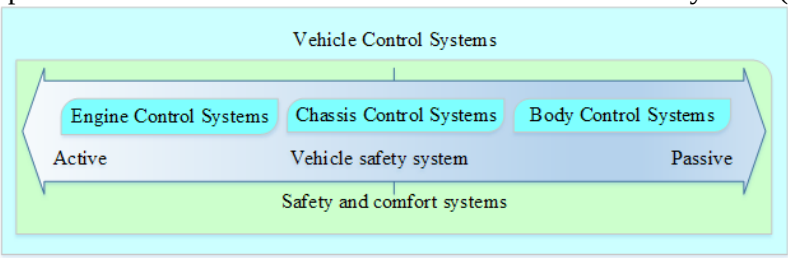

Figure 2.7.46 – Vehicle control systems

Overall, vehicle structural safety systems can be divided into those that help prevent accidents (active safety) and those designed to reduce the consequences of the vehicle's negative impact (passive safety). Sometimes, a further division is made, distinguishing safety subsystems into pre-crash, post-crash, and environmental (regarding the vehicle's impact on the environment).

By analogy, such systems are based on signal sources (sensors) for rapid and accurate informing of the relevant system components (ECU) about the status parameters of vehicle components, aiming for further

analysis of potential situation development and instantaneous response through the system's actuators to minimize possible negative consequences. The system's responsiveness is ensured by using high-speed bus data transmission technologies.

Vehicle security and monitoring subsystems are a set of electronic and hardware-software tools that provide protection against unauthorized access, theft, and real-time control of the vehicle's status and location. These systems include means for: preventing theft and damage to the vehicle (immobilizer, alarm system, electronically controlled locks, etc.); monitoring movement, informing the owner (dispatcher) about events, and remotely controlling the vehicle (GPS monitoring, remote counteraction to malicious actions); interacting with other electronic systems (bus technologies, safety subsystems, ADAS, etc.).

Comfort subsystems ensure the microclimate of the working environment and the ergonomics of the driver's workplace for convenience, comfort, and safe vehicle control, as well as the environmental parameters for passengers inside the vehicle.

The subsystems provide devices for: temperature, humidity, and airflow parameters (ventilation, air conditioning, climate control); adjustment settings of control elements, rearview mirrors, etc.; heating and cleaning of windows and mirrors, interior and body lighting, etc.; infotainment (information and entertainment systems) etc.

Advanced Driver Assistance Systems (ADAS) are a set of electronic vehicle systems that automatically assist the driver during driving, reducing the risk of accidents and improving safety, comfort, and driving efficiency. ADAS systems are classified by automation levels according to the SAE scale (Fig. 2.7.47).

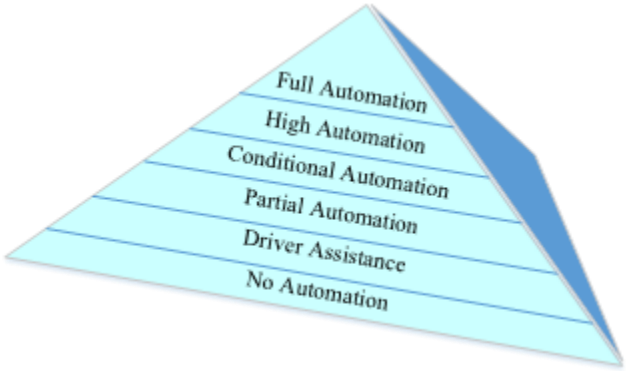

Figure 2.7.47 – Levels of automation of vehicle control systems

Level 0 (No Automation): no automation – the vehicle is fully controlled by the driver using warning systems;

Level 1 (Driver Assistance): use of individual assistance systems to help the driver, who controls most functions;

Level 2 (Partial Automation): partial automation – the system partially controls the vehicle, the driver monitors the road and is ready to intervene;

Level 3 (Conditional Automation): conditional automation – the system controls the vehicle, the driver participates only upon system request;

Level 4 (High Automation): high automation – the system controls the vehicle, driver involvement is unnecessary within defined Operational Design Domain (ODD) conditions such as road type, weather, speed, etc.;

Level 5 (Full Automation): full automation – the system controls the vehicle, driver and vehicle control interfaces are absent.

To enhance traffic safety, ensure process automation, improve vehicle informativeness, and more, there is a need to integrate the vehicle into information and communication networks.

The V2X (Vehicle-to-Everything) system is a communication technology that enables data exchange between the vehicle and both internal (within the vehicle) and external objects, with the aim of improving safety, traffic efficiency, and process automation.

One of the main:

V2V (Vehicle-to-Vehicle): vehicle ↔ vehicle;

V2I (Vehicle-to-Infrastructure): vehicle ↔ infrastructure (traffic lights, road signs);

V2P (Vehicle-to-Pedestrian): vehicle ↔ pedestrians (via smartphones, wearable devices);

V2N (Vehicle-to-Network): vehicle ↔ cloud services (navigation, updates).

Depending on the interaction object, different subsystems may be considered, for example: V2C (Vehicle-to-Cloud): vehicle ↔ cloud services; V2D (Vehicle-to-Device): vehicle ↔ personal devices in the cabin; V2G (Vehicle-to-Grid): vehicle ↔ power grid (for electric vehicles – EV; battery charging/discharging); V2S (Vehicle-to-Sensor): vehicle ↔ sensors (local or external sensors); V2H (Vehicle-to-Home): vehicle ↔ home (integration with home systems; power supply, etc.); V2M (V2B, V2R): Vehicle-to-Motorcycle; (-Bicycle; -Rail etc.): vehicle ↔ types of transport modes (specialized channels), etc.

The market of car security systems began to develop widely since the beginning of the 90s of the last century. These systems, judging by today's standards, were quite primitive. Naturally, the degree of protection provided by such alarms, after a fairly short time did not constitute significant obstacles to attackers who easily bypassed it. This contributed to the introduction of microprocessor technology as part of security systems.

Protection of movable property from theft is still relevant. Moreover, to ensure sufficient resistance of the car to theft, it is necessary to intelligently combine standard security systems with alarms installed as additional car equipment. Increasing professionalism of thieves and scientific and technological progress pose new challenges to developers of car security systems [1].

The central link of the alarm system is the base unit. Sometimes the name base module, main unit, main module is used. It includes a main connector through which the unit is connected to the power circuits (battery) of the car. The negative wire (ground) is connected directly to the car body.

The outputs of the main connector are divided into input and output. Through the input pins, the alarm system receives information from the car's circuits. Thus, through the input lines, the main module monitors the state of the door, hood and trunk limit switches, receives information whether the car's ignition is turned on. A separate input, called analog, can be connected to the buttons on the car's steering wheel and monitor the voltage on them. This input is used for secondary authorization mode.

The output pins are designed to control door locks, turn signals, siren, trunk lock, and power windows. One of the outputs is used to control the locking relay.

This is not so important, the main thing is that part of the information and control properties of the signaling is implemented through a wired connection.

The alarm control from the user side is carried out via a radio channel. In early alarm models, the generally accepted standard was the location of a superregenerative or superheterodyne receiver on the main module board. Radio reception was carried out at the permitted frequencies of 315 and 434 MHz. Moreover, the signal transmission was one-way - from the user's key fob to the alarm receiver. Today, radio communication in security systems is two-way. Both on the owner's side (key fob or tag) and on the alarm side, standard transceiver microcircuits are installed on electronic boards that carry out coded radio communication at frequencies of 434 MHz, 868 MHz and 2.4 GHz. Control occurs either in manual mode, when the user presses the key fob or tag buttons, transmitting the appropriate commands, or in automatic mode, when the control and request signal is transmitted automatically.

Three-button key fobs-tags and single-button tags, from the point of view of the radio channel circuitry, are identical devices. They are capable of transmitting about 20 control commands when pressing individual buttons, as well as simultaneous or sequential pressing of several buttons. In addition, if the tag function is enabled in them, then if a request radio signal is received from the alarm transceiver, the tag sends the corresponding signal. Thus, the automatic disarming function when the owner approaches the car, the “protection against capture” function, when the alarm turns off the engine without detecting the tag, and many other service functions are implemented.

The information exchange between the remote transceiver and the main module is carried out using a three-wire bus. Additional sensors and service devices, such as a microwave sensor, remote start module, slave module and other devices, are also connected via the bus.

The temperature sensor is mounted directly on the car engine and monitors the temperature during remote start. The microphone implements the function of listening to the car interior.

Almost all modern cars have several CAN buses. Information and control signals are transmitted via the buses between the CAN adapter of the car's electronic control unit (ECU) and the CAN adapters of standard electronic units. The CAN bus of the car may contain information about the temperature of the engine and passenger compartment, engine speed, and car speed. The full list of control and information signals is quite large and varies depending on the car brand and, of course, this information is closed by car manufacturers. If a CAN adapter with a microcontroller is installed on the alarm board, in the memory of

which information about the CAN signals of a particular car can be entered, and there is also access to the CAN signal databases, then you can receive information and control various car devices via the CAN bus. For example, there is no need to physically connect the wires of the main module to the limit switches of the doors, hood and trunk, but you can take information about their status from the car's CAN bus. There is no need to physically connect to the tachometer and speedometer to measure revolutions and speed. This information, like many others, can also be taken from the CAN bus. The same applies to control via the CAN bus. The main alarm module via the CAN bus can send a signal to open and close the locks, to the power windows.

One of the functions of the alarm is to notify the owner of unauthorized access. In the early stages, this role was performed by a siren connected to one of the outputs of the main module. Later, car pagers appeared, operating at frequencies of 315 and 434 MHz. Currently, such pagers are practically not used, and they have been replaced by car GSM modules.

Feature of the alarm system on basis digital tires relatively analog systems is the fact that there is no need to use auxiliary conductors and radically disassemble car interior, because numeric inclusions in circles car is order five points (against 20 - 30 in others types alarms), appears also possibility hide elements security systems.

Features of CAN bus construction much are lowering level influence electromagnetic fields of various nature, appearance which directly related with work car. Tire used not only for security systems, but and for connection others devices (rice. 2.7.48). It is worth noting that in this case where several devices can to be used at the same time, and speed transmission almost no data decreases.

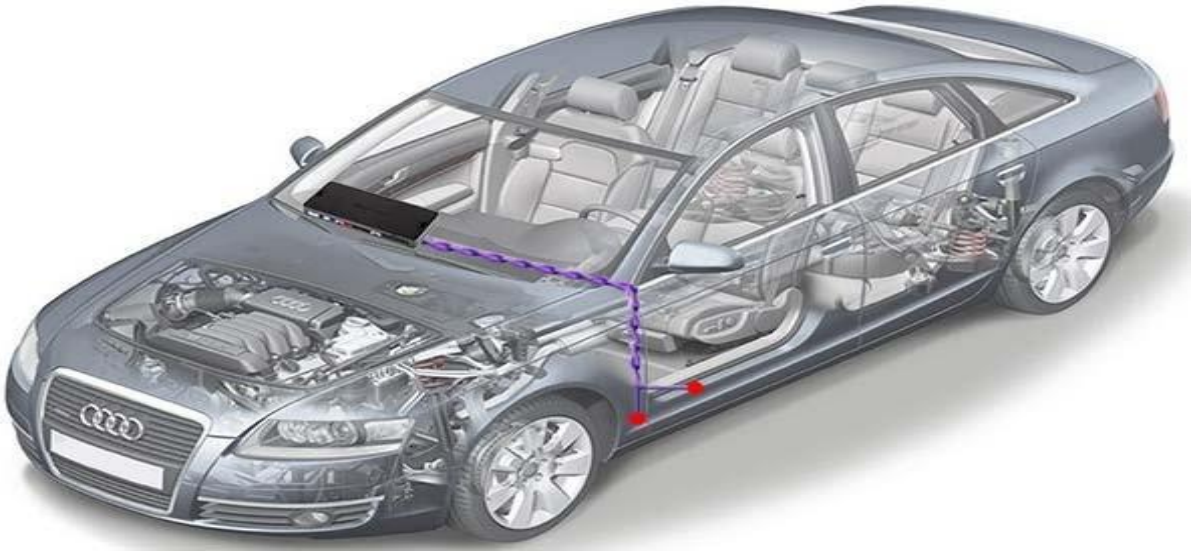

Drawing 2.7.48 – Points connection auto alarms on digital CAN bus

Adapter digital type CAN tires, guarantees stable work security system. The essence of the action is to read information from the CAN bus and converting it into digital analog signals that are necessary for sending to keychain auto alarm system. Appears also possibility management devices car (discovery / closing doors (windows), receiving information from the speedometer) [2].



Drawing 2.7.49 – Points connection alarms

«Everyone CAN module has individual program, which intended exclusively under certain car. Feature CAN buses there are absence the only one generally accepted standard protocol transmission data, which allows designers car flexibly to adjust system under specific task» [2].

Currently, the market is saturated with various types of car security systems - from the simplest to the most complex and expensive.

Typically, such alarms consist of a central unit, a set of executive and command units, and sensors.

Key fob systems were originally developed to alert and protect the car owner at a distance of no more than two hundred meters and became widely used in the 1980s.

The main unit in such a system performs the function of the “brain” – all other systems are connected to it. Different components have their own microcontrollers, but the interaction program is located in one – the main one. From the main controller, control signals go to the performers through various channels.

"A striking example is the widespread Sheriff ZX-1095 PRO car alarm with key fob activation and a range of up to 1000 m. The security system has two-way communication and is characterized by an advanced dynamic code. Sheriff ZX-1095 PRO is compatible with any modern car equipped with gasoline or diesel engines, any type of transmission and even equipped with a push-button start system. The set for sale is presented in Figure 2.7.50" [3].

The advantages of such signaling include:

– perfect development of the kernel and software;

– dual coding algorithm;

– low current consumption.

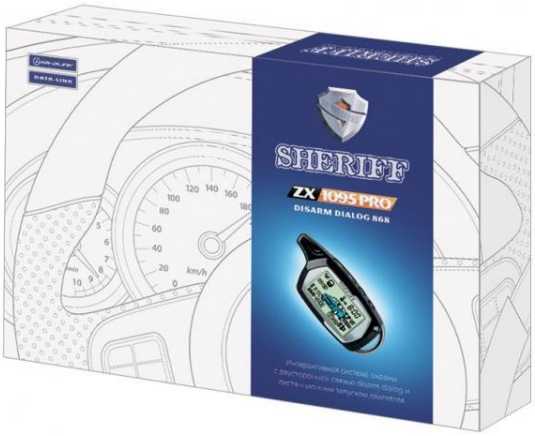

Figure 2.7.50 – Car alarm Sheriff ZX-1095 PRO

In the conditions of a modern city with radio interference and high-rise buildings, the key fob often cannot catch the alarm signal from the car, so now the best choice for professional protection is a GSM alarm that works at any distance and cannot be silenced even by quite expensive equipment. It is also worth noting that the GSM alarm allows you to control the functions of the vehicle while in another city.

Such an alarm system with a GSM module is "Pandora 5000 PRO" (Fig. 2.7.51). Its main advantage is the presence of two-way communication, which allows the owner to receive notifications about the alarm mode on a phone, tablet or other type of portable equipment [4].



Drawing Figure 2.7.51 – Car alarm Pandora 500 PRO

Driving a car occurs in the following three ways:
– mobile car management application;
– SMS messages;
– voice alerts and phone calls.

It is the use of the dialog coding method that makes it possible to protect the security system signal from being intercepted by most devices that are currently used by intruders. Also, the car alarm is equipped with a microphone, which is usually placed in the car interior and allows you to listen to everything that happens in the vehicle and record sounds in real time. In the maximum configuration, there is an opportunity to install a separate speaker or connect the car's audio system to be able to contact the intruder and try to convince him to leave the vehicle in order to reduce the punishment or resolve the situation without calling the police.

StarLine D94 GSM/GPS alarm system (Figure 2.7.52) is a security and telematics complex used to protect a vehicle with intelligent engine start, non-scannable dialog control code, integrated multi-system 2CAN interface, GPS interfaces, integrated GSM, 512-channel transceiver with a notification range of up to 2000 m ^{2} [5].



Figure 2.7.52 – StarLine D94 GSM/GPS car alarm

System functions:
– remote opening and closing of doors at any distance;
– vehicle control on the map, determination of road transport coordinates;
– vehicle condition monitoring (engine and cabin temperature, battery).

Scher Khan MAGICAR 9 (Fig. 2.7.53) is a model of a security complex that is considered an improved two-way car security system with remote engine start.



Figure 2.7.53 – System automotive security guard complex (car alarm) Sher Khan MAGICAR 9

This system connects to tires CAN with controlbattery status. The system synchronizes key fobs start-up with automatic data transfer to all key fobs. Declared rangecommunication to 2 km . In progress works channel management stable connectionprovided at a distance of up to 1.1 km. In conditions of very high obstacles Scher Khan MAGICAR 9 can be controlled by the system at a distance of 210 and 220 m. The system also consistently notifies user about events that happened with by car in all test points, except the furthest point is 360 m. Scher Khan MAGICAR 9 at connection toCAN buses consumes 15 - 20 ma. If with with the CAN module disconnected without security system consumes 35 ma and 40 ma in mode security, then when the digital bus is activated, consumption increases to 50 mA and 60 mA.

Figure 2.7.54 shows the X Keeper Drive V3 car alarm system. The advantage of this security system is the absence of usual keychain management alarm system. Developers decidedabandon the use of the radio channel to control the system in favor of a progressive mode automatic identification of the owner using a high-frequency tag and SMS notifications [6].



Figure 2.7.54 – Systemic pay car alarms X Keeper Drive V3

Management alarm system is being held smartphone with using Java application, which is easy loading with site manufacturer. IN In addition to the main unit, the kit includes an external GSM antenna, a

GPS receiver and a unit identification tags. Also attached AMG type lead-acid battery 1.3 A/h, 6 V. For operation via CAN bus system is being completed additional module CAN PRO. IN system X Keeper Drive V3 uses the Telit Ce868 DUAL GSM transceiver. By design developers, in regular mode smartphone needed for notification owner, because by daily operation system automatically recognizes label and is being removed with protection is not demanding from owner additional actions. IN reverse sequences is being held installation on security. Tag works on frequency 2.4 GHz, and signal characterized by dialogical coding. Management smartphone has higher priority over label. If so system X Keeper Drive V3 put on security with smartphone then label car cannot be unlocked. Management is carried out by Java applications that generate commands and send them SMS messages, which, in addition to the command, also contain an identification code owner. If the SMS arrives without such a code, the system considers This is a hacking attempt. This system notifies the owner of the attempt interception (jamming) GSM channel. Also, in this system missing DTMF control, but you can program X Keeper Drive V3 so that when you call from your smartphone owner was carried out launching engine, or removal with This security system also integrates into its own web interface to display geolocation car and its track. This service allows control vehicle, track its movements and events occurring with alarm system.

The radio channel, which transmits data between the security system and the key fob, has one drawback - radio waves propagate in a non-directional manner, and data exchange can be intercepted while being at a considerable distance from the vehicle owner. Such communication channels are called unsecured, and therefore the data transmitted over them is encrypted.

Data is transmitted over the radio channel in the form of small sequences – packets. Each packet can be presented as a command (“Open the locks”) and a response to the command (“Locks are open”).

The very first car alarms with a radio channel used a static code, meaning each command had its own packet. The packet format was chosen by the user himself, by soldering or switching jumpers inside the key fob.

There were not many code variants, so you could open someone else's car with a similar alarm with your key fob - the packet formats matched. It is clear that such coding did not provide any specific protection. It was enough to listen to the packet corresponding to the "Disarm" command at least once, and then simply repeat it and gain access to the car.

It was then that the first code grabbers appeared - technical devices designed to intercept, decode and repeat the code. The ultimate goal of a thief using such a code grabber is to disarm the car that has "looked closely", and then steal things from the interior or steal the vehicle itself.

The structure of the code grabber is similar to the key fob of a security complex. The code grabber has a control microcontroller, a transmitter, a receiver, buttons and an indication. That is why the code grabber is placed in the case of the alarm key fob, because there are already buttons and a receiver with an antenna there. For code grabbers, a static code does not pose a particular problem, so very quickly, manufacturers of security alarms were forced to switch to another type of coding - dynamic.

"Dynamic code differs from static code in that the packet format changes each time the button is pressed."

The packet changes according to a certain law, which is known only to the alarm and the radio key fob attached to it. This means that it is impossible to simply repeat the recorded packet - the alarm discards old data packets” [8].

When the vehicle owner presses the button, a request to execute a command is sent from the key fob to the central unit of the car alarm. Next, the control unit needs to make sure that the command was sent from the owner's key fob. To do this, it generates a random number and sends it to the key fob. This is processed according to a certain algorithm and transmitted back to the control unit. At this time, the control unit processes the same number and compares it with the number from the key fob. In both cases, if the numbers match, the central unit executes the command. It is worth noting that the specific algorithm used to calculate the random number is individual for each alarm and is laid down in it at the production stage and is a trade secret.

At first, it seemed that this would be enough, and the problem of code grabbers would be solved forever – but dynamic coding also failed to cope with the new challenges.

The first method of hacking a dynamic code is based on changing the code in the alarm system (code grabber, code changer), in which the commands for arming and disarming are carried out by pressing a single key. This method of hacking consists in creating an obstacle and intercepting the signal. When the owner gets out of the car and presses the key fob button, strong radio interference is created, as a result of which the signal with the secret code does not reach the main alarm unit, but is intercepted and copied by the

code grabber. The surprised driver presses the button again, but the process is repeated, and the second code is also intercepted. The second time the vehicle is armed, but the command already comes from the attacker's device. When the owner calmly goes about his business, the thief sends the second, previously intercepted code, and disarms the car.

It is clear that protection against such hacking is the use by auto-signalization manufacturers of improved message generation algorithms with a link to the creation time and, accordingly, the code validity time, which will ensure the "so-called" aging of the data package stored by the thief. In this case, the message should age out in a very short period of time, which will not allow the criminal to use it. But, in the case of hacking encryption algorithms, the attacker can create a duplicate of the legitimate key fob.

The second method is analytical and is based on the vulnerability left in the algorithm by car alarm manufacturers. For example, the same keys in the standard systems of some cars. This makes it possible to produce the so-called algorithmic code grabbers. Such devices determine the brand and brand of the alarm from the digital signal of the radio key fob, then it is compared with the database of factory "secret" codes (or manufacturing codes), and finally the code grabber starts working in accordance with the received data, becoming a complete duplicate of the owner's radio key fob. The factory database is formed using information leaks from the manufacturers themselves, and using some vulnerabilities (for example, identical keys for a whole series of car alarms).

Many manufacturers of car security systems have developed their own dynamic codes, introducing various improvements. Some of them have not been disclosed yet, but they can supposedly be used in modern security systems. However, it is worth understanding that no dynamic code guarantees absolute protection against hacking.

Today, the so-called "dialogue coding" is considered quite reliable, requiring a two-way communication channel (the presence of a receiver and transmitter, both in the main module and in the key fob).

The identification of the key fob is carried out in several stages. Let's consider in more detail the process of arming/disarming the car. The encryption of the alarm occurs in the dialogue mode between the key fob and the central alarm unit located in the car. When the owner presses a button, the key fob requests the execution of a command. In order for the central unit to make sure that the command came from the owner's key fob, it sends a signal with a random number to the key fob. This number is processed according to a certain algorithm and sent back to the control unit. At this time, the control unit processes the same number and compares its result with the result received from the key fob. If the values are equal, the control unit executes the command.

The algorithm of dialog coding is quite convenient to explain using the example of characters from cryptography and encryption textbooks - Alice and Bob.

Let's imagine that Bob has locked himself in the house and does not want to let anyone in except Alice. There is no peephole in the door, there are no windows in the house. After Bob hears a knock on the door, he needs to check if Alice is really standing there. The best way is to ask a question to which only she knows the correct answer. If the person behind the door answers correctly, you can safely open it. The security system with a dialogue code works in the same way:

1) when you press the button, the key fob sends a packet with an authorization request ("knocks on the door");

2) the main module, having received it, invents a kind of "riddle" packet, to which there can be only one answer. The "riddle" is transmitted to the key fob via a radio channel;

3) the key fob, having “solved the riddle”, responds with a confirmation packet;

4) the main module checks the answer and, if it is correct, executes the key fob command (opens the door).

Now let's add another character, Eve, who really wants to get into Bob's house. Under certain conditions, she can eavesdrop on the conversation between Bob and Alice and learn the answer to Bob's riddle.

Therefore, the riddles must be different each time. In dialog coding, the role of the riddle is played by a random number, which is generated using a special algorithm. The "randomness" of this number must be very high.

Therefore, in dialog coding, the process of "solving the riddle" must be unique for each "security complex - key fob" system. This can be implemented using an encryption key, which is created when the key fob is linked to the system.

So, in order to implement the dialog code, it is necessary to provide:

1) a high-quality algorithm for generating random numbers ("riddles");

2) a unique key for each security complex;

3) replacing the key when re-binding the key fob to the security complex;

4) sufficient length of the unique key (protection against brute force) – 128 bits.

If at least one of these points is not met, the code is not crypto-resistant and can be cracked by an attacker who has the firmware of the main module or key fob.

Another important condition for implementing dialog coding is a high-quality, reliable and fast radio channel, since even one press of the key fob button causes active packet exchange. If at least one of the packets is lost, the entire procedure will have to be repeated again.

The Diffie-Hellman algorithm is used to securely bind devices (register a tag in a security complex).

"One of the fundamental problems of cryptography is secure communication over a channel that can be eavesdropped on. Messages need to be encrypted and decrypted, but to do this, both parties need to have a shared key. If this key is transmitted over the same channel, the eavesdropping party will also receive it, and the point of encryption disappears."

Using the Diffie-Hellman algorithm allows two parties to obtain a shared secret key using an unprotected channel. The resulting key can be used to exchange messages using a dialog code" [9].

To ensure secure data transmission between authorized devices (i.e., a registered tag and a security complex), a time-tested block encryption protocol with a message authentication code (MAC) and a block and counter coupling mode - CCMP is used. It is used in the WPA2 protocol (for protecting WiFi networks).

Here, an algorithm is used that is different from the "dialogue" used to transmit control commands from the key fob. This is due to the fact that Bluetooth Smart assumes that the connection is constantly maintained. That is, constant monitoring of the presence of communication is provided. Data exchange is continuous, with a short period of time the tag confirms that it is nearby, and the central device checks its validity. With this approach, an attacker cannot "pretend" to be a tag and transmit false data.

Dialogue is efficient for transmitting control commands and requires 4 packets, but for constant control dialogue is too cumbersome and leads to high power consumption. CCMP is adapted specifically for constant communication support with a given period. To establish a connection, a complex procedure for generating session keys is performed, but due to this, maintaining the connection does not require the transfer of large amounts of data.

Low energy consumption is ensured by the following factors:

– high data transfer rate of 1Mbps (data is transmitted quickly and most of the time the receiver and transmitter are turned off);

– scheduled communication output (receiver and transmitter are turned off between scheduled communication outputs);

– CCMP encryption allows for fast data transfer – compared to classic dialogue, it takes 3 times less to maintain the "on-line" status. Special GFSK modulation is used with a modulation index ranging from 0.45 to 0.55, which reduces peak consumption and allows operation from a small battery;

For example, tags in modern security systems communicate with security systems once a second and transmit the necessary data in tenths of a millisecond.

Interference immunity is ensured in the following ways:

– the spread spectrum technology of the PRRCH (pseudo-random tuning of the operating frequency) is used – that is, the frequency where data is transmitted is constantly changing;

– the frequency channels for establishing and maintaining a connection are separated. This way, devices looking for someone to connect to do not interfere with devices that have already established a connection.

3 frequency channels are allocated for establishing a connection (advertisement channels), which do not coincide with the most crowded frequency ranges - WiFi channels.

37 frequency channels for connection support (data channels) are allocated. Also, 37 PPRF channels provide good protection against signal scanning. Each pair of Bluetooth Smart devices selects one of 1043 time-frequency signal coding matrices (i.e. data transmission sequences on different channels), without knowing which one, the attacker will not be able to isolate the desired signal from the air. For these reasons, the task of radio signal retransmission is significantly complicated.

Security systems with a dialogue code use a modern radio channel made on a single-chip transceiver. It allows for quick and clear dialogue exchange, and encryption keys individual for each system reliably protect the system from hacking.

The system, having received a dynamically encoded command ("password"), does not execute it

immediately, but sends a request for confirmation - a random number, also dynamically encoded. The radio key fob receives it and, using a secret key and a complex algorithm, forms a "response", dynamically encodes it again and sends it to the system. If the response is correct, the system executes the command, and the process takes a fraction of a second. Unlike a radio key fob, a code grabber in the hands of even the most ardent thief does not know the code change algorithm, the encryption key and is not able to form a response in the time allotted for this.

The algorithm by which calculations are performed on the radio key fob and control unit is individual for each car alarm and is built into it at the manufacturing stage.

Let's consider a simple algorithm:

$$Y = X \cdot T\ 3 \cdot X \cdot S\ 2 \cdot X \cdot U \cdot H\ , \qquad (2.7.10)$$

where: T , S , U and H are the numbers that are set in the alarm at the factory;

X – random numeric, which transmitted on keychain for verification;

Y – numeric, which calculated block management and radio remote control by given algorithm.

Car owner alarms presses on key and with keychain on bloc management transmitted request on removal car with security. IN response the central unit generates a random number (for example number 846) and sends it to the key fob. After that, the central unit and the keychain is made calculation numbers 846 by algorithm (for example let's calculate on given above simple algorithm).

For calculations we will assume: T = 29, S = 43, U = 91, H = 38.

846·24389 – 846·1849 + 846·91– 38 = 19145788.

Numeric (19145788) will send the radio key fob central unit management. Simultaneously with this central unit management will perform such the same calculation. Numbers coincide, central unit confirms team keychain, and car is being removed with security.

Even for decryption elementary algorithm, given above, will be needed four times (in our case in equations four unknown) intercept data packets.

Intercept and decrypt the packet dialog data car alarms is practically impossible. The so-called hash functions – algorithms that convert strings of arbitrary length up to 32 letters and numbers.

Below are the results of number encryption by the most popular MD5 encryption algorithm. For example, the number 846 was taken and its modifications:

MD5 (846) = 84f7e69969dea92a925508f7c1f9579a;
MD5 (841) = 02a32ad2669e6fe298e607fe7cc0e1a0; (2.7.11)
MD5 (146) = a5e00132373a7031000fd987a3c9f87b.

The results of encoding numbers that differ by only one digit are completely different one on one.

Every year, the structure of a modern car becomes more complex. New quality standards and environmental standards are regularly revised and appear, higher requirements are put forward for safety and comfort. All this implies the appearance of additional electronic components. In addition, more is required of a modern car than simply performing the classic functions of a car. As a result, fundamentally new areas appear in automotive electronics, the youngest and most promising of which is telematics. Anyway, the term "telematics" is derived from two: telecommunications and computer science.

The concept of automotive telematics is the use of computer, sensor, and telecommunications technologies for the remote provision of services in the vehicle (Fig. 2.7.55).

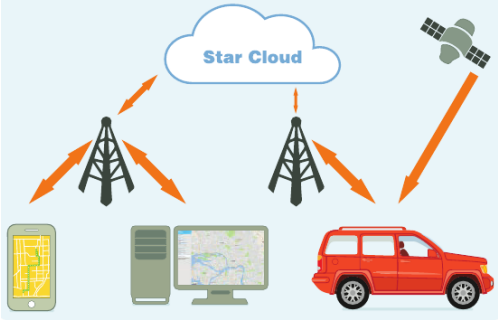

Figure 2.7.55 – Automotive Telematics

The main categories of telematics services are navigation, remote diagnostics, fleet management, security, multimedia functions, communication and access to information. In addition, when creating telematics devices, confidentiality and data security must be ensured. Telematics finds its main application in intelligent transport management systems, which make a significant contribution to solving transport problems in almost all major cities in the world, as they help to solve a set of tasks: increase the average speed of movement, reduce the number of traffic jams, reduce carbon dioxide emissions, and also increase the revenue of state budgets.

The automotive telematics system will perform the following functions:

1) informational – being at a considerable distance, the owner remains in touch with his car, if there is any device with Internet access (computer, netbook, iPhone, iPad Android, etc.) – find the location of his car, remotely start the engine, get information about its technical condition, etc. The car is controlled and monitored via SMS/voice calls (dtmf)/website. The storage is an Internet portal to which objects equipped with this device automatically "dump" information about the current state and take settings from it for their work;

2) the security function includes:

a) a tag with a 2.4GHz dialogue code based on STM32W, for automatic access to the object;

b) protection against GSM signal jamming (constant monitoring of the communication channel by the server + detection of jamming by the alarm system itself);

c) GSM/GPS/GLONASS tracker function – if the car is stolen or parked, you will be able to find out its location;

d) hidden video surveillance – RS485 from the alarm system connects video cameras consisting of STM32F4 and a CMOS camera on board;

e) digital relays - even by physically removing or disabling the alarm, the attacker will not achieve anything - the relays will de-energize vital circuits, and they will no longer be activated, even by directly supplying power to them. Digital relays also control the pins in the doors - even if the attacker breaks the glass and/or breaks the lock larvae - he will not be able to open the door, even if he breaks its lock - the electronic pins in the doors, which are unlocked only by the alarm, will prevent the door from being opened;

e) 1 or more GSM/GPS, also homemade, are used as additional equipment.

It is also recommended to use a hood lock, steering wheel lock, and glass armor (breaking the glass to steal your belongings from the interior or to get inside will be extremely problematic - it even protects against bullets from an air gun):

– rescue – a car equipped with this device will be able to independently call emergency services, even if the driver and his passengers are no longer able to take any action. The installation of such devices is expected to save 2,500 lives per year in Europe and reduce the consequences of injuries in road accidents by 14%.

– logistics – for companies engaged in freight transportation. Control and tracking of transport movements, accounting of fuel consumption by the fleet, etc.

To capture data about the vehicle's condition (engine speed, oil and fluid pressure sensor, etc.), a connection to the vehicle's diagnostic connector is used using CAN/LIN. In case our device does not support this car brand, a connection is used directly to the vehicle's sensors and actuators - tachometer/generator, injectors, engine oil pressure sensors, coolant level, etc.

The alarm is configured via USB - I use the STM32 USB CDC class, so on the computer side the device is defined as a regular com port, and you can work with it via any terminal.

Volume sensor – a standard external one is used, and as a tilt sensor, you can use an accelerometer in the device itself – for example, LIS203DL (the plus is that this accelerometer is installed on the stm32f4-discovery board and there are well-documented examples of working with it).

To implement the auto-start function in the case of a manual transmission, we must be sure that the car is not in gear. To do this, the user must either get out of the car and arm it without turning off the engine (arming with the engine running), or install reed switches on the gearbox.

Cameras on STM32F4 with external memory. They are connected to the main signaling unit via the RS-485 interface. The most optimal option is to place the cameras in the following way: the cameras operate in photo shooting mode. The STM32F4 microcontroller has a built-in synchronous parallel camera interface DCMI, which allows you to connect CMOS cameras up to 1 megapixel. Among others, it has a Snapshot mode, which is used. Using the direct memory access (DMA) mechanism, data from the camera is immediately placed in an external memory array connected via the FSMC interface of the microcontroller - while the computing resources of the core are not involved (Fig. 2.7.56).

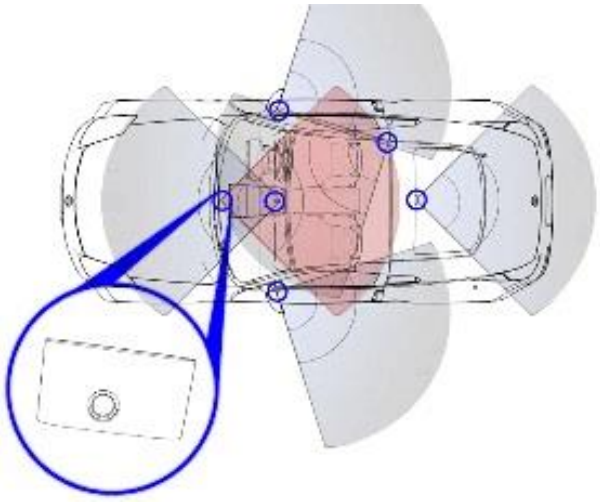

Figure 2.7.56 – Camera placement

After the frame recording is finished, we distill the data into JPEG format - then via RS-485 they are sent to the central unit and used to send to the system website and to form an MMS message with a photo (at the same time, there is no computational load on the STM32 microcontroller of the main alarm unit as such - we stupidly receive jpeg data from the cameras and send it further (to the server and in the form of mms) without processing it. The GSM modem is already involved in constructing the MMS message, and the OV7670 camera cannot transmit data with a frequency of less than 10 MHz + the data from it needs to be placed somewhere, therefore, for using cameras with conventional microcontrollers (as well as FPGAs), FIFO buffers are very often used, for example AL422B, the memory capacity of which is enough to store 1 frame of an image from the camera: The device of the main alarm unit The main components of the main unit are the stm32f103 microcontroller, GPS module, GSM module SIM900. GPS module.

In the process of monitoring potential threats, we will conditionally divide the car space into two areas.

The first area is the external perimeter of the vehicle, which will be monitored using the external action sensor block. This block also participates in providing service functions not directly related to vehicle protection.

The second area is the interior of the car, which in turn is monitored using the interior space control sensor unit.

Signals from both units are sent to the threat processing unit, which, in accordance with the threshold values set for each sensor, makes a decision on the level of threat to the protected object. The threat processing unit interacts with the central car alarm control unit. In the designed alarm system, the threat processing unit and the central car alarm control unit are separated inside the car and perform mutual monitoring of their functioning. If the alarm system malfunctions and one of the specified units fails, the other will give an alarm signal.

Three blocks are provided for organizing alarm and theft prevention functions.

The stationary alarm unit is designed to operate directly at the location of the protected vehicle by means of sound and light signaling to scare away the intruder and attract the attention of others. The unit operates in two modes according to the threat assessment. When deciding that it is unacceptable to be in the protected area, a warning signal is given, and when deciding that an intrusion is taking place, the local alarm unit turns on the alarm using all available alarm means.

Since at the time of an attempted theft or damage to the car, its owner may be outside the notification zone of the stationary notification unit. The designed car alarm also uses a remote threat notification unit. The result of this unit is the transmission of information in the GSM mode to the specified cellular subscriber.

The third device for combating car theft is the vehicle device control unit. The essence of this unit is to restore normal functioning of some vehicle components without damage. For example, in a car equipped with an automatic transmission, the latter can be blocked by a special controlled lock. The vehicle control unit can also interfere with normal engine operation by breaking the ignition circuits, etc.

The only device that can be used to gain access to a protected vehicle after it has been armed and the vehicle has been armed is the alarm control panel. This device is designed as a car key fob. As mentioned

earlier, organizing the protection of commands from the alarm control panel to the central transmission control unit is no less important than detecting and counteracting an intrusion. The alarm control panel also serves to perform additional service functions, such as opening doors and the trunk, remotely starting the engine for warming up, etc.

Signals from all of the above sensors are fed to a secondary microcontroller, which performs functions corresponding to the threat control unit.

The secondary microcontroller can remember the operating levels of the on-board network when the engine is started and off, and uses averaged data over several days to make a decision about turning off the power. This is protection against incorrect activation of the car alarm if the car is parked for a long time.

The secondary microcontroller is connected to the central microcontroller. In this case, the secondary controller transmits to the central one the codes corresponding to the state of the controlled sensors, and also monitors the state of the central microcontroller. If the operation of the central microcontroller is disrupted, the secondary one gives an alarm signal.

The central microcontroller controls such devices as the automatic transmission blocker, central locking, engine blocking unit and its start. The central microcontroller also decides on the level of threat to the protected vehicle and launches most of the protection and notification mechanisms.

Notification mechanisms include a conventional siren, a GSM module and transmission of the alarm status to the owner's radio key fob. Protection mechanisms include automatic transmission blocking and sending blocking signals to the engine blocking unit.

A transceiver is used to communicate with the owner's key fob. The functions of encrypting the transmitted codes are entrusted to the central microprocessor. The GSM module is used to notify the owner if the key fob is outside the transmission range of the transceiver.

The formation of control signals, processing of car alarm status codes, and encoding of transmitted information are carried out by a microcontroller.

The central microcontroller of the car alarm is constantly waiting for a change in the state of its inputs (occurrence of an event). When the state changes, their analysis occurs and the necessary procedure is called according to the specified program.

The only constant action during the wait is a periodic check of the mutual functioning between the central and secondary microprocessors of the car alarm.

As mentioned above, the central unit of the car security complex is responsible for the logic of the entire system. At a certain point in time, the central unit of the car security complex receives an input signal from the sensor or key fob via the receiving device (receiver).

Depending on the current operating mode and the received signal, the central control unit selects one or another programmed action.

In the modern world, users appreciate the ability to quickly upgrade their equipment – computers , mobile phones, cars, etc. The software of such devices is constantly updated and improved. Gadgets receive new features and functions.

Security and telematics equipment also belongs to devices that should be updated quickly and easily - according to the user's wishes and requests.

The basis of most modern car security systems is the progressive concept of space modular satellites. This concept allows you to implement the most daring ideas for property protection. If necessary, the developer can supplement the security system with CAN, GSM interfaces, GPS antenna or, conversely, eliminate unnecessary equipment, while also reducing the energy consumption of the entire system.

When adding a new module, there is no need to update the security system software, the installed module starts working immediately. Individual modules are sold as part of special kits: CAN, GSM, GPS, etc.

The modular architecture of security systems allows master installers to quickly and conveniently install security equipment, car owners to easily improve the security of their car, and manufacturers to develop and modernize individual modules.

However, with the development of technology, new, even more affordable ways to improve security equipment appear. Here it is worth mentioning the new concept of flexible architecture - software.

All key technologies are located on a single printed circuit board. However, it is worth noting that there are no connectors on it, which, in turn, increases the reliability of the equipment, and additional functions can be activated by purchasing not a module, but software. Thus, to improve the complex, you only need to update the software. And this is done quite easily and quickly. On the main unit of the security complex and on the additional key fob there are micro USB connectors, which are used to configure and

update the equipment via a computer.

In addition, all software can be updated via GPRS, including the CAN library, voice files, etc.

The central unit of the security complex (the brain of the system) processes input signals, including those from the key fob, and generates output signals. The security complex is controlled only by its own key fob, the code of which is stored in the memory of the central unit (Fig. 2.7.57).



Figure 2.7.57 – Central unit of the car security complex

When receiving a key fob signal, its belonging to this system is checked: whether the key fob code is recorded in the central unit.

The key fob with an LCD display (Fig. 2.7.58) is the main one and is used to control the security system, receive and display signals about the vehicle's status.

The key fob indicator displays the reasons for the activation of the security complex, accompanied by sound and vibration signals. The key fob uses a cursor method for selecting some control commands, which increases the convenience of using the security complex. The key fob with LED indication is used as a backup - only for controlling the complex.



Figure 2.7.58 – Keychains with LCD display

The receiver module provides communication between the key fobs and the central unit of the security complex. Like the two-way communication key fob, the module has a receiver and a transmitter. The "call" button allows you to call the two-way key fob from the cabin. In addition, the module board contains a three-axis accelerometer, which ensures the sensitivity of the security complex to impacts by the car body and its tilt.

The sensitivity of these sensors is adjusted remotely using a two-way key fob.

The main advantage of the latest developments is a reliable dialog code that protects against intelligent hacking (interception of control signals during disarming) and a flexible architecture that allows you to create several models on one platform that meet the needs of an individual car owner (Fig. 2.7.59).

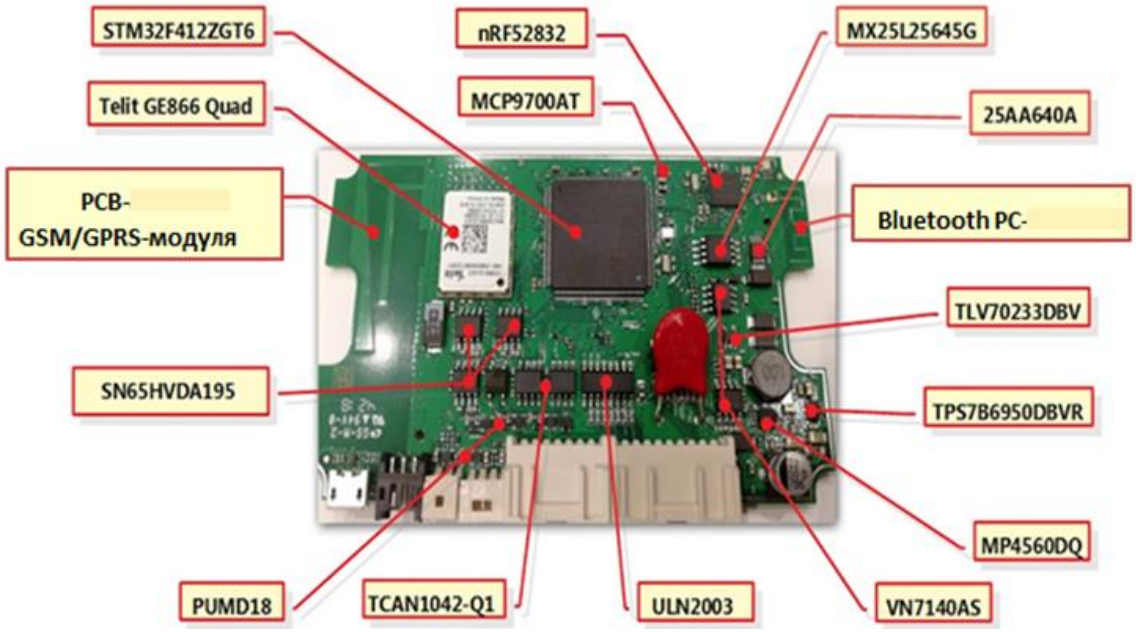

Figure 2.7.59 – Board of the central unit

The power supply of the central unit of the car security complex has protection against reverse polarity at the input, which is provided by Schottky diodes with a small voltage drop (Reverse blocking diode). Under this protection, there is also a separate power supply circuit (+12V) for the GSM module. In the lower right corner of the board there is a 22 μF electrolytic capacitor, which is designed to smooth out ripples from voltage surges, which are abundant in the car's on-board network. Then the voltage is "dispersed" through the power supply control devices (DC converter and linear voltage regulators), as well as to power the LIN transceivers.

MP4560DQ is a step-down DC converter (Step-Down Converter). Its main task is to convert/convert the voltage level in a pulse (switch) mode. Due to the principle of "as much as you took, as much as you gave", the high efficiency is primarily due to which it is about 95%. Given this, the remaining energy is not released as heat, therefore, there is no need to use bulky radiators, which in turn will affect the compactness of the device. The board implements voltage level control; if the input voltage is lower than the set threshold, the converter will not work, as will all components that depend on it. However, it was not without drawbacks in the form of noise generated at the output of the step-down converter, in connection with this, an additional linear stabilizer TLV70233DBV is used, which, in turn, finally stabilizes the power supply for the main components of the central unit.

TLV70233DBV is a linear voltage regulator (stabilizer) with a low voltage drop (220 mV) at the output (LDO). Among the features, one can highlight a high power supply instability rejection ratio (PSRR), which is very important in conjunction with the MP4560DQ converter.

There are two TLV70233DBV regulators on the board, one of them is designed to power the external navigation module. The second one powers the main components of the board – the microcontroller, sensors, memory chips, etc. The output stable voltage is – 3.3 V. The maximum current is – 300 mA. The quiescent current of the entire link I_q is – 175 μA or 0.000175 A.

The pulsed-linear power supply architecture provides undeniable advantages in the form of minimal heat generation and stable output voltage.

TPS7B6950DBVR is another linear voltage regulator with a small dropout at the output (LDO). The maximum current of this regulator is 150 mA. Among the features, one can highlight a record low maximum quiescent current of 25 μA. Its task is to provide 5-volt power to CAN bus transceivers. The output stable voltage is 5 V. The maximum current is 150 mA. The quiescent current of the regulator I_q is 25 μA.

VN7140AS is a single-channel driver for powering high-current loads. One of the features of 6th generation car alarms is the ability to connect loads with a current of up to 2A. To implement this idea, the latest high-current drivers with intelligent protection against overload, short circuit, overheating and other factors that affect the reliability and smooth operation of the entire system are used. There are two drivers on the board, each of which is responsible for its own load (2A), by default it is either a siren or DVR control. It is also possible to use any other types of loads (active, inductive, etc.) with the possibility of using flexible

logic programs.

Despite the fact that today's 6th generation car alarms have modern technical solutions for power protection, the installation and configuration of such car alarms should still be carried out by a specialist.

The central microcontroller of the 6th generation car alarm has a monoblock architecture, unlike other car alarms with a modular architecture, where separate microcontrollers are responsible for the operation of individual modules. The central unit under consideration has one powerful STM32F412ZGT6 microcontroller and it is located in the center of the main unit board. STM32F412ZGT6 is the brain of the security complex. The microcontroller is based on a 32-bit RISC-core ARM Cortex M4 with an operating frequency of up to 100 MHz and has a built-in FLASH memory of 1 MB. Obviously, this memory is not enough for a smart car alarm, so additional external memory chips are "connected" to the board, where the main program is stored.

MX25L25645G memory is a multi-protocol Flash memory (NOR, ROM) with support for double-speed data transfer (DTR) mode. It stores the security system firmware.

25AA640A – EEPROM memory chip. Since the STM32F microcontroller does not have a built-in EEPROM memory. For this reason, external memory is used, operating via SPI Bus (serial peripheral interface). This memory is needed to work with variable data, since it is necessary to regularly change/rewrite the values contained in the bits, and EEPROM has just such an opportunity. Among the features of this memory, one can highlight low consumption in read/write mode – 5 mA. At the same time, the resource is more than 1 million "erase/write" cycles. Memory capacity – 64 Kbit. Clock frequency – 10 MHz Interface – Serial Peripheral Interface (SPI).

Digital Buses Car alarms of the first generations used analog transmission lines with a certain potential (+/-) to collect information about the state of the car, as well as to control various devices. The disadvantage of such alarms is limited functionality with significant material costs. This disadvantage was corrected by the introduction of new digital communication standards in the field of automotive security devices. Today, modern 6th generation car alarms support several automotive digital data transmission buses (CAN, LIN, etc.). Unlike traditional analog lines, a digital bus is able to transmit more information (the state of the doors, hood, trunk, interior temperature, etc.) at the same physical level (number of conductors) as an analog one. A one- or more-wire circuit is used to exchange information. Usually, an automotive digital bus cannot be directly connected to a microcontroller, otherwise the microcontroller ports will fail due to high edges or even interference. For this reason, before the data reaches the microcontroller, they undergo post-processing in devices called transceivers (transceiver is a physical network layer receiver or a driver for accessing the digital bus). Another feature of such devices is protection. The fact is that in the transceiver the signals are galvanically isolated, and if a failure occurs in the car bus, this will not harm the car alarm system itself. In addition, the transceiver plays the role of a filter, if there is interference in the digital bus, the transceiver supplies a filtered signal (Rx) to the microcontroller and back (Tx).

In modern car alarms, there are several transceivers, made in the form of a "system on a single chip" or, more simply, a microcircuit. And each such microcircuit is responsible for its own data bus: TCAN1042 - CAN bus transceiver. Among the features of the microcircuit, we can highlight a separate power supply for the Rx and Tx output levels, which is equal to the power supply of the microcontroller. As well as an energy-efficient solution - standby mode (Standby Mode), controlled by the microcontroller. If the bus is not used, the microcircuit goes into a reduced power consumption mode (standby mode). Most of the time the transceiver is in this mode.

It should be noted that there are two such chips on the main signaling unit board, and each is designed for a specific data bus – MS CAN or HS CAN, for example.

The digital CAN bus is used to receive information from and control vehicle devices. The SN65HVDA195 is a LIN bus transceiver or a bus with a single-wire data transmission interface.

Two other chips are responsible for data processing (in the alarm system they are designated as LIN A and LIN B). Depending on the car model, car alarm manufacturers most often use this line to work with standard anti-theft systems or otherwise - immobilizers, in particular to simulate the operation of a transponder. Less often, this line is used for the operation of functions related to comfort (power windows, etc.).

In a bundle of two transceivers, depending on the alarm software, an electronic opto-relay CPC1117N can operate, which works as a signal switch between the imitation of a transponder key (during autostart) and the regular operation of the immobilizer system. The opto-relay CPC1117N itself is not indicated in the photo; it is located on the board between the CAN and LIN transceivers and has a four-pin housing.

2.8 Electric power plants for vehicles

2.8.1. Comparison of internal combustion engine and electric motor for vehicle powertrain

The propulsion system is the heart of the electric vehicle, and the electric motor is located right in the center of the system. The electric motor converts electrical energy from the battery into mechanical energy, which allows the vehicle to move. It also works as a generator during regenerative braking, which sends energy back to the source, Fig. 2.8.1.

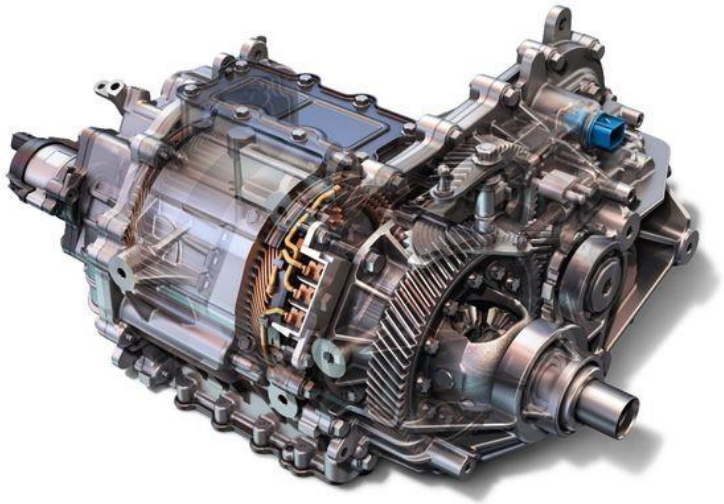

Figure 2.8.1 – Electric motor Chevrolet Bolt

The electric motor converts electrical energy from the battery into mechanical energy, which allows the vehicle to move. It also works as a generator during regenerative braking, which sends energy back to the source.

But not everything is as simple as it seems. Electric motor is extremely efficient, only 5% of the energy is lost. You should agree that this power must be curbed and you should be able to handle it, and for this you need to know some peculiarities of the work and the types of electric motors.

ICE vs Electric motor

If we compare electric motors with internal combustion engines (ICE), we immediately need to note a number of their significant advantages:

1) The electric motor consists of much fewer parts, unlike ICE. This directly indicates the high reliability of electric motor in comparison with the internal combustion engine, Fig. 2.8.2.

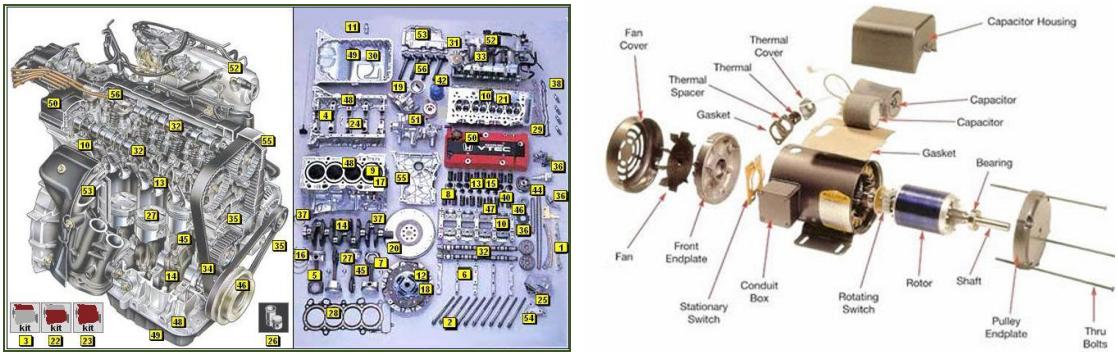

Figure 2.8.2 – Compare electric motors with internal combustion engines

2) The engine torque reaches its maximum immediately when it is turned on, thus, electric cars do not require the presence of starters and gearboxes typical for ICE, Fig. 2.8.3.

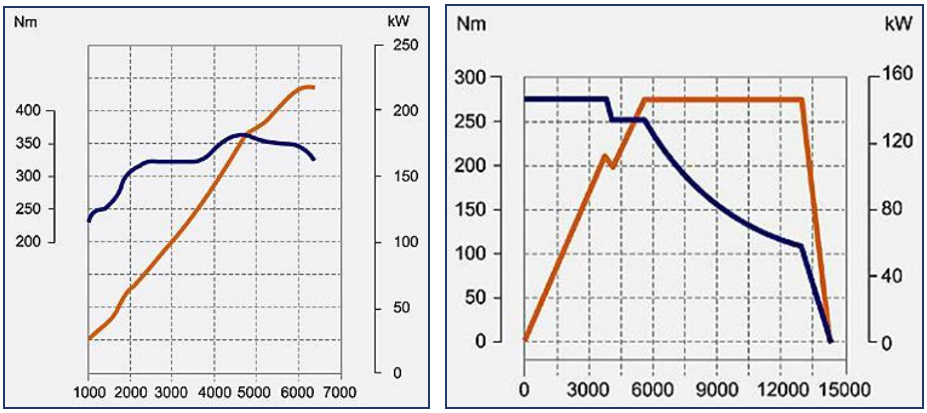

Figure 2.8.3 – ICE Vs Electric motor: torque and power

3) The operation of the electric motor at different speeds (from 0 to 18000 rpm) with high efficiency allows the electric car to do without a gearbox. To reverse the engine, i.e. to turn on the reverse, it is enough to change the polarity (for DC motors) or phase rotation (for AC motors), Fig. 2.8.4.

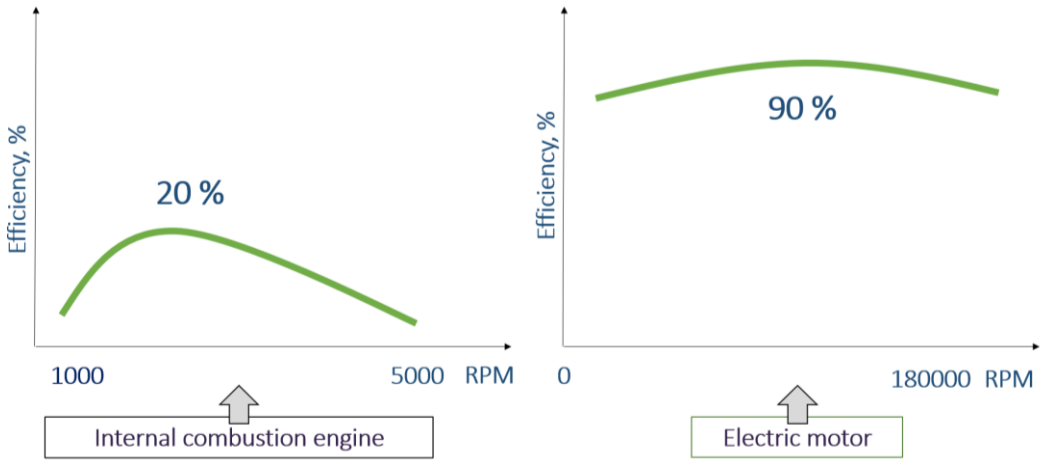

Figure 2.8.4 – ICE Vs Electric motor: speed range

4) The specific energy parameters of the electric motor are much higher than that of the internal combustion engine, Table 2.8.1

Table 2.8.1 – ICE vs Electric motor: specific parameters

Parameters	Typical IC engine	Tesla – induction motor
Weight	≈ 180 kg	31.8kg
Power	≈ 140 kW	270 kW
Weight/Power	≈ 0.8 kW/kg	8.5 kW/kg

However, it is necessary to understand that it is not safe to start an electric vehicle from the entire potential of torque, which is much more powerful than many cars with internal combustion engines, and this causes inefficient battery consumption.

Electric motors can be classified by the type of current, Fig. 2.8.5:

–AC motors;

–DC motors;
–Combined engines.

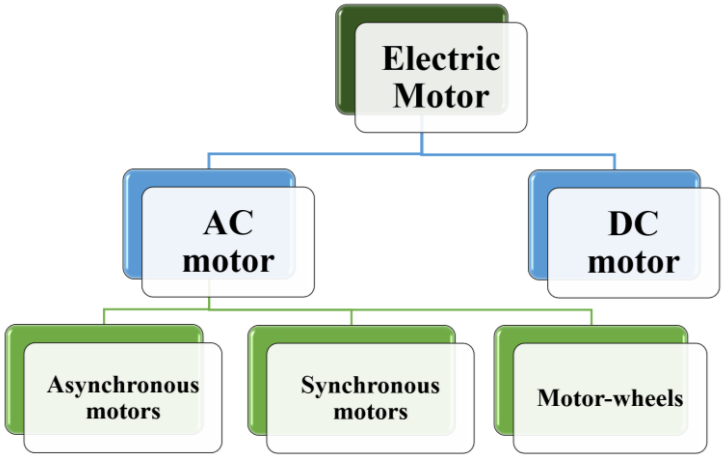

Figure 2.8.5 – Classification of electric motors

2.8.2. Equation of the Mechanical characteristic of an Induction motor

Induction motors (IM) have found widespread industrial applications due to several significant advantages over other types of motors. The induction motor is simple and reliable in operation, as it lacks a commutator. Induction motors are also cheaper and significantly lighter than DC motors.

A three-phase IM includes a stator winding connected to a three-phase IM network with voltage U_1 and frequency f_1, and a rotor winding, which can be implemented in two designs (Fig. 2.8.6).

First Design: This involves a conventional three-phase winding made of conductors with terminals on three slip rings. Such a construction corresponds to an IM with a wound rotor (Fig. 2.8.6,a) and allows for various electrical elements, such as resistors, to be included in the rotor circuit to regulate speed, current, and torque. Special connection schemes can also be implemented for the same purposes.

Second Design: The rotor winding is created by casting aluminum into the rotor slots, resulting in a structure known as a "squirrel cage". The schematic of an IM with this winding, which has no terminals and is referred to as a squirrel-cage rotor, is shown in Fig. 2.8.1,b.

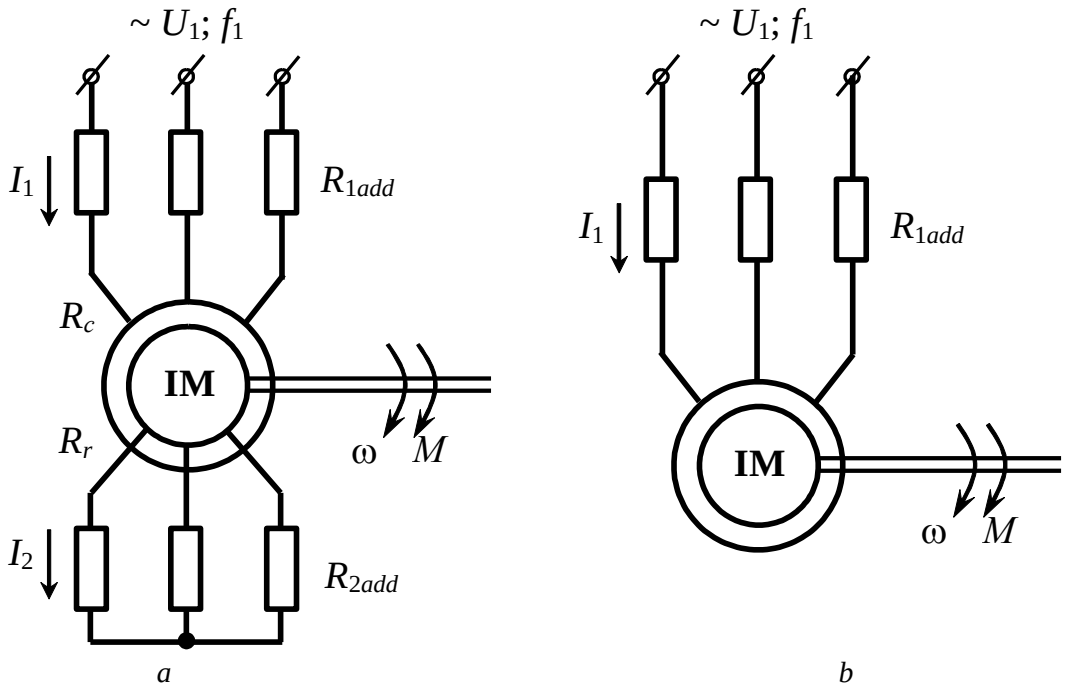

Figure 2.8.6 – IM switching diagram with a phase rotor (*a*) and a short-circuited rotor (*b*)

To derive expressions for the electromechanical and mechanical characteristics of an IM, its equivalent circuit is used, where the stator and rotor circuits are represented by their active and inductive resistances. A unique feature of the IM equivalent circuit is that the current, EMF, and rotor circuit parameters are converted (referred) to the stator circuit. This allows these two circuits to be depicted as electrically connected in the schematic, even though their actual connection is through the electromagnetic field.

Conversion is performed using the IM transformation coefficient for EMF

$$k = \frac{E_1}{E_2} \approx \frac{0{,}95U_{f.nom}}{E_{2k}}, \tag{2.8.1}$$

Where:

E_1 and E_2 – are the phase EMFs of the stator and rotor at standstill;

$U_{f.nom}$ is the phase nominal network voltage.

The calculation formulas for reduction have the following form

$$E_2' = E_2 k = E_1;\ I_2' = \frac{I_2}{k};\ R_2' = R_2 k^2 X_2' = X_2 k^2, \tag{2.8.2}$$

Where the dash indicates the reduced values.

In the theory of electrical machines, two main equivalent circuits of an induction motor are developed and applied: the more precise T-shaped and the simplified П-shaped. Fig. 2.8.7 presents the П-shaped equivalent circuit, which is further used to derive formulas for the characteristics of an induction motor.

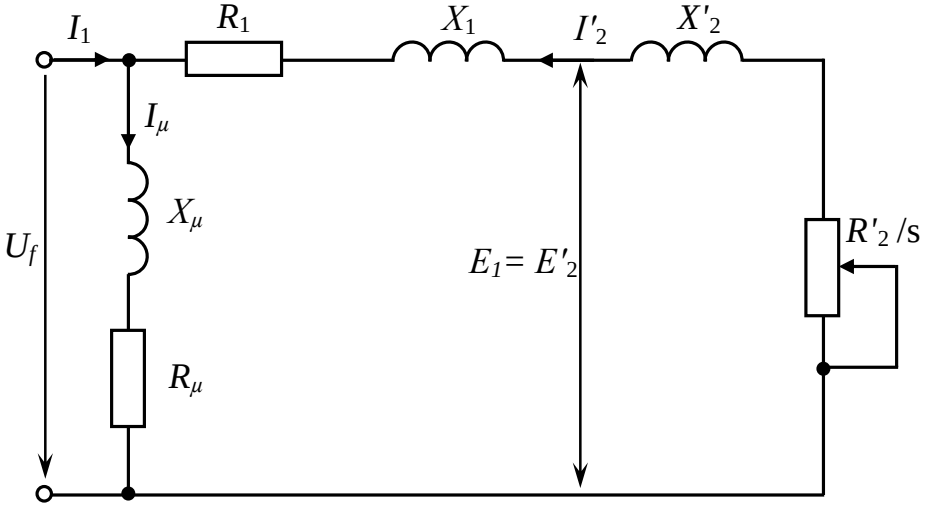

Figure 2.8.7 – IM replacement diagram

In the diagrams (Fig. 2.8.6 and 2.8.7), the following notations are adopted:

U_1, U_f are the effective values of the line and phase voltages of the network;

I_1, I_μ, I'_2 are the phase currents of the stator, magnetizing current, and the referred rotor current;

X_1, X'_2 iare the inductive reactances due to leakage fluxes of the stator winding phase and the referred rotor phase;

X_μ is the inductive resistance of the magnetizing circuit;

R_μ is the active resistance of the magnetizing circuit;

R_c, R_{1add}, $R_1 = R_c + R_{1add}$ are the active phase resistances of the stator winding, additional resistor and total stator resistance;

R'_r, R'_{2add}, $R'_2 = R'_r + R'_{2add}$ are the active phase resistances of the rotor winding, additional resistor and total rotor resistance reduced to the stator winding;

$s = \frac{\omega_0 - \omega}{\omega_0}$ is the slip of the IM motor;

$\omega_0 = \frac{2\pi f_1}{p}$ is the angular velocity of the IM magnetic field (synchronous speed);

f_1 is the frequency of the supply voltage;

p is the number of pairs of AC poles.

As can be seen from the diagram, the stator EMF is equal to the reduced rotor EMF, and the magnetizing current I_μ, which determines the magnetic flux IM, flows under the action of U_f along a certain circle consisting of the resistances of the magnetizing circuit X_μ and R_μ, and is the vector sum of the stator and reduced rotor currents, i.e. $I_\mu = I_1 + I'_2$.

According to the given equivalent circuit, we can obtain an expression for the secondary current

$$I'_2 = \frac{U_f}{\sqrt{\left(R_1 + \frac{R'_2}{s}\right)^2 + (X_1 + X'_2)^2}}. \quad (2.8.3)$$

The torque of an induction motor can be determined from the loss expression, from which

$$M = \frac{3(I'_2)^2 R'_2}{\omega_0 s}. \quad (2.8.4)$$

Substituting the current value I'_2 into (2.8.4), we obtain

$$M = \frac{3U_f^2 R'_2}{\omega_0 \left[\left(R_1 + \frac{R'_2}{s}\right)^2 + (X_1 + X'_2)^2\right] s}, \quad (2.8.5)$$

The torque curve $M = f(s)$ has two maxima: one in the generator mode, the other in the motor mode (with significant rotor resistances, the maximum torque may be in the anti-lock braking mode).

By equating, we determine the value of the critical slip s_{cr} at which the motor develops the maximum (critical) torque

$$s_{cr} = \pm \frac{R'_2}{\sqrt{R_1^2 + (X_1 + X'_2)^2}}. \quad (2.8.6)$$

Substituting the value of s_{cr} into (2.8.5), we find the expression for the maximum moment

$$M_{cr} = \frac{3U_f^2}{2\omega_0 \left[R_1 \pm \sqrt{R_1^2 + (X_1 + X'_2)^2}\right]}. \quad (2.8.7)$$

The "+" sign in equations (2.8.6) and (2.8.7) refers to the engine mode (or braking by counter-switching), the "–" sign to the generator mode of operation in parallel with the network (at $\omega > \omega_0$).

If expression (2.8.5) is divided into (2.8.7) and the corresponding transformations are performed, we can obtain

$$M = \frac{2M_{cr}(1 + as_{cr})}{\frac{s}{s_{cr}} + \frac{s_{cr}}{s} + 2as_{cr}}, \quad (2.8.8)$$

Where:
M_{cr} is the maximum engine torque;
s_{cr} is the critical slip corresponding to the maximum moment;

$$a = \frac{R_1}{R_2'}.$$

Here it is necessary to emphasize a very important circumstance for practice – the influence of changes in the mains voltage on the mechanical characteristics of the IM. As can be seen from (2.8.5), at a given slip, the motor torque is proportional to the square of the voltage, therefore, a motor of this type is sensitive to fluctuations in the mains voltage.

2.8.3. Mechanical characteristics of an Induction motor

The critical slip and angular velocity of ideal idling do not depend on voltage.
Fig. 2.8.8 shows the mechanical characteristic of the IM.
Its characteristic points:
1) $s = 0$; $M = 0$, while the engine speed is equal to the synchronous speed;
2) $s = s_{nom}$; $M = M_{nom}$, corresponding to the rated speed and rated torque;
3) $s = s_{cr}$; $M = M_{cr,M}$, maximum torque in motor mode;
4) $s = 1.0$; $M = M_{In.} = \frac{2M_{cr}\left(1+as_{cr}\right)s_{cr}}{1+s_{cr}^2\left(1+2a\right)}$ – the initial starting moment;
5) $s = -s_{cr}$; $M = M_{cr,G}$ – maximum torque in generator mode of operation in parallel with the network.
When $s > 1.0$, the motor operates in the braking mode by counter-switching, when $s < 0$, the generator mode of operation in parallel with the network (regenerative braking) takes place.

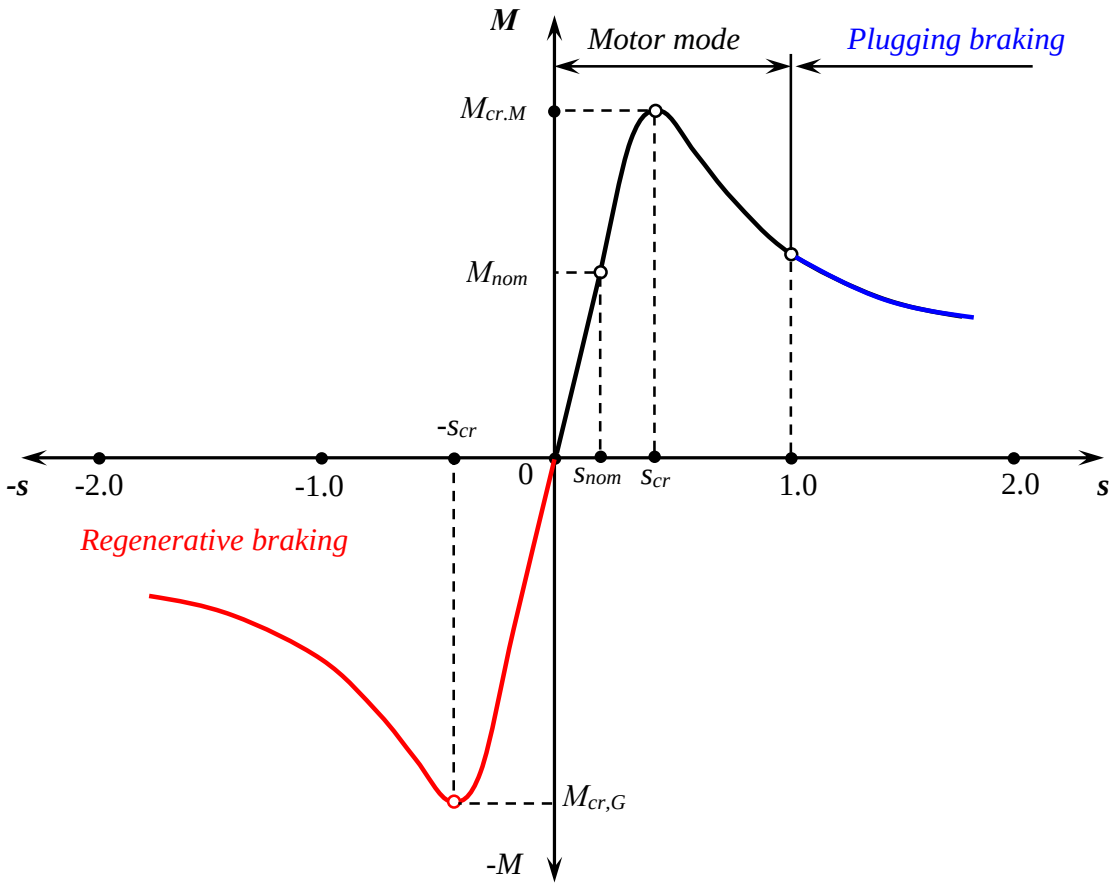

Figure 2.8.8 – Mechanical characteristics of an induction motor

It should be emphasized that the absolute values in the motor mode and the generator mode in parallel with the network are the same.

However, it follows from (2.8.7) that the maximum torques in the motor mode and the generator mode are different. In the generator mode of operation in parallel with the network, the maximum torque in absolute value is greater, which follows from the relation:

$$M_{cr.G} = M_{cr.M} \frac{R_1 + \sqrt{R_1^2 + X_k^2}}{R_1 - \sqrt{R_1^2 + X_k^2}}, \quad (2.8.9)$$

Where:

$$X_k = X_1 + X_2'.$$

If we neglect the active resistance of the stator in equation (9.8), we get a formula that is more convenient for calculations:

$$M = \frac{2M_{cr}}{\frac{s}{s_{cr}} + \frac{s_{cr}}{s}}, \quad (2.8.10)$$

Where:

$$s_{cr} = \pm \frac{R_2'}{X_k}; \; M_{cr} = \frac{3U_f^2}{2\omega_0 X_k}$$

Substituting into expression (9.10) instead of the current values of M and s their nominal values and denoting the multiplicity of the maximum moment $\frac{M_{cr}}{M_{nom}}$ by λ – overload capacity, we obtain

$$s_{cr} = s_{nom}\left(\lambda + \sqrt{\lambda^2 - 1}\right). \quad (2.8.11)$$

Analysis of formula (2.8.10) shows that when $s > s_{cr}$ (non-working part of the characteristic), the equation of a hyperbola will be obtained if in this case the second term of the denominator in equation (2.8.10) is neglected, i.e.

$$M = 2M_{cr}\frac{s_{cr}}{s}, \quad (2.8.12)$$

or

$$M = A/s, \quad (2.8.13)$$

Where:

$$A = 2M_{cr}s_{cr}.$$

This part of the characteristic practically corresponds only to the starting and braking modes.

For small values of slip ($s < s_{cr}$) for $M = f(s)$ the equation of the straight line will be obtained if the first term in the denominator (2.8.10) is neglected

$$M = 2M_{cr}\frac{s}{s_{cr}}, \quad (2.8.14)$$

or

$$M = B \cdot s, \quad (2.8.15)$$

Where:

$$B = \frac{2M_{cr}}{s_{cr}}.$$

This linear segment of the characteristic represents its operational range, within which the motor operates in a steady state. On this segment, points corresponding to the motor's nominal parameters-nominal torque (M_{nom}), nominal current (I_{nom}), nominal speed (n_{nom}), and nominal slip (s_{nom}) are located. The static speed drop (Δn) in relative units on the natural mechanical characteristic of an induction motor at nominal torque is determined by its nominal slip.

The value of nominal slip depends on the rotor resistance. Induction motors with squirrel-cage rotors of standard design typically exhibit the lowest nominal slip for a given power and number of poles. Due to their design features, these motors have relatively low rotor resistance, leading to reduced values of critical slip (s_{cr}) and nominal slip (s_{nom}). For the same reasons, as the motor's power increases, its nominal slip decreases, and the stiffness of its inherent mechanical characteristic increases. This is illustrated by the curve in Fig. 2.8.9, constructed based on average data for motors of various power ratings.

The magnitude of the critical moment, as can be seen from (2.8.7), does not depend on the active resistance of the rotor, while the critical slip according to (2.8.6) increases as the rotor resistance increases. As a result, in motors with a phase rotor, when resistors are introduced into the rotor circuit, the maximum of the torque curve shifts towards large slips.

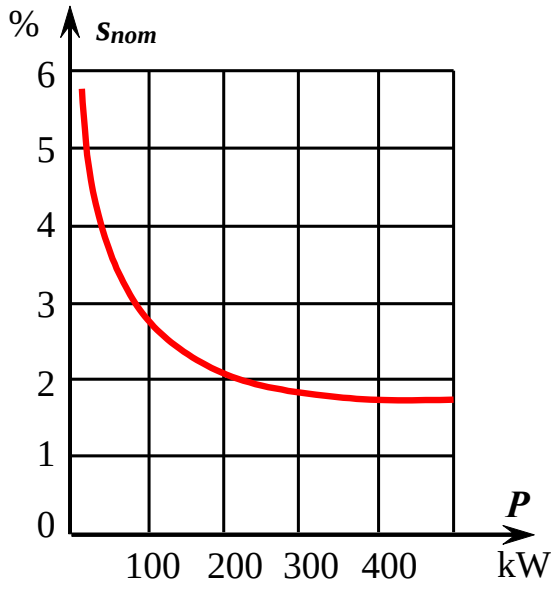

Figure 2.8.9 – Nominal slip curve for IM of different capacities

The value of the resistance required to construct the natural and rheostatic characteristics of a motor with a phase rotor is determined from the expression:

$$R_2 = \frac{s_{nom} E_{2k}}{\sqrt{3} I_{2nom}}, \qquad (2.8.16)$$

Where:

E_{2k}, I_{2nom} – is the linear voltage at a stationary rotor and the rated rotor current.

Fig. 2.8.10 shows a family of rheostat characteristics in the engine mode in the coordinate axes M and ω for different values of the resistances of the rotor circuit. With a known approximation, the rheostat characteristics in their working part can be assumed to be linear. This makes it possible to use methods similar to those used to calculate the resistance of the armature circuit of a IM with independent excitation when calculating the resistance of the armature circuit of a DC motor. Some inaccuracy in determining the

resistor resistance is introduced due to the fact that the characteristic of the IM in the section of the graph from $M = 0$ to the maximum torque at start-up is considered linear.

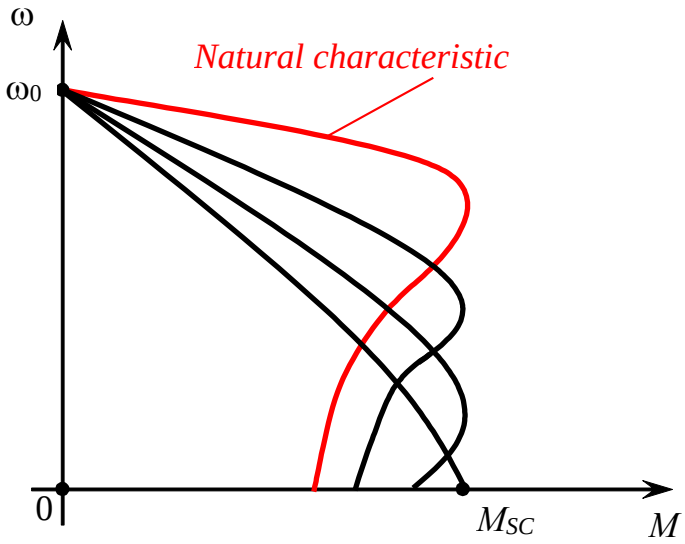

Figure 2.8.10 – Intrinsic and rheostatic mechanical characteristics of an IM motor with a phase rotor

More accurate is the method when the characteristics are rectified over a smaller area. The maximum torque factor through $\lambda = \frac{M_{cr.M}}{M_{nom}}$ should be at least 1.8 for normal motors with a phase rotor, and at least 1.7 for motors with a squirrel-cage rotor. Crane motors are distinguished by a higher maximum torque factor. For example, for motors with a squirrel-cage rotor of the MTK series $\lambda = 2.3 \div 3.4$. Motors with a phase rotor of the mentioned series have approximately the same values of λ.

For motors with a squirrel-cage rotor, the factors of the initial starting torque and the initial starting current are of significant importance from the point of view of the electric drive.

2.8.4. Connection scheme and Mechanical characteristic of a Synchronous motor

Synchronous motors, if they operate at a constant frequency with unchanged angular velocity, are used for drives that do not require speed regulation. Such drives include compressors, refrigeration machines, stone crushers, and others. The main advantage of a synchronous motor lies in its ability to operate with a high-power factor, leading to its increasingly wide application.

The angular velocity of a synchronous motor (Fig. 2.8.11, b) during steady-state operation, as the load on the shaft increases up to a certain value not exceeding the maximum torque M_{max}, remains constant and equal to the synchronous angular velocity

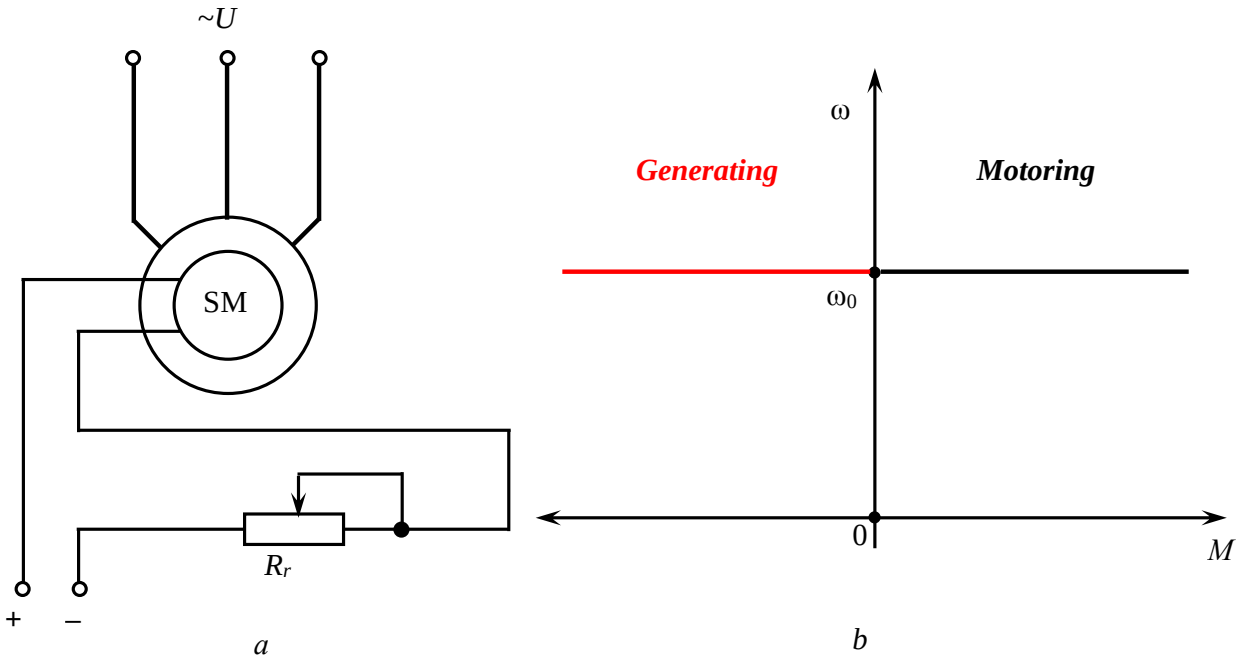

Figure 2.8.11 – Connection scheme (a) and mechanical characteristic (b) of a synchronous motor

$$\omega_0 = \frac{2\pi f_1}{p}. \qquad (2.8.17)$$

Therefore, its mechanical characteristic is a straight line parallel to the horizontal axis. If the load torque exceeds M_{max}, the motor may lose synchronism, disrupting the dependency shown in Fig. 2.8.11, b.

2.8.5. Starting characteristics of a Synchronous motor

Modern synchronous motors have a special starting squirrel-cage winding in addition to the normal working winding, which is powered by direct current. This starting winding enables the motor to start as an induction motor, and thus, it possesses an induction characteristic during starting. Fig. 2.8.12 shows two starting characteristics of a synchronous motor. One of them (curve 1) corresponds to a start with reduced initial starting torque M_{st} and a significant "entry torque" M_{en1}, defined as the torque developed at a speed of approximately 0.95 of synchronous speed. At this speed, synchronization becomes possible after connecting direct current to the excitation winding

If the starting cage has increased active resistance, the initial starting torque M_{st2} will be higher than in the previous case, while the entry torque M_{en2} will be lower (curve 2 in Fig. 2.8.12). The choice between the two starting characteristics depends on the resistance torques of the industrial mechanisms.

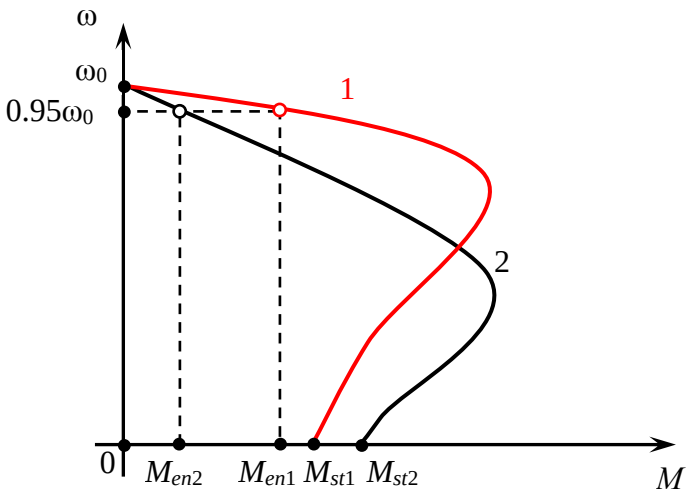

Figure 2.8.12 – Starting characteristics of a synchronous motor

2.8.6. Angular Characteristic of a Synchronous motor. Operating modes of a Synchronous motor

Under pulsating load conditions on the motor shaft during steady-state operation, the instantaneous speed fluctuates around its average value. These fluctuations occur due to changes in the angle between the voltage and the EMF of the synchronous machine. Speed fluctuations are significant when a synchronous motor is used with a pulsating load, such as a reciprocating compressor. To ensure stable motor operation in such cases, it is necessary to understand the relationship between torque M and the angle θ (in degrees) between the voltage and the EMF. This angle corresponds to the spatial displacement angle between the machine's resultant field axis and the pole axis (spatial angle θ is p times smaller than the electrical angle θ). The relationship between the torque of a synchronous machine and the angle θ is known as the angular characteristic

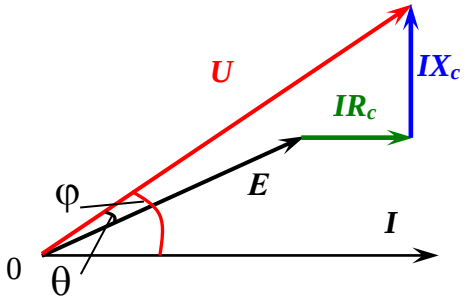

Figure 2.8.13 – Simplified vector diagram of a synchronous motor

To find the angular characteristic, consider the simplified vector diagram of a non-salient pole machine, shown in Fig. 2.8.13. Neglecting losses in the active resistance of the stator $R_c = 0$ (Fig. 2.8.13), the power supplied to the synchronous motor can be assumed to be equal to the electromagnetic power, W

$$P = 3IU \cdot \cos\varphi, \text{ W} \tag{2.8.18}$$

Where:
I and U are the phase current and voltage of the stator.
From the vector diagram (Fig. 2.8.14), it follows that

$$U \cdot \cos\varphi = E\cos(\varphi - \theta). \tag{2.8.19}$$

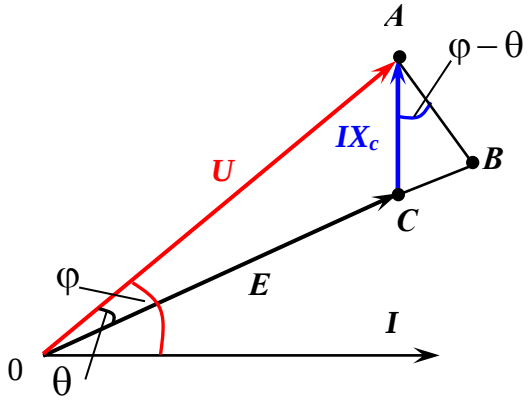

Figure 2.8.14 – Simplified vector diagram of a synchronous motor, neglecting losses in the stator's active resistance

From the consideration of the auxiliary triangle ABC it is clear (Fig. 2.8.14) that

$$\cos(\varphi-\theta)=\frac{AB}{AC}=\frac{U\sin\theta}{IX_c}.$$

Therefore

$$U\cdot\cos\varphi=EU\frac{\sin\theta}{IX_c}. \tag{2.8.20}$$

Now, substituting the obtained expression into equality (2.8.18) and replacing the angle φ with the angle θ, we obtain the equation of electromagnetic power:

$$P=3EI_{sc}\sin\theta,\ \text{Вт} \tag{2.8.21}$$

Where:

I_{sc} is the short circuit current

$$I_{sc}=\frac{U}{X_c}. \tag{2.8.22}$$

Then the electromagnetic moment:

$$M=\frac{P}{\omega_0}=\frac{3}{\omega_0}EI_{sc}\sin\theta. \tag{2.8.23}$$

In the case of a salient-pole machine, an additional reactive moment appears. However, for practical calculations, it can be neglected and formula (2.8.23) can be used.

When $\theta=90^0$ the moment has a maximum value

$$M_{\max}=\frac{3}{\omega_0}EI_{sc}. \tag{2.8.24}$$

Therefore, the angular characteristic equation takes the following form:

$$M=M_{\max}\sin\theta. \tag{2.8.25}$$

As the load increases, the angle θ also increases. From equation (2.8.25), it is evident that, initially, as θ grows, the torque developed by the motor increases (Fig. 2.8.15), which meets the conditions for stable motor operation. On the right side of the graph, when $\theta>90^0$, the condition for stable motor operation is violated because, with increasing load, θ continues to increase, while the developed torque decreases, causing the motor to lose synchronism. The left portion of the characteristic is the working part, while the right portion, where θ changes from 90^0 to 180^0, is the unstable part of the characteristic.

The nominal torque M_{nom} of the motor corresponds approximately to $\theta=30^0$. In this case, the ratio of the maximum torque to the nominal torque is

$$\lambda=\frac{M_{\max}}{M_{nom}}=2\div2.5.$$

However, in special cases, synchronous machines with a higher ratio of maximum to nominal torque, reaching 3.5–4, are sometimes selected.

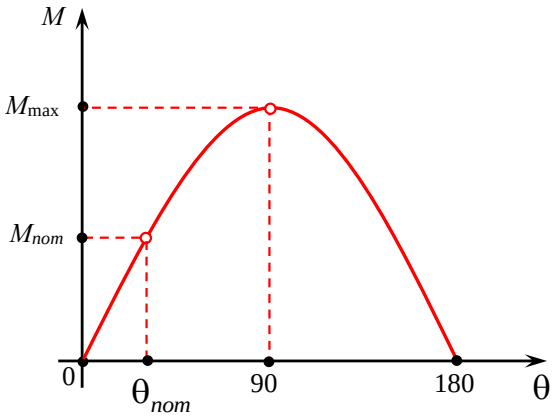

Figure 2.8.15 – Angular characteristic of a synchronous motor

A synchronous motor can also operate in generator mode, delivering energy back to the grid at synchronous speed when the load torque on the shaft is negative. This corresponds to the left branch of the characteristic in Fig. 2.8.11, b.

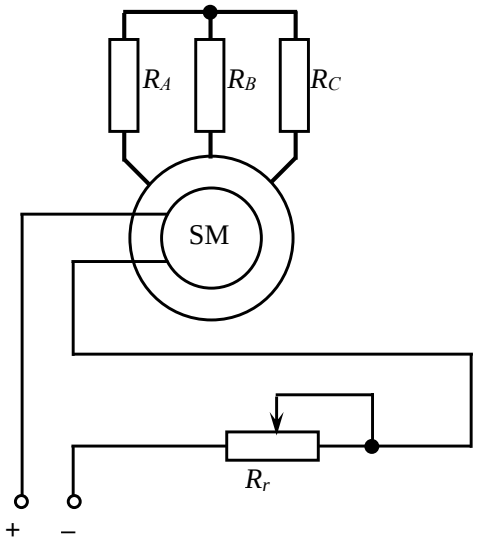

Figure 2.8.16 – Schematic diagram of a synchronous motor during dynamic braking

For braking purposes, this mode has little practical significance since it does not allow speed reduction. Dynamic braking of a synchronous motor is commonly used, during which the stator winding is disconnected from the grid and short-circuited through a resistor (Fig. 2.8.16). The mechanical characteristics in this case resemble those of an induction motor during dynamic braking (Fig. 2.8.17). The braking intensity depends on the resistance of the stator circuit and the magnetic flux created by the rotor winding current. The braking time, when the excitation circuits are powered by a self-excited generator located on the shaft of the synchronous motor, is longer than when powered by an independent DC source. This is because, as the rotation speed of the exciter decreases, its EMF also decreases, reducing the excitation current and the braking torque.

Braking of a synchronous motor via counter-current is rarely used because it is accompanied by large current surges and complicates control apparatus due to the necessity of disconnecting the motor when approaching zero speed.

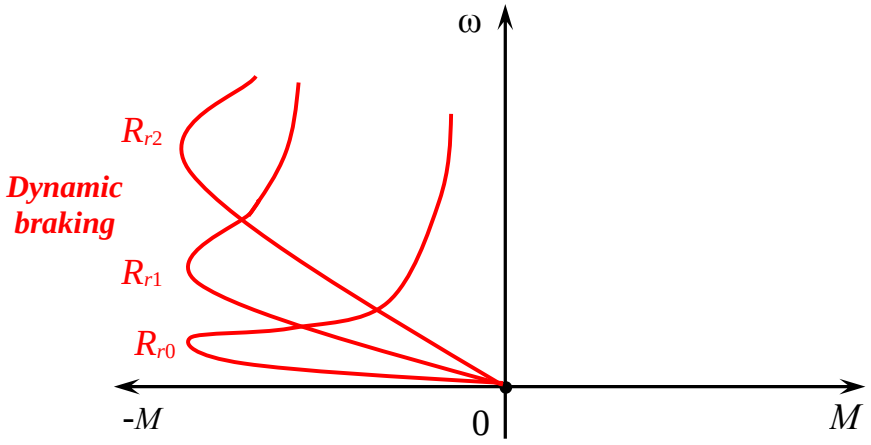

Figure 2.8.17 – Mechanical characteristics of a synchronous motor in dynamic braking mode

2.8.7. The motor-wheel

The motor-wheel is a contactless electric motor in which the rotor, not the stator, rotates. The stator is also the rim of the wheel, Fig. 2.8.18.



Figure 2.8.18 - Diagram of a gearless motor for vehicles

High efficiency is a characteristic feature of such a low-speed, but high-torque motor.

Distinctive features of the motor-wheel:

- Gearless valve electric motor built into the wheel hub;
- High-eructive permanent magnets based on liquid metals;
- High specific torque;
- Use of composite materials and alloys.

So, the advantages of the motor-wheel are as follows. Firstly, the absence of a gear unit ensures high reliability and, consequently, a longer service life. Secondly, the controlled speed of rotation of the motor-wheel, which is achieved using a programmed microprocessor or personal computer that controls the speed and direction. Thirdly, increased smoothness of movement due to the fact that the absence of a reducer allows the motor to rotate without a discrete step with very high accuracy. Finally, this electric drive has almost absolutely silent operation due to the use of new materials.

2.8.8. Hub Asynchronous Traction motor with External rotor for driving the motor-wheel

The equipment of this type of engine can be considered on the example of a traction drive used in a low-floor tram manufactured by the German company ABB Henschel (now part of Bombardier).

This drive is based on a three-phase asynchronous motor with an external rotor and liquid cooling, which drives one wheel (Fig. 2.8.19)



Figure 2.8.19 - General view of the hub drive with brake disc

The drive concept is characterized by the fact that the rotor speed of the traction motor is equal to the wheel speed. This eliminates the need for a gearbox. This design provides a reduced noise level and significantly lower operating costs compared to a classic drive.

Design

The stator in the hub induction traction motor is located inside. The stator consists of the following elements (Fig. 2.8.20):

–a stationary hollow shaft with a pipe forming a cooling jacket (7);

–a charged magnetic core with clamping rings (6);

–a stator winding with connectors, current leads and a plug connector for connection (5, 8);

–axial bearing sealing elements.

Through the hollow motor shaft with a cooling pipe welded to it, the liquid is supplied to the stationary parts of the traction motor. The magnetic core is attached to the cooling pipe with screws and is fixed in the longitudinal direction with the help of two rings. The stator winding is placed in the grooves of the magnetic core and is connected to the plug connector by current leads.

The rotor structure consists of:

–a housing tube with winding slots (1);

–rods and short-circuited winding rings, (3);

–rotating bearing shields (4).

The housing tube, made of improved steel, has internal slots in which the rods forming the short-circuited winding are located.

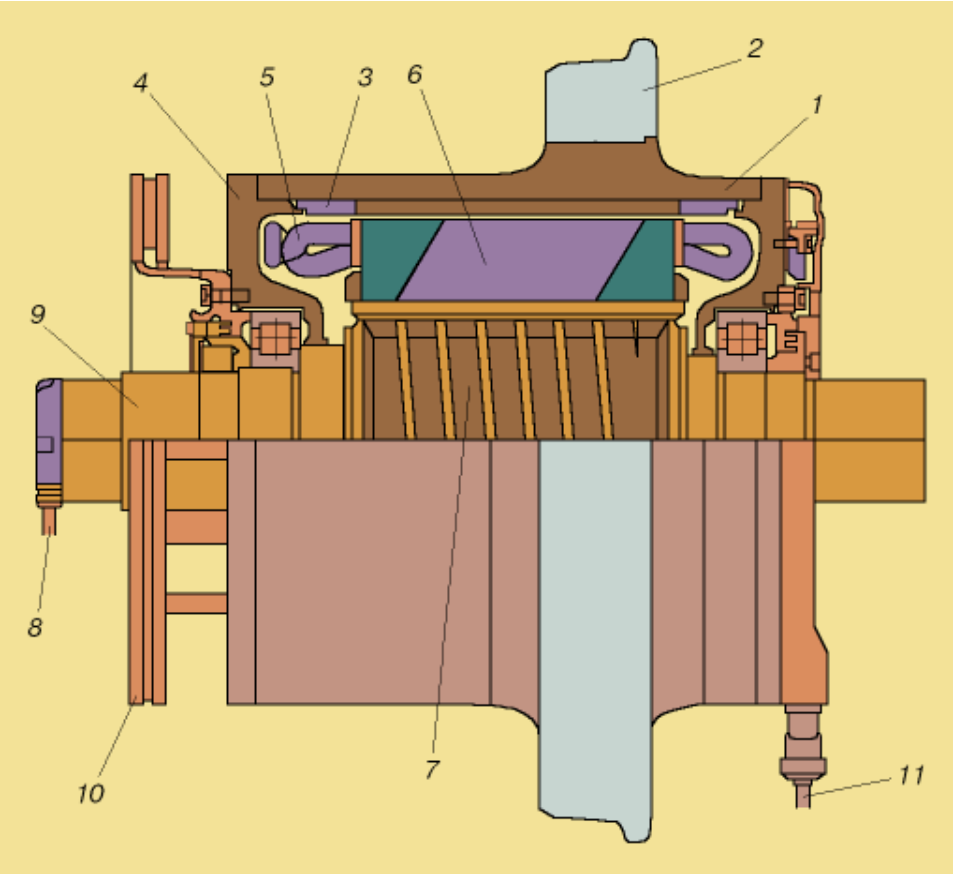

1 - outer rotor housing pipe; 2 - wheel band; 3 - short-circuited rotor winding rods; 4 - rotating bearing shield; 5 - front part of the stator winding; 6 - stator iron package; 7 - cooling jacket pipe; 8 - power supply plug connector; 9 - hollow axle; 10 - brake disc; 11 - coolant supply

Figure 2.8.20 - Longitudinal section of the hub drive

Table 2.8.2 - Technical data of the hub traction drive

Outer diameter of the housing pipe, mm	440
Motor length, mm	460
Number of poles	8
Schematic of inclusion of stator windings	star
Coolant flow rate (water with glycol), l/min	15
Nominal motor power, kW	35
Nominal mode rotation frequency, rpm	240
Motor voltage, V	380
Nominal motor current, A	100

The total mass of each motor-wheel drive unit is 510 kg (without the bandage). The active elements of the motor (magnetic conductor, windings, electrical connectors, etc.) have a mass of only 208 kg. The rest is accounted for by passive elements, which are mostly used on non-motor wheels as well.

Main characteristics

The hub traction drive is specially designed for rolling stock used on lines with a nominal voltage in the contact network of 600 V or 750 V DC (Fig. 2.8.21). The minimum permissible voltage is 420 V, the maximum is 900 V. In this case, the magnetic flux in the motor is set independently of voltage fluctuations in the contact network (to the extent that the voltage regulation system of the converter allows it).

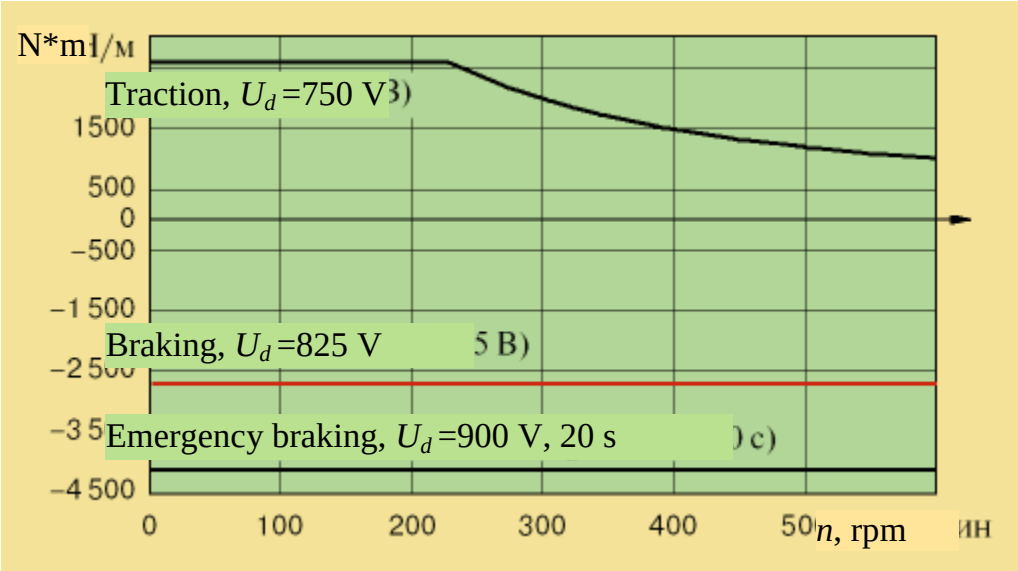

M - torque; *n* - speed; U_d - voltage in the contact network

Figure 2.8.21 - Motor characteristics at a mains voltage of 750 V

Fig. 2.8.21 shows the curves of the dependence of the engine torque on the speed for the traction, service and emergency braking modes.

2.8.9. Synchronous traction motor with excitation from permanent magnets

Traction motors, which are excited by permanent magnets, which have a large number of pole pairs, allow the implementation of a gearless electric traction drive. In this case, a significant increase in efficiency and a reduction in weight are achieved compared to a gear drive, Fig. 2.8.22.



Figure 2.8.22 - Tesla IPM-SynRM synchronous traction motor

New magnetic materials and IGBT transistors have allowed us to begin work on creating a powerful traction motor excited by permanent magnets.

Theoretical and practical studies have shown significant advantages of such a traction drive compared to the widely used three-phase asynchronous:

– a permanent magnet motor can have a much larger number of pole pairs than a three-phase asynchronous one. This provides such a high torque that it becomes possible to use such a motor without a gearbox, that is, a gearless traction drive is implemented;

– since the motor already has a magnetic excitation field and there is no gearbox, the traction drive has increased efficiency. In turn, IGBT transistors provide a further increase in the overall efficiency of the entire traction drive system;

– a permanent magnet motor, which provides increased power and torque, has less mass and volume than an asynchronous motor with a gearbox;

– a motor with a rotor excited by permanent magnets can transfer braking energy to braking resistors without a converter.

The advantages considered provide the following:

– low mass and high efficiency allow saving energy spent on traction and improving the energy and eco-balance of traction rolling stock;

– low unsprung mass reduces the load on the track superstructure;

– a distributed traction drive allows implementing a simpler concept of electric transport. This reduces the mass of the traction drive and at the same time increases its installed power. This allows creating rolling stock with a lowered floor level, in which the axle loads can be distributed more evenly;

– all the disadvantages associated with a gear traction drive are eliminated, namely the use of additional space, wear, oil loss that pollutes the environment, and fire hazard. The latter circumstance is of particular importance if the cooling of the permanent magnet motor is implemented without the use of oil;

– a simple implementation of an electric brake system with a set deceleration is possible, since the motor in generator mode reliably switches to braking resistors.

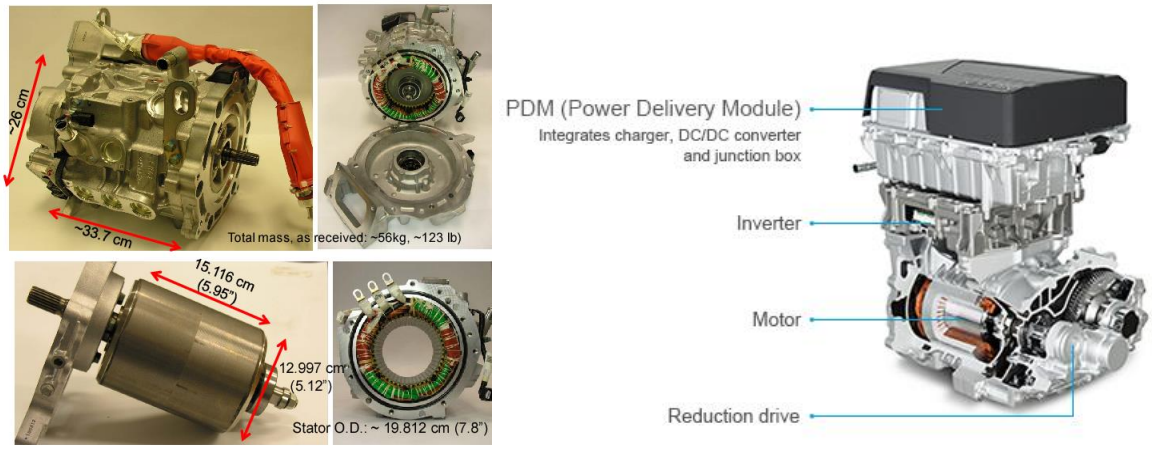

Figure 2.8.23 - Nissan Leaf synchronous traction electric motor

Permanent magnet machines can also differ in the type of rotor:

– in a machine with an active rotor, all magnets are located on the rotor, and the windings are on the stator;

– in a machine with a passive rotor, all magnets and windings are located on the stator.

This synchronous traction motor is designed as two symmetrical sections with a capacity of 250 kW each with an empty rotor. These sections are joined on the wheel axle (Fig. 2.8.24). The motor is a machine with an external rotor, in which excitation is carried out by powerful permanent magnets, and the windings are cooled by oil.

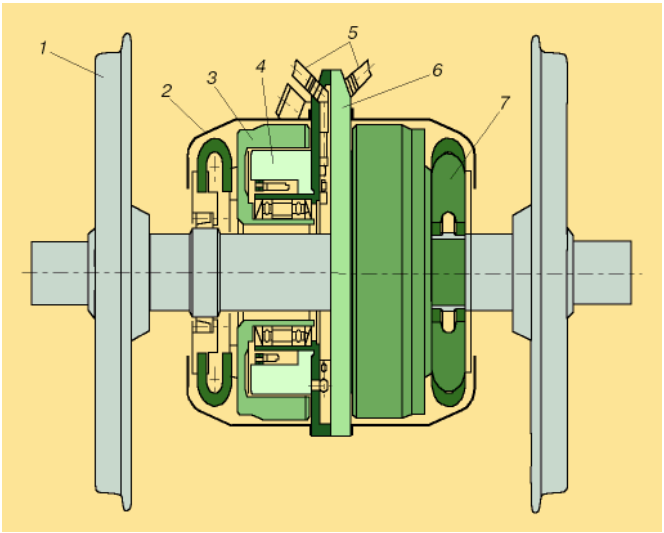

1 - wheelset; 2 - motor casing; 3 - rotor with permanent magnets; 4 - stator with windings; 5 - elements for fastening the motor to the trolley frame; 6 - carrier disk; 7 - coupling

Figure 2.8.24 - Synchronous motor with excitation from permanent magnets,which is installed on the wheelset

The outer rotors of the sections are designed to provide optimum torque, the stators are located inside. Each rotor has a housing made of glass-fiber-reinforced plastic, in the niches of which the magnets are fixed with glue in such a way as to form a ring magnetic flux. A total of 56 high-energy magnets made of NdFeB alloy (magnets made of neodymium, iron and boron) are placed around the circumference of the rotor, Fig. 2.8.25. Additionally, the magnets are fixed with bandages made of composites containing carbon fiber. Due to this, eddy currents are not formed in the area of the bandages.



Figure 2.8.25 - Neodymium-iron-boron (NdFeB) magnets

Features of motors with excitation from permanent magnets

Compared to three-phase asynchronous traction motors, machines excited by permanent magnets have a number of fundamental features.

The rotating field of the stator in such a machine must be precisely synchronized with the frequency of rotation of the rotor and depends on its position. In this regard, a system with high accuracy of determining the position of the rotor and a separate converter are required for each machine.

In a machine with permanent magnets, the excitation field cannot be turned off, so magnetic contaminants, such as metal dust from brake pads, can always get inside it. In this regard, one of the mandatory conditions for the use of such machines is their hermetic design.

As a result of aging of the material, the field of permanent magnets can weaken, as a result of which the torque developed by the motor decreases. In this regard, a magnetic material should be chosen that remains stable throughout the service life of the machine.

Since a large number of pole pairs causes a fairly high fundamental frequency of the coil current, the curve of which is also rectangular, a large number of harmonics of a wide range of frequencies arise. Interacting with the natural frequencies of the machine elements, these harmonics can cause significant noise. In addition, the electromagnetic effects caused by them should not exceed the tolerances established on railways.

A machine with an active rotor, i.e. carrying permanent magnets, has its own additional features, Fig. 2.8.26. On the one hand, such a motor is able to switch to the mode of electric rheostat braking when the traction converter is disconnected, which allows it to be classified as an electric machine that provides reliable braking. On the other hand, the proportionality of the rotation frequency of the rotor permanent magnets to the induced electromagnetic force means that when the intermediate link voltage level is reduced to a certain value, the specified rotation frequency values, and accordingly the speed of the trains, cannot be achieved. In this regard, the intermediate link voltage mode must be reliably controlled, and in the process of regulating the engine, field weakening options should be used as often as possible.

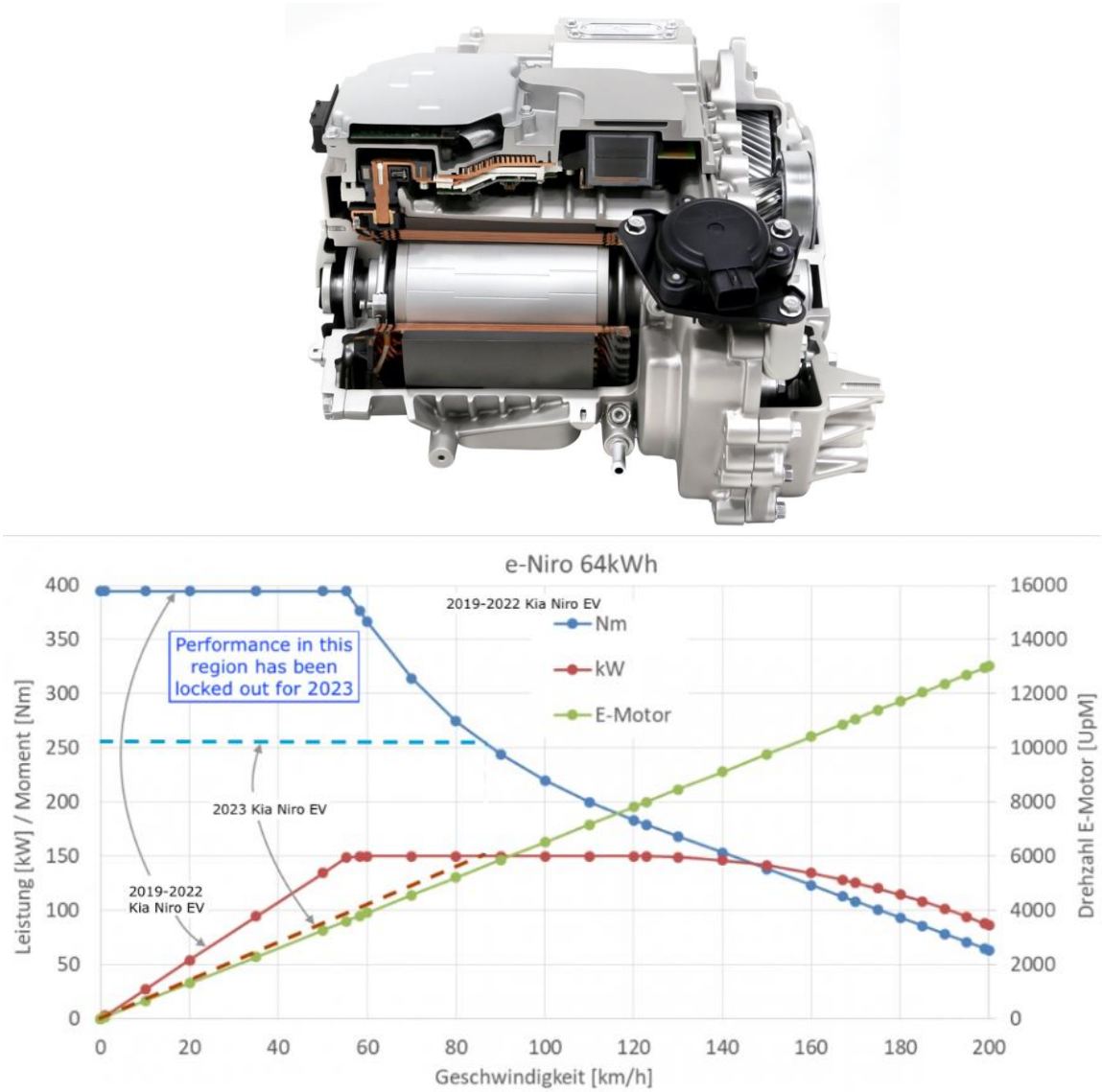

Figure 2.8.26 - Electric drive and its characteristics of the Hyundai Kona and Kia e-Niro electric vehicles

When the traction converter is switched off, the active rotor excites eddy currents in the stator iron, the magnitude of which depends on the speed of the engine operating in idle mode, i.e. when the train is coasting. The resulting heat losses must be removed by the cooling system to avoid thermal damage to the engine.

In the event of a short circuit in the stator windings, thermal damage is also possible, because even when the traction converter is switched off, the short-circuited winding continues to be supplied with current as a result of the rotation of the rotor magnets. Thus, for a machine with an active rotor, reliable removal of heat losses in the short-circuit mode is necessary.

2.8.10. Brushless DC Motor

In order to improve the properties of DC motors, motors with a contactless commutator were created, which are called contactless DC motors (CDMS), Fig. 2.8.27. The difference between CDMS and collector motors of traditional design is that in them the brush-collector assembly is replaced by a semiconductor commutator (inverter), controlled by signals coming from a contactless rotor position sensor. The working winding of the motor - the armature winding - is located on the stator core, and the permanent magnet - on the rotor.

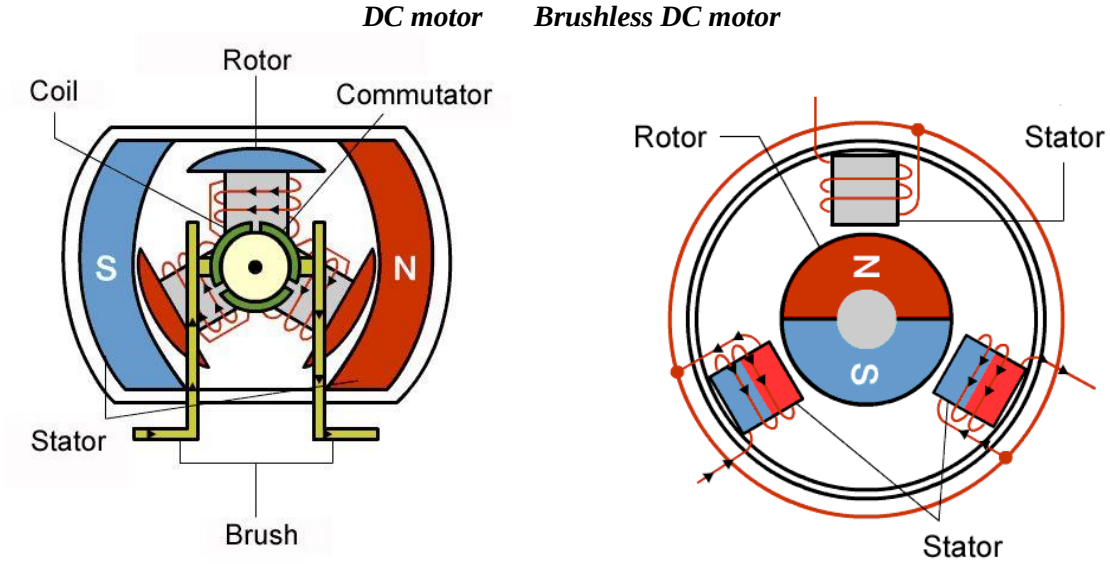

Figure 2.8.27 - Circuit diagrams of DC electric motors

The motor shaft M (Fig. 2.8.28, a) is mechanically connected to the rotor position sensor RPS, the signal from which is fed to the switch SB.

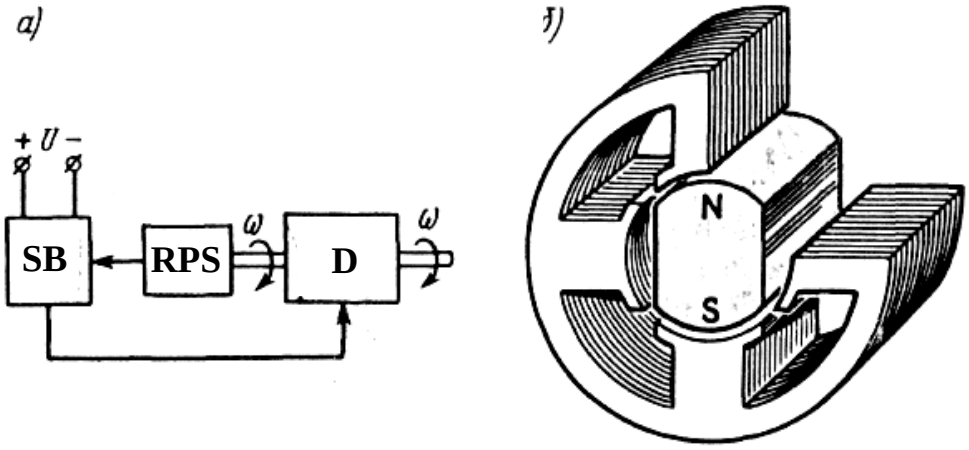

a *b*

Figure 2.8.28 - Block diagram (a) and magnetic system (b) of a four-phase brushless DC motor

The connection of the armature winding sections to the DC source occurs through the elements of the switch block SB. The purpose of the RPS is to issue a control signal to the switch block in accordance with the position of the permanent magnet poles relative to the armature winding sections.

As rotor position sensors, various sensitive non-contact elements with minimal dimensions and power consumption and a high multiplicity of minimum and maximum signals are used so as not to cause disturbances in the operation of the switch unit. Sensitive elements of the RPS must work reliably under external influences (temperature, humidity, vibrations, etc.) for which the engine is designed. Such features are inherent in a number of sensitive elements (sensors): inductive, transformer, magneto-diode, etc. It is most advisable to use Hall EMF sensors (Fig. 2.8.29), which are a thin semiconductor plate with contact pads applied to it, to which pins 1-2 are soldered, which are connected to the voltage source U_1 and pins 3-4, from which the output signal U_2 is taken. If a current I flows in the circuit 1-2, and the sensor is in a magnetic field, the induction vector B of which is perpendicular to the plane of the sensor plate, then an EMF is induced in the sensor and a voltage U_2 appears at the terminals 3-4. The value of the EMF depends on the current I and the magnetic induction B, and the polarity depends on the direction of the current I in the circuit 1-2 and the direction of the magnetic induction vector B.

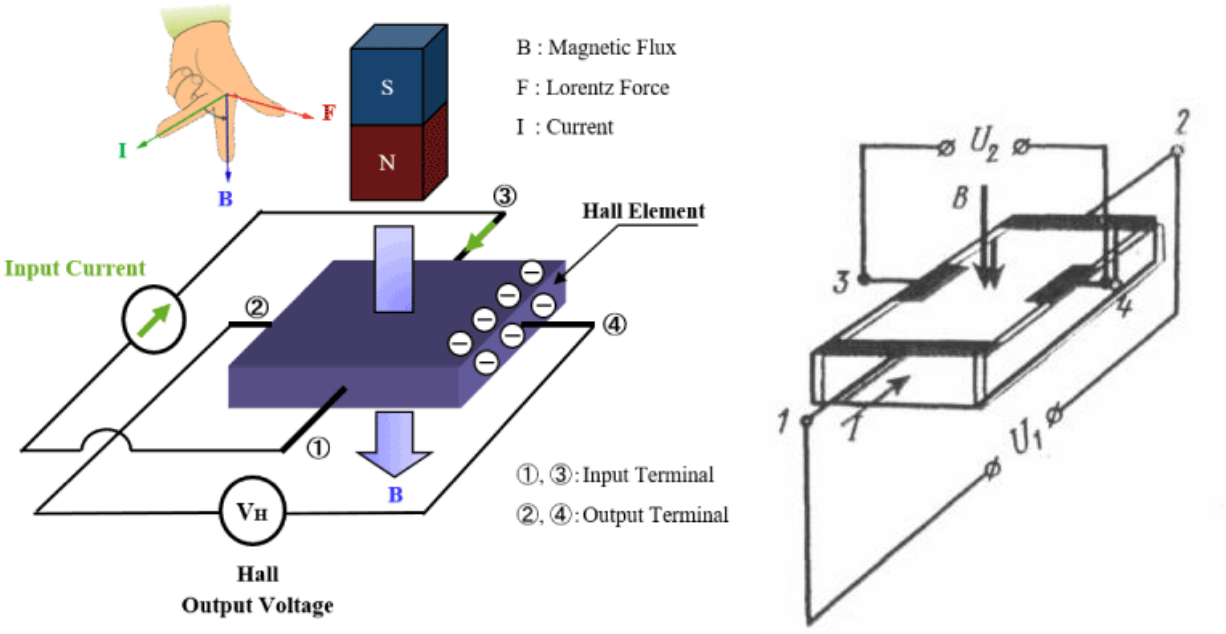

Figure 2.8.29 - Hall EMF sensor

The Hall effect is the occurrence of an electric field in a conductor or semiconductor with a current when it is placed in a magnetic field.

The Hall effect is a consequence of the influence of the Lorentz force on the movement of current carriers. In a magnetic field, when a current flows through a conductor with a density, an electric field with a strength of

$$\vec{E} = R\left[\vec{B}, \vec{j}\right], \qquad (2.8.26)$$

where R is the Hall constant.

2.9 Frame and body

The body is the main structure of a vehicle, with the essential role of protecting passengers, ensuring the integrity of the vehicle and influencing its safety, comfort and performance. As the component that defines the exterior shape of the car, the body must meet multiple requirements, from structural strength to aerodynamics and aesthetics. One of the most important roles of the body is to protect passengers in the event of an accident. It is designed to absorb and dissipate impact energy through controlled crumple zones, thereby reducing the forces transmitted to the passenger compartment. In critical areas, such as the central pillar and roof structure, high-strength materials are used, designed to provide rigidity and prevent collapse in the event of a rollover. In addition to passive protection, the body also plays an important role in the integration of active safety systems. For example, its structure must allow for the efficient fitting of airbags and seat belts, and the optimal arrangement of body elements can reduce the risk of accidents by improving driver visibility. Passenger comfort is directly influenced by the structure of the body and the materials used. A rigid body helps to reduce vibrations and noises felt in the cabin, providing a more pleasant driving experience. Also, the use of sound-absorbing materials and soundproofing technologies helps to reduce external sounds and noise produced by the engine or wind. The interior space is also determined by the body design. Modern vehicles are designed to maximize the volume available for passengers and luggage without compromising safety or performance. The shape and structure of the body significantly influence the aerodynamics of the vehicle, which has a direct impact on fuel consumption and driving stability. An aerodynamically optimised design reduces drag, leading to lower fuel consumption and improved performance, especially at high speeds. In addition to aerodynamic efficiency, the use of lightweight materials such as aluminium or carbon fibres contributes to reducing the overall weight of the vehicle, improving acceleration, handling and energy efficiency. This is especially crucial in the case of electric vehicles, where weight directly influences battery range.

The materials used in body construction play a key role in determining the vehicle's performance, safety, and efficiency. Some of the most commonly used materials include steel, aluminum, composites, and ultra-strong steel, each of which has its own advantages and disadvantages. Steel remains the predominant material in body construction due to its combination of strength, durability and low costs. It provides good protection in the event of an impact, being able to absorb the energy of the collision and maintain the structural integrity of the vehicle. However, its main disadvantage is its heavy weight, which negatively influences the fuel consumption and dynamic performance of the vehicle. Aluminum is increasingly used in the automotive industry due to the advantages it offers in terms of reducing the weight of the vehicle. A lighter car benefits from better acceleration, increased fuel efficiency and lower emissions. In addition, aluminum is resistant to corrosion, which contributes to the durability of the vehicle. However, the production costs of aluminum body are higher compared to steel, and the repair process is more complicated due to the difficulty of welding and shaping this material. Composite materials, such as carbon fibres and fibre-reinforced plastics, are mainly used in performance and luxury cars. Carbon fibres offer an excellent combination of strength and low weight, allowing for extremely light and rigid bodies. This improves the vehicle's handling and acceleration while maintaining a high level of safety. The major disadvantage of these materials is the high cost of production and the difficulty of recycling, which limits their large-scale use. Ultra-strong steel is used strategically in certain areas of the body to enhance passenger protection. It is particularly found in safety areas such as the center pillar, door frame, and roof structure, where it provides superior impact resistance without adding significant weight to the vehicle. By using ultra-strong steel, automakers can optimize the body to meet stringent safety standards while maintaining reduced weight and improved energy efficiency.

The body of a vehicle can be built in two main ways: monocoque body Figure 2.9.78 (unibody) and body-on-frame, each having advantages and disadvantages depending on the desired application. The monocoque body is the most used in the modern automotive industry, being characterized by the integration of the resistance structure into a single assembly. It offers lower weight, higher torsional rigidity and increased efficiency in terms of safety and aerodynamics. The main advantage of the monocoque body is that it distributes impact forces throughout the structure, improving passenger protection and reducing fuel consumption due to its low weight. On the other hand, repairing a vehicle with a monocoque body can be more expensive, as structural deformation following an accident requires complex repairs or even the replacement of large body segments.



Figure 2.9.78 Monocoque body

In contrast, the body on the frame Figure 2.9.79, mainly used in off-road vehicles, trucks and large SUVs, consists of a separate chassis on which the vehicle's components, including the engine, suspension and passenger compartment, are mounted. This type of construction offers superior resistance to intense stress, making the vehicle more durable and more suitable for rough terrain or for transporting heavy loads. It also allows for easier modifications and repairs, as components can be replaced independently of the main structure. However, the body on the frame is heavier than the monocoque one, which leads to higher fuel consumption and less maneuverability on paved roads.



Figure 2.9.79 Frame Structure

The evolution of body design has been marked by the shift from simple structures, based on rigid chassis and straight metal panels, to complex aerodynamic shapes and advanced materials integrated into modern manufacturing processes. Technological progress has made it possible to optimise the body both in terms of energy efficiency, by reducing weight and improving aerodynamics, and safety, by using controlled deformation structures and materials with increased strength. Today, automakers use computer simulations and advanced manufacturing processes, such as laser welding and structural bonding, to build more efficient, lighter, and safer bodies. In the future, the integration of sensors and smart technologies into the body will play a crucial role in the development of autonomous and connected vehicles, further reinforcing the importance of body design in the automotive industry. The body plays an essential role in the safety of the vehicle, having a major impact on the protection of passengers in the event of an accident. One of its most important functions is passive safety, which involves the efficient distribution of impact forces through controlled crumple zones. These areas are designed to absorb the energy generated by the collision, thus reducing the forces transmitted to the cabin and minimizing the risk of injury to the occupants. By using structures specifically designed to progressively deform, both passengers inside the vehicle and other road users, such as pedestrians, are protected.

The integrity of the body structure is essential to provide protection in the event of different types of impacts, such as frontal, side, or pedestrian collisions. In the event of a frontal collision, the front of the body must absorb the impact without allowing excessive penetration of the engine components into the passenger compartment. For side collisions, the center pillar and side panels are reinforced with high-strength materials to prevent excessive deformation of the occupants' area. Also, in the event of a pedestrian impact, many modern vehicles are designed with hoods and bumpers that minimize the risk of injury by using deformable structures and automatic hood lift technologies to reduce the impact on the pedestrian's head.

Another key aspect of passive safety is the use of energy-absorbing materials in various areas of the body. For example, critical areas of the vehicle structure, such as pillar A, B and C Figure 2.9.80, are made

of ultra-resistant steels, which maintain the rigidity of the passenger compartment and protect passengers in the event of an accident. At the same time, exterior components such as bumpers and bonnet are made of materials that can warp in a controlled manner, helping to dissipate impact energy. In addition, the use of composite materials and multi-layer structures improves protection without compromising the weight and efficiency of the vehicle. [1]

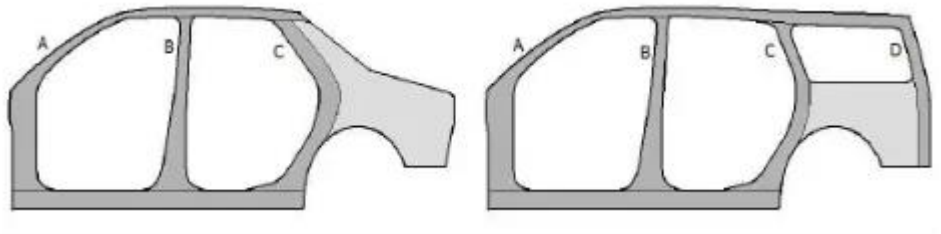

Figure 2.9.80 Lateral strength structure of the body

The manufacture of a vehicle body involves a number of advanced technologies that ensure both structural integrity and safety, durability and production efficiency. Among the most important processes used in body assembly are welding, structural bonding and the use of adhesives, each of which plays an essential role in strengthening the vehicle assembly. Welding is one of the oldest and most widely used techniques in the manufacture of car bodies, being essential for joining metal components. Among the most used methods are spot welding, MIG (Metal Inert Gas) welding and laser welding. Spot welding is preferred in the automotive industry due to its efficiency and speed, allowing precise joining of metal panels by applying electric current and pressure to the contact points. This method ensures strong joints without compromising the body structure. Laser welding has become increasingly popular in modern body manufacturing due to its ability to achieve precise and extremely strong joints with low material and energy consumption. This technology is used in particular on components that require increased rigidity, such as the centre pillar and crossbars, helping to increase vehicle safety. Another advantage of laser welding is the possibility of joining different materials, such as steel and aluminum, without compromising the strength of the assembly. In recent years, structural bonding has become an essential method in body construction, being used to join body panels and other components without compromising the integrity of the material. This involves the use of high-performance industrial adhesives, capable of providing extremely strong and elastic joints, contributing to vibration absorption and increasing the durability of the body. One of the main advantages of structural bonding is that it allows the weight of the vehicle to be reduced, as it eliminates the need for additional fasteners, such as screws or rivets. In addition, bonding evenly distributes stresses in the body structure, which improves its performance on impact and reduces the risk of component cracking. This method is frequently used in joining different materials such as aluminum and carbon fibers, thus facilitating the use of lightweight materials in modern vehicle design. Adhesives play a crucial role in modern manufacturing processes, being used not only for bonding body components, but also for improving sound insulation and corrosion protection. They are strategically applied in areas exposed to high stresses or vibrations, thus contributing to increasing the durability of the vehicle. In addition, the use of adhesives allows for the creation of more flexible joints, which helps to reduce the effects of material fatigue and prevent cracking caused by repeated mechanical stress. This technology is particularly important in electric car manufacturing, where reducing weight and improving energy efficiency are top priorities.

The aerodynamic design of the body plays a role in the performance of a vehicle, influencing both fuel consumption and stability at high speeds, acoustic comfort and road safety. The shape of the body determines how air circulates around the vehicle, and optimised aerodynamics reduce drag, leading to improved energy efficiency. By reducing the coefficient of aerodynamic drag (Cx), vehicles can reach higher speeds with lower energy consumption, whether it is fossil fuels or electricity.

A well-optimised aerodynamic design includes elements such as flowing body lines, calculated windshield and roof pitch angles to minimise turbulence, the use of diffusers and spoilers to control airflow and reduce the coefficient of friction. The lower fairings also help direct air under the vehicle, reducing energy losses caused by turbulence underneath the car. These solutions allow significant fuel savings, reducing consumption by up to 10-15% at highway speeds, which implicitly also contributes to the decrease of greenhouse gas emissions.

In the case of electric vehicles, the aerodynamic design has an even greater impact on the range, as any loss of efficiency means additional energy consumption from the battery. Unlike conventional vehicles,

electric cars do not need large air intakes to cool the engine, which allows for the use of more compact and aerodynamically efficient shapes. For example, manufacturers adopt closed front grilles, retractable door handles, and virtual side mirrors (replaced by video cameras) to reduce drag.

Electric vehicle body designs are often designed to provide minimal wind resistance, using elements such as gently curved roofs, smooth panels, and integrated air deflectors. The Tesla Model S, Mercedes EQS or Lucid Air are examples of cars that have achieved drag coefficients of around 0.20-0.23, which contributes to a significant increase in range. In addition, aerodynamics also influence the cooling of batteries and electronic systems, allowing for more efficient thermal management and extending component life. With the transition to electric and autonomous vehicles, the design and functionality of the car body is constantly evolving, adapting to new technological and safety requirements. Future bodies will no longer only have the classic role of protecting passengers and optimizing aerodynamics, but will become intelligent platforms, integrated with advanced assistance systems and interconnected with road infrastructure. Autonomous and electric vehicles require bodies capable of housing the many sensors, cameras, and radar systems necessary for autonomous navigation and safety. These components must be integrated into the body structure in a way that does not compromise the aesthetics, aerodynamics or durability of the vehicle. For example, the design of future cars includes smooth, specially contoured surfaces to minimize sensory interference, with LiDAR sensors discreetly mounted in the roof or bumper. Also, in the context of electric vehicles, the body must ensure the protection of the batteries integrated into the chassis, contributing to structural rigidity and passenger safety in the event of an impact. Lightweight materials such as aluminium and carbon fibres are increasingly being used to reduce vehicle weight and improve energy efficiency, thus offsetting the extra weight of batteries. Another emerging trend is the adoption of the modular body, which allows automakers to create flexible platforms on which various vehicle models can be built, from sedans and SUVs to commercial vehicles. This approach reduces production costs, shortens the development time of new models and facilitates rapid adaptation to market requirements.

An example is the use of skateboard platforms, in which the battery, electric motors and chassis essentials are integrated into a unitary base, on which different types of bodies can be mounted. This solution offers increased versatility, allowing the production of customizable vehicles, adapted to the specific needs of users. The modular body can also help extend a vehicle's lifespan by making it possible to replace specific sections as needed.

[1]“Constructie Caroserie Autoturism | PDF.” Accessed: Feb. 14, 2025. [Online]. Available: https://www.scribd.com/document/380859663/Constructie-caroserie-autoturism

Chapter 3 Theory of the car

Performance properties

Automobile transport holds an important place among other types of transportation for carrying goods. Solving problems related to road transport is impossible without knowledge of automobile theory. Automobile theory studies its performance properties, which ensure the transportation of goods and passengers with maximum productivity, safety, and comfort, while requiring minimal labor and material costs.

Theoretical analysis of performance properties helps to determine the limits of capability of wheeled vehicles (WV) and to realize, under operating conditions, the advantages inherent in a given automobile design.

The theory of the automobile is a science about its performance properties, which characterize the possibility of effective use of the automobile under certain conditions and allow evaluating to what extent the design meets these conditions. The practical implementation of theoretical achievements makes it possible to increase the productivity of the automobile and reduce transportation costs. For this, it is necessary to increase the average speed of the WV and reduce fuel consumption while simultaneously maintaining road safety and providing comfort for the driver and passengers.

In automobile theory, performance properties directly related to vehicle motion are considered.

These include:

-traction–speed properties;
-braking properties;
-fuel economy;
-handling;
-stability;
-maneuverability;
-ride comfort;
-cross–country ability;
-environmental friendliness.

3.1 Main parameters of a vehicle

The primary purpose of an automobile is to transport the required payload over a necessary distance with an acceptable fuel consumption.

3.1.1 External speed characteristic of the ICE

The automobile moves as a result of the action of driving forces and resistance forces. The main driving force is the traction force at the driving wheels, which arises from the operation of the engine and the interaction of the driving wheels with the road. The resistance forces include: transmission friction, road resistance, and air resistance.

In most automobiles, the source of energy is the internal combustion engine (ICE). Its power characteristics are commonly evaluated by speed characteristics, which are used to determine the traction force.

The speed characteristic is the dependence of power, torque, and fuel consumption on the crankshaft rotation speed (Fig. 3.1) at full or partial throttle opening (external and partial characteristics).

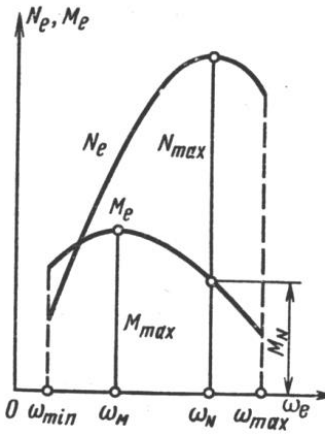

Figure 3.1. External speed characteristic of an engine without a speed limiter.

For constructing the ESC, data from factory bench tests or empirical formulas are used, which allow building graphs based on known values of N_{emax} and ω_N. The Leiderman formula has gained the widest application.

$$N_e = N_{\max} \cdot \left[a \cdot \left(\frac{\omega_e}{\omega_N} \right) + b \cdot \left(\frac{\omega_e}{\omega_N} \right)^2 - c \cdot \left(\frac{\omega_e}{\omega_N} \right)^3 \right],$$

where a, b, c – empirical coefficients (for gasoline and gas engines;
a = b = c = 1 for four-stroke diesel engines: a = 0.53, b = 1.56, c = 1.09);
ω_e – angular velocity of the crankshaft, rad/s (s^{-1})

$$\omega_e = \frac{\pi \cdot n_e}{30}.$$

The corresponding value of the effective torque is (N·m),

$$M_e = \frac{N_e}{\omega_e},$$

where N_e – power, W.

3.1.2. Transmission Efficiency (η)

Not all the energy received from the engine is directly used for vehicle motion. During the operation of transmission mechanisms, additional energy is spent on friction (slippage of clutch discs, friction of gear teeth, as well as friction in bearings and drive shafts) and on oil agitation (in the gearboxes and drive axle housings). In this process, mechanical energy is converted into heat and dissipated.

Energy loss increases when an additional pair of gears is engaged, drive joints operate at a large angle, oil thickens, or the differential works during a turn. The greater this loss, the lower the transmission efficiency η_tr, which represents the ratio of power or torque transmitted to the driving wheels to the power or torque of the engine.

In calculations, the transmission efficiency can be approximately taken as:

-Passenger cars: 0.91–0.97
-Trucks: 0.85–0.89
-Sports cars: 0.92–0.98

3.1.3. Wheel Radii of a Vehicle

Since vehicle wheels are fitted with elastic tires, the wheel radius changes during motion.
The following vehicle wheel radii are distinguished:

- Free wheel radius r_B – the distance from the road surface to the wheel axis without load R_z.
- Static wheel radius r_s – the distance from the road surface to the axis of a stationary wheel under vertical load Rz. The value of r_s is provided in the technical specifications of tires.
- Dynamic wheel radius r_d – the distance from the road surface to the axis of a moving wheel. The dynamic radius increases as the load R_z decreases and as the tire air pressure increases. With increasing vehicle speed, r_d increases under centrifugal forces.
- Rolling radius wheel r_k – the radius of a conditionally undeformed wheel rolling without slipping, having the same angular and linear velocities as the given elastic wheel.

It is determined by the formula:

$$r_к = \frac{S}{2 \cdot \pi \cdot n_к}$$

where n_k – number of wheel revolutions over the distance S.

In the case of full slip, S = 0 and $r_k = 0$.
During sliding, $n_k = 0$, and $r_k \rightarrow \infty$.
On roads with dry hard surfaces, slipping of the driving wheels and radius changes are small. Therefore, usually the numerical values of the radii r_s, r_d, and r_k are considered equal and denoted by the letter r.

3.1.4. Forces acting on the driving wheels of the vehicle

The resultant of all forces acting from the road on the wheel in the contact area is called the road reaction. It is represented by three components (Fig. 3.2): normal R_z, tangential R_x, and lateral R_y.

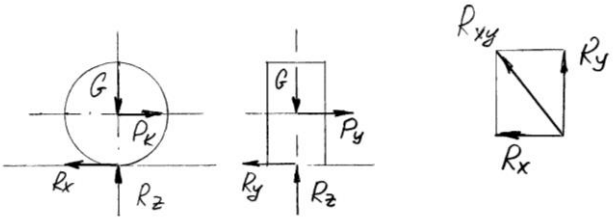

Figure 3.2. Forces acting on the wheel

The appearance of the reactions R_x and R_y is possible only in the presence of the reaction R_z.
The tractive force is the ratio of the torque on the half-axles to the radius of the driving wheels during uniform motion of the vehicle:

$$P_к = \frac{M_к}{r_к}$$

The tractive force P_k is transmitted through the tangential reaction R_x. When turning, moving on a slope, or under the action of a lateral wind, the wheel also experiences the lateral force P_y, resulting in the lateral road reaction R_y.

3.1.5. Wheel-road adhesion

The magnitude of the tractive force P_k on the driving wheels of a vehicle, necessary for its motion, is limited by the tire-road adhesion. Tire adhesion is evaluated by the adhesion coefficient φ, which is equal to the ratio of the reaction R_x to the magnitude of the reaction R_z (Fig. 2.4):

$$\varphi = \frac{R_x}{R_z}$$

The adhesion force Rφ is the force that opposes the sliding of the wheels relative to the road. It is equal to the friction force of the tire that occurs at the contact patch with the road. The magnitude of the adhesion force P_φ depends on the normal reaction of the driving wheels on the road and the adhesion coefficient φ:

$$P_\varphi = \varphi \cdot R_{z2},$$

where φ — the adhesion coefficient of the driving wheels with the road; R_{z2} — the normal reaction of the driving wheels (driving rear wheels).

For the motion of a vehicle wheel without longitudinal and lateral slip, the following condition must be satisfied (Fig. 2.4):

$$P_\varphi = \varphi \cdot R_z \geq R_{xy} = \sqrt{R_x^2 + R_y^2}.$$

To ensure vehicle movement, the tractive force $P_к$ on the driving wheels must be less than, or at most equal to, the adhesion force of the wheels with the road. If this condition is not met, the wheels will slip.

The adhesion coefficient depends on the type and condition of the road surface, tread pattern, tire air pressure, vehicle speed, and vertical load on the wheel. For a worn tire, the adhesion coefficient φ is twice as low as that of a new tire. The value of φ significantly decreases when driving on wet or icy surfaces, especially as vehicle speed increases. On hard, dry road surfaces, an increase in tire air pressure, vertical load, and vehicle speed reduces the adhesion coefficient. Wheels often slip during sudden acceleration or when driving on slippery roads.

The values of adhesion coefficients are given in Table 3.1.

Table 3.1 – Values of adhesion coefficient

Road surface	Condition of surface	
	Dry	Wet
Concrete	0,8	0,5
Asphalt concrete	0,7	0,4
Soil	0,6	0,3
Snow	0,3	0,2
Ice	0,1	0,08

3.1.6. Moments of inertia of the vehicle and its components

During non-uniform motion of the vehicle, part of the engine torque is spent on accelerating the flywheel and the transmission components and wheels connected to it.

The moment of inertia of the flywheel with transmission components, referred to the axis of rotation of the driving wheels, can be expressed as:

$$M_{jм} = J_м \cdot \varepsilon_м \cdot u_к \cdot u_{рк} \cdot u_0 \cdot \eta_{тр}$$

where J_m – moment of inertia of the flywheel and connected transmission components, N·m·s²;

ε_m – angular acceleration of the flywheel, rad/s² (s^{-2}).

The moment of inertia of all the vehicle wheels is determined by the formula:

$$M_{jк} = \sum_{i=1}^{n} J_{кi} \cdot \varepsilon_к,$$

where n – number of wheels on the vehicle;

$J_к$ – moment of inertia of one wheel relative to its axis of rotation, N·m·s²;

$\varepsilon_к$ – angular acceleration of the wheel, rad/s².

Then the torque transmitted from the engine to the driving wheels during vehicle acceleration, taking into account the acceleration of the flywheel and wheels, is equal to:

$$M_к = \left(M_e - J_м \cdot \varepsilon_м\right) \cdot u_к \cdot u_{дк} \cdot u_0 \cdot \eta_{mp} - \sum_{i=1}^{n} J_{ki} \cdot \varepsilon_к$$

The final tractive force on the driving wheels of the vehicle during non-steady motion is equal to:

$$P_к = \frac{\left(M_e - J_м \cdot \varepsilon_м\right) \cdot u_к \cdot u_{дк} \cdot u_0 \cdot \eta_{mp} - \sum_{i=1}^{n} J_{ki} \cdot \varepsilon_к}{r}$$

3.1.7. Relationship between the speed and acceleration of a vehicle and the rotational speed of the crankshaft of the ICE

The linear speed of the wheel is equal to:

$$V_к = \omega_к \cdot r,$$

where $\omega_к$ – angular velocity of the wheel, rad/s (s^{-1});
r – radius of the wheel, m.

Considering, that

$$\omega_к = \frac{2 \cdot \pi \cdot n_к}{60} = \frac{\pi \cdot n_к}{30};$$

$$n_к = \frac{n_e}{u_к \cdot u_{дк} \cdot u_0},$$

the vehicle speed can be determined

$$V = \frac{\pi \cdot n_e \cdot r}{30 \cdot u_к \cdot u_{рк} \cdot u_0}.$$

Similarly, the acceleration of the vehicle is equal to

$$j = r \cdot \varepsilon_к = \frac{r \cdot \varepsilon_e}{u_к \cdot u_{дк} \cdot u_0},$$

where $\varepsilon_к$, ε_e – angular accelerations of the wheels and crankshaft, respectively.

3.2 General dynamics of the vehicle

3.2.1. Rolling of an elastic wheel

Automobile wheels are equipped with pneumatic tires, which provide the wheels with high elasticity in all directions: radial, tangential, and lateral. Therefore, the radius of an automobile wheel is not constant and changes under the influence of forces acting on it.

3.2.2. Rolling resistance

The occurrence of rolling resistance during motion is caused by energy losses due to internal friction in the tire, friction between the tire surface and the road, and rut formation.

Energy losses in the tire can be assessed from the graph of the dependence of the vertical P_z load on the tire versus its deflection $\Delta_ш$ (Fig. 3.3).

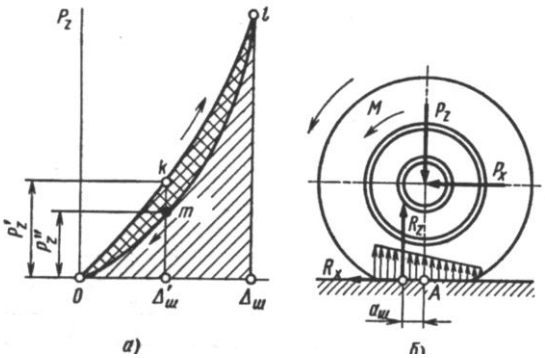

Figure 3.3. Rolling resistance.

Energy losses in the tire are called hysteresis and are caused by internal friction between the individual parts of the tire (tread, carcass, cord, etc.). Friction losses in the tire are irreversible. The rolling resistance force PfP_f reaches its maximum value when moving on a horizontal road and is equal to:

$$P_f = f \cdot G,$$

where G – vehicle weight, N;

f – rolling resistance coefficient.

When moving uphill or downhill, the rolling resistance force equals:

$$P_f = f \cdot G \cdot \cos\alpha,$$

where α – road incline angle.

In this case, the rolling resistance power will be equal to (kW).

$$N_f = \frac{V \cdot P_f}{1000} = \frac{V \cdot f \cdot G \cdot \cos\alpha}{1000},$$

where V – vehicle speed, m/s.

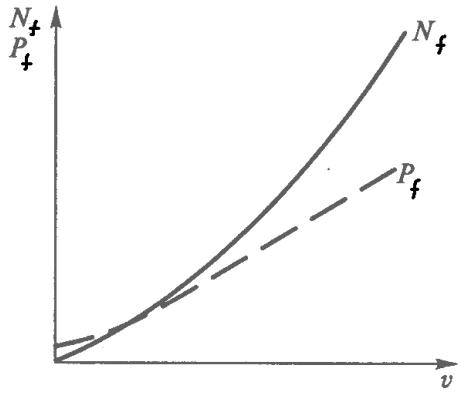

Figure 3.4. Dependence of rolling resistance force P_f and power N_f on vehicle speed V

The dependence of rolling resistance force P_f and power N_f on vehicle speed V is shown in Fig. 3.4.

3.2.3. Rolling resistance coefficient

The rolling resistance coefficient affects energy losses. It depends on many design and operational factors and is determined experimentally, ranging from 0.01…0.3.

The following factors influence the rolling resistance coefficient.

Speed

Up to 50 km/h, the rolling resistance coefficient can be considered constant. At higher speeds, it begins to increase.

Type and condition of the road surface

On roads with hard surfaces, rolling resistance is caused by tire deformations. With an increasing number of road irregularities, the rolling resistance coefficient rises. During road deformation, the coefficient is determined by the deformations of both the tire and the road.

Thus, the rolling resistance coefficient is 0.007–0.03 for asphalt concrete highways, and 0.1–0.3 for sand.

Tire types

The rolling resistance coefficient depends on the tread pattern, wear, carcass construction, and material quality of the tire.

Air pressure in the tire

On roads with hard surfaces, decreasing tire air pressure increases rolling resistance due to higher internal friction losses in the tires (Fig. 3.3).

Tire temperature

On hard roads, as tire temperature increases, the rolling resistance coefficient decreases due to reduced internal friction losses in the tires.

Wheel load

Increasing the normal load on the wheel significantly increases the rolling resistance coefficient on deformed roads and slightly on hard-surfaced roads.

Torque

When torque is transmitted through the wheel, the rolling resistance coefficient increases due to tire slippage at the contact patch. For driven wheels, the rolling resistance coefficient is 10–15% higher than for non-driven wheels (Fig. 3.3).

The rolling resistance coefficient has a significant impact on fuel consumption. Studies have shown that even a small reduction in this coefficient ensures substantial fuel savings. However, reducing the rolling resistance coefficient is a rather complex task.

3.2.4. Vehicle aerodynamics

During motion, the vehicle overcomes air resistance. This resistance is mainly caused by frontal air pressure. Fig. 3.5 shows the dependence (in relative units) of frontal drag on the shape of a simple-form body.

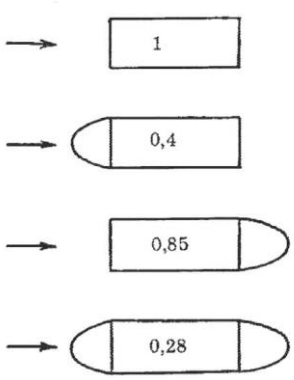

Figure 3.5. Dependence of frontal drag on body shape

From the diagram, it is seen that rounding the front part reduces air resistance by 60%, while rounding the rear part reduces it by 15%.

The air drag coefficient k, which depends on the shape and surface quality of the vehicle, is determined experimentally during wind tunnel testing.

The air drag coefficient k ($N \cdot s^2/m^2$) is:

- 0.2–0.35 for passenger cars;
- 0.35–0.4 for buses;
- 0.6–0.7 for trucks.

When trailers are present, air resistance increases because the external friction surface area grows and vortices form between the tractor and trailer. Each trailer increases the coefficient kk on average by 15–25%.

The frontal area (m²) depends on the vehicle type and can be approximately determined using the following formulas:

For trucks and buses:

$$F_a = B \cdot H_a .$$

For passenger cars:

$$F_a = 0.78 \cdot B_{a\cdot} \cdot H_a ,$$

where B – track width of the vehicle, m.

H_a – maximum height of the vehicle, m.

W_a – maximum width of the vehicle, m.

3.2.5. Driving resistance forces

Driving resistance forces are the forces that oppose the motion of the vehicle. These forces are directed opposite to the direction of motion (Fig. 3.6).

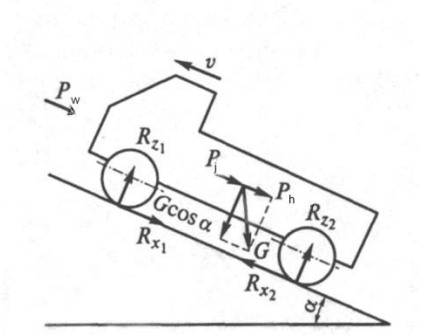

Figure 3.6. Driving resistance forces.

When moving on an incline with angle α, the vehicle is subjected to the following forces:

- rolling resistance force P_f;
- -climbing resistance force P_h;
- -air resistance force P_w;
- -acceleration resistance force P_j.

The rolling and climbing resistance forces are related to the road characteristics. The sum of these forces is called the total road resistance force P_ψ.

3.2.5.1. Air resistance force

During vehicle motion, the air resistance force P_w is caused by the displacement of air and its friction against the vehicle surface. If the vehicle moves in the absence of wind, the air resistance force, N

$$P_w = k \cdot F_a \cdot V^2 .$$

In the presence of wind

$$P_w = k \cdot F_a \cdot (V \pm V_{\text{вітр}})^2 ,$$

where k – air resistance coefficient (drag coefficient), N·s²/m²,

F_a – frontal area of the vehicle (Midel section), m²,

V – vehicle speed, m/s,

V_{wind} – wind speed, m/s (positive for headwind, negative for tailwind).

The power (kW) expended to overcome air resistance without wind and with wind is respectively:

$$N_w = \frac{P_w \cdot V}{1000} = \frac{k \cdot F_a \cdot V^3}{1000};$$

$$N_w = \frac{k_w \cdot F_a \cdot (V \pm V_{вітр})^3}{1000}.$$

The dependence of the air resistance force P_w and the power N_w required to overcome it on the vehicle speed V is shown in Fig. 3.7.

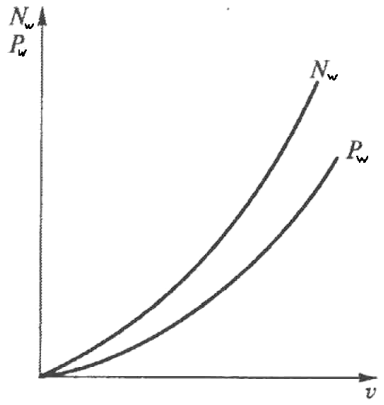

Figure 3.7. Dependence of air resistance force P_w and power N_w on vehicle speed

3.2.5.2. Climbing resistance

The weight of a vehicle moving uphill can be decomposed into two components (Fig. 3.6): parallel and perpendicular to the road surface.

The component of the weight parallel to the road surface is the climbing resistance force:

$$P_h = G_a \cdot \sin\alpha,$$

where G_a– vehicle weight, N.

As a characteristic of the slope steepness, along with the angle α\alpha, the value ii is used, called the grade, which is equal to:

$$i = \frac{H}{B} = tg\alpha,$$

where H – height of the slope;

B – length of the projection on the horizontal plane.

The grade resistance acts in the direction opposite to the slope and is a resistive force. During a descent, it is directed in the direction of motion and becomes a driving force.

The grade power (kW) required to overcome this resistance:

$$N_h = \frac{V \cdot P_h}{1000} = \frac{V \cdot G_a \cdot \sin\alpha}{1000},$$

where V – vehicle speed, m/s.

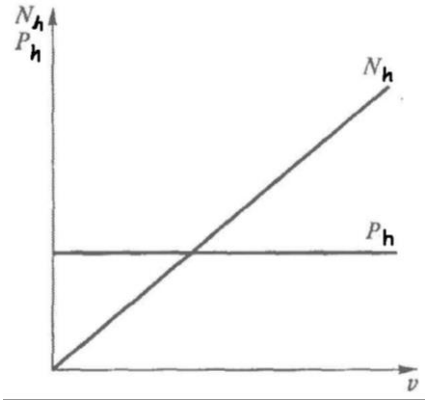

Figure 3.8. Dependence of P_h and N_h on vehicle speed

The dependence of P_h and N_h on vehicle speed is shown in Fig. 3.8.

3.2.5.3. Total road resistance force

The total road resistance force is equal to the sum of the rolling resistance and climbing resistance forces:

$$P_\psi = P_f + P_h$$

or

$$P_\psi = f \cdot G_a \cdot \cos\alpha + G_a \cdot \sin\alpha = G_a \cdot (f \cdot \cos\alpha + \sin\alpha).$$

The expression in parentheses, which characterizes the road in the general case, is called the total road resistance coefficient.

$$\psi = f \cdot \cos\alpha + \sin\alpha.$$

For small incline angles $(\alpha < 5^\circ)$ the road resistance coefficient

$\psi = f + i$.

The road resistance force in this case:

$$P_\psi = \psi \cdot G_a.$$

The corresponding power (kW):

$$N_\psi = \frac{P_\psi \cdot V}{1000} = \frac{\psi \cdot G_a \cdot V}{1000},$$

where V – vehicle speed, m/s;
G_a – vehicle weight, N.

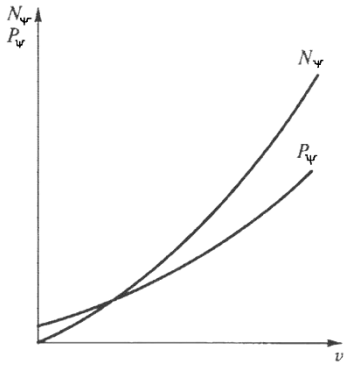

Figure 3.9. Dependence of road resistance force R_ψ and power N_ψ on vehicle speed

The road resistance force R_ψ and power N_ψ are shown in Fig. 3.9.

3.2.5.4. Acceleration resistance force

The acceleration resistance force arises due to the energy expenditure for accelerating the translational (body and cargo) and rotational (transmission and wheels) masses of the vehicle.

The acceleration resistance force, N:

$$P_j = \frac{G}{g} \cdot \delta_{об} \cdot j \,,$$

where G – vehicle weight, N;

g – acceleration due to gravity, m/s²;

δ_{rot}– coefficient accounting for rotating masses;

j – vehicle acceleration, m/s².

Power expended for acceleration, kW:

$$N_j = \frac{P_j \cdot V}{1000} = \frac{G}{g} \cdot \delta_{об} \cdot j \cdot \frac{V}{1000}$$

The dependence of the acceleration resistance force R_j and power N on the vehicle speed V is shown in Figure 3.10.

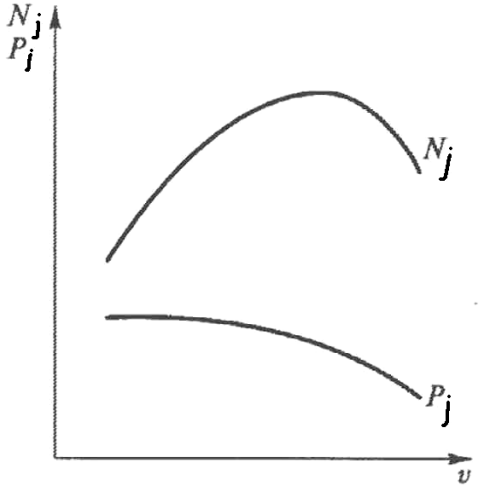

Figure 3.10. Dependence of the acceleration resistance force P_j and power N_j on the vehicle speed V

3.2.5.5. Coefficient for accounting rotating masses of the vehicle

The coefficient accounts for the additional acceleration resistance of the vehicle caused by the rotation of the engine, transmission, and wheel masses.

$$\delta_{об} = 1 + \frac{J_м \cdot U_{mp}^2 \cdot \eta_{mp} + J_{сум}}{G \cdot r_к^2} \cdot g \,,$$

where J_m– moment of inertia of the flywheel;

u_{tr},η_{tr} – gear ratio and transmission efficiency;

J_{sum}– total moment of inertia of all vehicle wheels.

The coefficient for accounting rotating masses δ_{rot} for a fully loaded vehicle can be approximately determined by the formula:

$$\delta_{об} = 1 + 0{,}05(1 + u_к^2 \cdot u_{дк}^2) \,,$$

where u_k, u_{dk} – gear ratios of the main and auxiliary gearboxes.

Tractive force of the vehicle

The engine torque M_e is transmitted to the driving wheels through the transmission.

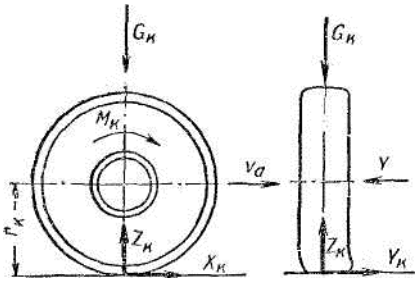

Figure 3.11. Tractive force on the wheels

The torque M_k on the driving wheels depends on the engine torque M_e, the gear ratios in the transmission, and the mechanical efficiency of the transmission:

$$M_к = M_e \cdot u_к \cdot u_{дк} \cdot u_0 \cdot \eta_{mp}.$$

The tractive force on the wheels R_k is equal to the ratio of the torque M_k on the driving wheels to the wheel radius r:

$$P_к = \frac{M_к}{r};$$

$$P_к = \frac{M_e \cdot u_к \cdot u_{дк} \cdot u_0 \cdot \eta_{mp}}{r}.$$

The tractive force R_k is the pushing force (Fig. 3.11) transmitted from the driving wheels to the supporting system (frame, body). With an increase in the tractive force on the driving wheels, the vehicle can achieve higher acceleration, overcome steeper inclines, tow trailers of greater mass, and have better traction-speed characteristics.

The tractive force is determined experimentally or by calculation using the engine's external-speed characteristic. The tractive force is limited by the adhesion force $P_ϕ$ between the driving wheels and the road.

3.2.6. Vehicle tractive characteristic

The dependence of the tractive force on the driving wheels R_k on the vehicle speed V in different gears is shown by the tractive characteristic.

The graph of the vehicle's tractive characteristic is shown in Fig. 3.12.

In the transmission of all-wheel-drive vehicles, trucks, and vehicles operating with trailers and semi-trailers, in addition to the main gearbox, additional gearboxes are also installed: splitter, demultiplicator, or transfer case.

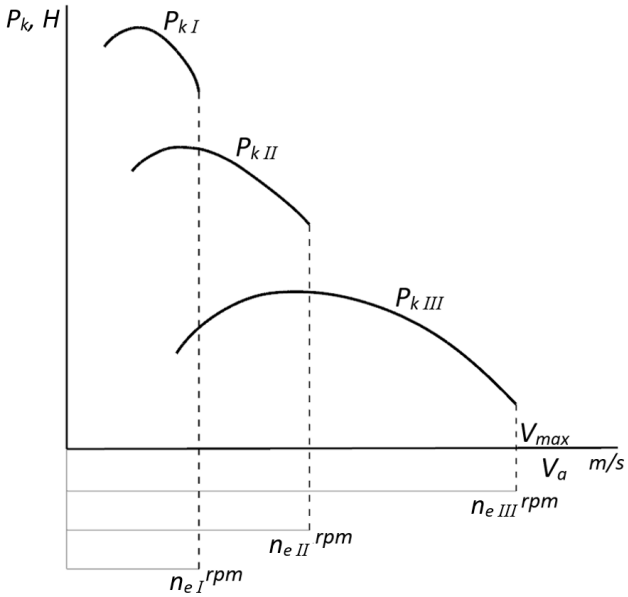

Figure 3.12. Vehicle tractive characteristic with a three-speed gearbox

They allow improving the traction-speed characteristics, increasing off-road capability, as well as fuel efficiency of the vehicle.

The splitter (multiplicator) is a step-up gearbox. It is installed before the main gearbox and doubles the number of its gears.

It usually has two gears:

– direct with a gear ratio u=1;

– step-up u<1.

The splitter does not increase the gear ratios of the gearbox or the tractive force on the driving wheels, but only reduces the gap between the gear ratios of adjacent gears and expands the range of gears and values of tractive force.

The demultiplicator is a step-down gearbox. It is installed after the main gearbox and increases its gear ratios and the number of gears by 2–3 times. It has:

– direct with a gear ratio u=1;

– step-down u > 1.

Thus, the demultiplicator increases the number of gears, gear ratios, and the tractive force on the vehicle's driving wheels, significantly expanding their range.

The transfer case is a step-down gearbox. It is installed in the transmission of all-wheel-drive vehicles and increases the gear ratios and the number of gears in the gearbox, as well as the tractive force on the driving wheels.

3.3. Traction-speed characteristics of the vehicle

3.3.1. Evaluation indicators

The traction-speed characteristics of a vehicle are the properties that determine the possible ranges of speed change or maximum accelerations of the vehicle in traction mode under various road conditions, based on the engine characteristics or the adhesion of the driving wheels to the road. Traction mode is considered the mode in which power is transmitted from the engine to the driving wheels, sufficient to overcome the vehicle's motion resistance.

Methods for evaluating the traction-speed characteristics of a vehicle can be used to:

– determine speeds, accelerations, and limiting road conditions for the possibility of movement of a specific vehicle;

– determine specific design parameters of the vehicle that can ensure the given speeds and accelerations under specified road conditions.

Operational characteristics are assessed by comparing their indicators with certain values accepted as baseline.

Some indicators are standardized by UNECE rules and regulations. The most typical and sufficient indicators for comparative evaluation are:

- maximum speed;
- conditionally maximum speed;
- acceleration time over 400 m and 1000 m;
- acceleration time to a given speed;
- acceleration–run speed characteristic;
- acceleration speed characteristic in a higher gear;
- speed characteristic on a road with variable profile;
- minimum stable speed;
- maximum incline the vehicle can overcome.

3.3.2. Vehicle motion equation

To derive the motion equation, let us consider the vehicle's acceleration on an incline (Fig. 3.13).

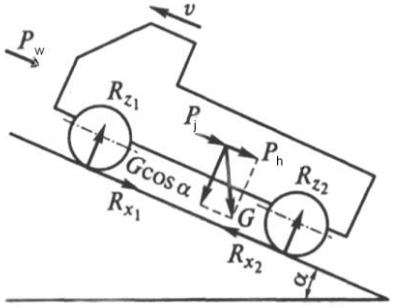

Figure 3.13. Diagram of forces acting on the vehicle

Let us project all the forces acting on the vehicle onto the road surface:

$$R_{x_2} - R_{x_1} - P_h - P_w - P_j = 0.$$

Let us substitute the tangential reactions of the road into the formula R_{x_1}, R_{x_2}:

$$R_{x_1} = \frac{J_{к_1} \cdot \varepsilon_к}{r} + R_{Z_1} \cdot f;$$

$$R_{x_2} = \frac{(M_e - J_M \cdot \varepsilon_M) \cdot u_{mp} \cdot \eta_{mp}}{r} - \frac{J_{к_2} \cdot \varepsilon_к}{r} - R_{Z2} \cdot f,$$

where J_M, ε_M are the moment of inertia of the flywheel (kg·m²) and its angular acceleration (rad/s²);

J_{K_1}, J_{K_2}, $\varepsilon_к$ are the moments of inertia of the driven and driving wheels and their angular accelerations.

According to the relationship between angular and linear accelerations:

$$\varepsilon_K = \frac{j}{r};$$

$$\varepsilon_M = \varepsilon_K \cdot u_{TP} - \frac{j \cdot u_{TP}}{r}.$$

Let us substitute the values of Rx1, Rx2 into the formula:

$$\frac{M_e \cdot u_{mp} \cdot \eta_{mp}}{r} - \frac{J_м \cdot \eta_{mp} \cdot j}{r^2} - (J_{к_1} + J_{к_2}) \cdot \frac{j}{r^2} -$$

$$-(R_{z_1} + R_{z_2}) \cdot f - \frac{G}{g} \cdot j - P_h - P_w = 0;$$

$$P_к - \frac{G}{g} \cdot (1 + \frac{J_M \cdot u_{TP}^2 \cdot \eta_{TP}}{r^2 \cdot \frac{G}{g}}) \cdot j - P_w - (P_{Z1} + P_{Z2}) \cdot f - P_h = 0;$$

where $J_K = J_{K_1} + J_{K_2}$ is the total moment of inertia of all the wheels.

After transformations, the equation, taking into account the coefficient for rotating masses, becomes:

$$\delta_{об} = 1 + \frac{J_M \cdot \eta_{TP} \cdot u_{TP}^2 + J_K}{G \cdot r^2} \cdot g$$

and the road resistance

$$(R_{Z1} + R_{Z2}) \cdot f = P_f;$$

$$P_f + P_h = P_ψ$$

we obtain the vehicle motion equation in the general form:

$$P_к - P_j - P_w - P_ψ = 0.$$

The vehicle motion equation shows the relationship between the driving forces and the resistive forces. It allows determining the vehicle's mode of motion at any moment.

For steady motion (uniform):

$$P_к - P_w - P_ψ = 0.$$

3.3.3. Differential equation of vehicle motion

The vehicle motion equation can be written in an expanded form:

$$P_к - f \cdot G \cdot cos\,\alpha - G \cdot \sin\alpha - k \cdot F \cdot V^2 - \frac{G}{g} \cdot \delta_{об} \cdot j = 0.$$

Solving the vehicle motion equation for acceleration and taking into account that

$$j = \frac{dV}{dt},$$

we obtain the differential equation of vehicle motion:

$$\frac{dV}{dt} = \frac{(P_к - f \cdot G \cdot cos\,\alpha - G \cdot \sin\alpha - k \cdot F \cdot V^2) \cdot g}{G \cdot \delta_{об}}.$$

3.3.4. Vehicle force balance

The vehicle motion equation can be represented in the following form:

$$P_к = P_ψ + P_w + P_j.$$

In this form, it is called the vehicle force balance equation, as it expresses the relationship between the tractive force on the driving wheels and the resistive forces.

Based on this equation, the force balance graph is constructed (Fig. 3.14), which allows evaluating the vehicle's traction-speed characteristics.

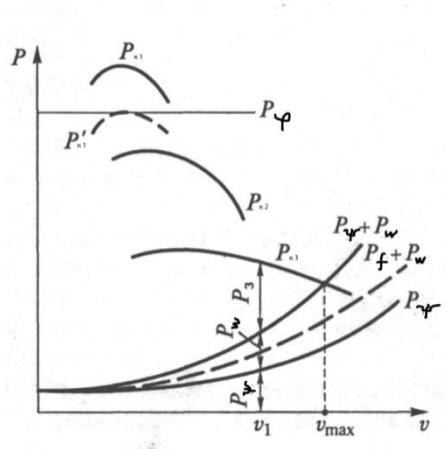

Figure 3.14. Vehicle force balance graph

When constructing the vehicle force balance graph (Fig. 4.2), the vehicle's tractive characteristic is first plotted. Then the road and air resistance forces are applied depending on speed. The resulting dependence is called the vehicle force balance graph.

The curve of total road and air resistance $P_ψ+P_w$ determines the tractive force R_k required to move the vehicle at a constant speed.

For any speed, the segment R_z characterizes the tractive force reserve. It can be used at a given speed for acceleration, overcoming additional road resistance (incline, etc.), or transporting additional load (trailer). At the same speed, the tractive reserve in a lower gear is greater than in a higher gear. This is why driving under difficult road conditions is carried out in lower gears.

The vehicle force balance graph can be used to solve various tasks related to studying the vehicle's traction-speed characteristics:

- determining the maximum speed;
- determining the maximum road resistance force;
- determining the maximum incline the vehicle can overcome;
- determining acceleration;
- determining the possibility of wheel slippage.

3.3.5. Vehicle dynamic factor

To evaluate the traction-speed characteristics of a vehicle under different loads and to compare the traction-speed characteristics of different vehicles, the dynamic factor is used. In the theory of operational characteristics of a vehicle, dynamic factors are distinguished for traction and adhesion. The traction dynamic factor is defined as the ratio of the difference between the tractive force and the air resistance to the vehicle weight:

$$D = \frac{P_к - P_w}{G_a}.$$

At the same time, the higher the traction dynamic factor D, the better the vehicle's traction-speed characteristics, the higher its off-road capability, the greater the acceleration it can achieve, the steeper inclines it can overcome, and the heavier trailers it can tow.

Maximum values of the traction dynamic factor:

-for road vehicles – 0.3…0.45;

-for off-road vehicles – 0.6…0.8.

The value of the traction dynamic factor is limited by the wheel-road adhesion. For uninterrupted vehicle motion without driving wheel slippage, the following condition must be met:

$$D_\varphi > D \geq \psi,$$

where D_ϕ is the adhesion dynamic factor.

The adhesion dynamic factor is defined as the ratio of the difference between the adhesion force and the air resistance to the vehicle weight:

$$D_\varphi = \frac{P_\varphi - P_w}{G_a}.$$

Since driving wheel slippage occurs at low speeds and high tractive force, the effect of air resistance can be neglected. Then the adhesion dynamic factor is:

$$D_\varphi = \frac{P_\varphi}{G_a} = \frac{G_2 \cdot \varphi_x}{G_a};$$

where G_2 is the weight on the driving wheels.

To establish the relationship between the dynamic factor and the driving conditions, it can be written as:

$$P_к - P_w = P_\psi + P_j;$$

$$P_к - P_w = G_a \cdot \psi + \frac{G_a}{g} \cdot \delta_{об} \cdot j.$$

If both sides are divided by G_a, we obtain the vehicle force balance equation in dimensionless form

$$D = \psi + \frac{j}{g} \cdot \delta_{об}.$$

For uniform motion j=0. Then $D = \psi$, indicating that the dynamic factor equals the coefficient of total road resistance.

3.3.6. Vehicle Dynamic Characteristic

The vehicle dynamic characteristic is defined as the dependence of the vehicle's traction dynamic factor D at full load on speed in different gears.

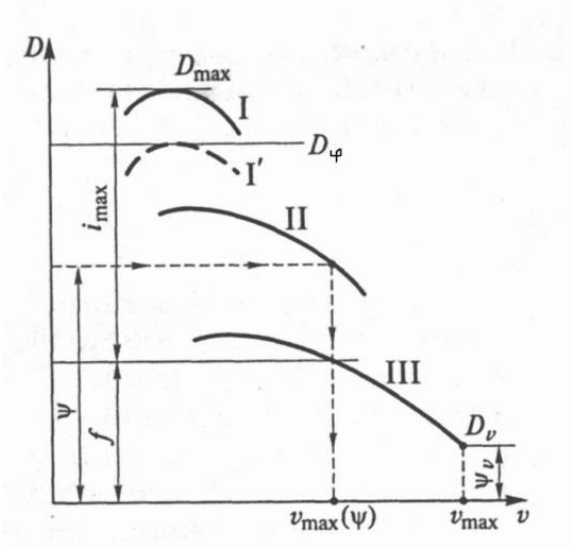

Figure 3.15. Vehicle Dynamic Characteristic

The dynamic factor in lower gears has a higher value than in higher gears (Fig. 3.15). This is due to the fact that in lower gears, the tractive force increases while the air resistance decreases.

Since in uniform motion D=ψ, each point on the dynamic factor curves determines the value of the road resistance coefficient ψ\psi that the vehicle can overcome at a given speed.

Thus, the point D_v corresponds to the value of the dynamic factor at the maximum speed V_{max} and determines the maximum vehicle speed on a road with the given total resistance coefficient ψ_v.

The ordinates of the maximum points of the dynamic factor curves represent the maximum values of the road resistance coefficient that can be overcome in each gear.

Using the dynamic characteristic, various tasks can be solved to determine the vehicle's traction-speed properties:

- determining the maximum vehicle speed for a given road resistance coefficient ψ\psi;
- determining the maximum incline the vehicle can overcome on a road with a given rolling resistance coefficient f;
- determining the maximum vehicle acceleration for a given total road resistance coefficient ψ;
- determining the possibility of driving wheel slippage.

To determine the possibility of wheel slippage, it is necessary to compare the traction and adhesion dynamic factors. When D_ϕ<D, motion in the corresponding gear without wheel slippage is impossible. For motion without driving wheel slippage in first gear (Fig. 4.3), it is necessary to reduce fuel supply, thereby reducing the traction dynamic factor. If Dϕ>D, motion will occur without driving wheel slippage.

To determine the vehicle's traction-speed characteristics, the dynamic characteristic is constructed for the vehicle at full load.

3.3.7. Tractive force under the condition of tire-road adhesion

Uninterrupted motion is possible under the condition:

$$P_к \geq P_w + P_\psi.$$

The above inequality combines the vehicle's design parameters with operational factors that cause motion resistance. However, it does not guarantee the absence of driving wheel slippage.

Uninterrupted vehicle motion without driving wheel slippage is possible only when the following condition is met:

$$P_\varphi \geq P_к \geq P_\psi + P_W.$$

If the total resistive force exceeds the tractive force, the engine will stop. If the tractive force exceeds the wheel-road adhesion force, the driving wheels will slip.

The condition for uniform motion without driving wheel slippage can be written as:

$$P_\varphi \geq P_к = P_\psi + P_W .$$

3.3.8. Vehicle acceleration

During operation, a vehicle often changes speed, especially in urban conditions. In urban conditions, the vehicle moves at a constant speed 15–25% of the time, and in acceleration mode 30–45% of the time. Therefore, an important dynamic quality is the vehicle's responsiveness, i.e., its ability to accelerate quickly.

The magnitude of acceleration that a vehicle can achieve under given driving conditions characterizes its traction properties: the greater the acceleration, the higher the average speed, and consequently, the better the vehicle's traction characteristics.

Indicators of responsiveness are: acceleration j_a, acceleration time t_a, and acceleration distance S_a. Acceleration indicators are determined experimentally during on-road vehicle tests. They can also be obtained by calculation.

It is assumed that the engine operates at full load. Such acceleration of the vehicle will be the maximum, and its magnitude (m/s²) will be

$$j_a = \frac{dV}{dt} = \frac{D_a - \psi}{\delta_{об}} \cdot g ,$$

where D_a - dynamic factor of the vehicle at full mass;

ψ - total road resistance coefficient;

δro - coefficient accounting for rotating masses;

g - acceleration due to gravity.

3.3.9. Vehicle power balance

During vehicle motion, the power at the driving wheels is spent on overcoming the resistive forces. The vehicle power balance equation has the form:

$$N_к = N_f + N_h + N_w + N_j$$

or

$$N_к = N_\psi + N_w + N_j .$$

The equation allows determining the vehicle's mode of motion at any moment.

Using this equation, the vehicle power balance graph is constructed (Fig. 3.16), which includes, depending on vehicle speed, the effective and tractive power in different gears, as well as the power spent to overcome resistive forces.

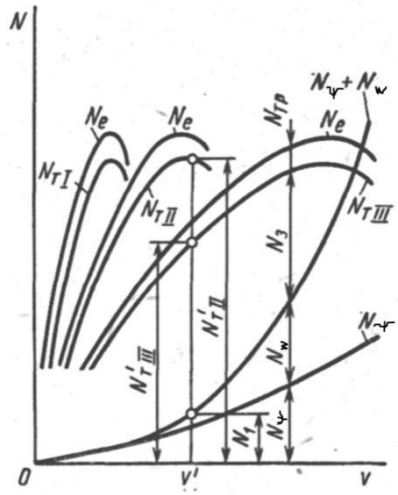

Figure 3.16. Vehicle Power Balance Graph

When constructing the power balance graph, the curves of effective power N_e and tractive power N_k are first plotted depending on the vehicle speed in different gears. Then, the curve of power spent to overcome road resistance N_ψ is plotted. From the N_ψ curve, the value of power spent to overcome air resistance N_w is marked.

The curve of total power $N_\psi+N_w$ determines the tractive power required for uniform vehicle motion.

For any speed, the segment N_z located between the curves N_k and $N_\psi+N_w$ characterizes the power reserve. At a given speed, the power reserve can be used for vehicle acceleration, overcoming additional road resistance (incline), or load (trailer).

At the same speed, the power reserve in lower gears is greater than in higher gears. Therefore, when increasing the transmission gear ratio, the power reserve increases. Higher road resistance is overcome in lower gears.

The difference between the curves N_e and N_k characterizes mechanical and hydraulic power losses in the transmission, which are taken into account by the transmission efficiency η_{tr}.

$$N_к = N_e \cdot \eta_{mp}\,.$$

Using the vehicle power balance graph, the traction-speed characteristics of the vehicle can be evaluated:

- determining the maximum vehicle speed;
- determining the maximum power required to overcome road resistance;
- determining the maximum incline the vehicle can overcome;
- determining vehicle acceleration.

3.3.10. Engine power using

The vehicle power balance graph is constructed based on the engine operating on the external-speed characteristic. In this case, the vehicle speed will increase. For uniform vehicle motion, it is necessary to reduce fuel supply to decrease the power at the wheels N_k, i.e., to change the essence of engine power utilization.

The essence of engine power utilization

$$k_{nom} = \frac{N_\psi + N_w}{N_e \cdot \eta_{mp}} = \frac{N_\psi + N_w}{N_к}\,.$$

This value depends on the type and condition of the road surface, vehicle speed, and the transmission gear ratio u_{tr}. The higher the value of u_{tr}, the less efficiently the engine power is utilized.

3.3.11. Influence of various factors on vehicle traction-speed characteristics

The vehicle's traction-speed characteristics largely depend on design factors. The most significant influence is exerted by the engine type, transmission efficiency, transmission gear ratios, vehicle mass, and aerodynamics.

3.3.12. Dimensionless characteristic of the "transparent" compound torque converter

Hydraulic transmissions are widely used in vehicle transmissions. Hydraulic transmissions facilitate vehicle control and improve driving safety. However, they reduce the vehicle's traction-speed characteristics and decrease fuel efficiency.

Vehicles use torque converters and sometimes fluid couplings. In fluid couplings and torque converters, the torque from the engine to the transmission is transmitted by low-viscosity oil under the action of hydrodynamic (velocity) pressure.

Fluid coupling

In a fluid coupling (Fig. 3.17 a), the driving part is the pump wheel 2, rigidly connected to the engine crankshaft 6. The turbine wheel (turbine) 1 is rigidly connected to the primary shaft 3 of the gearbox. The pump and turbine have radially arranged blades. The inner cavity of the fluid coupling is filled with oil.

When the pump wheel rotates, the oil, under the action of centrifugal force, moves to the outer part of the pump wheel, where it strikes the turbine blades and causes it to rotate.

From the turbine, the oil flows back into the pump wheel, creating a circulation loop, which ensures the transfer of torque from the engine to the transmission.



а б

Figure 3.17. Diagram of a fluid coupling (a) and a torque converter (b): 1 — turbine wheel; 2 — pump wheel; 3 — primary shaft of the gearbox; 4 — freewheel clutch; 5 — reactor; 6 — engine crankshaft

A characteristic feature of the fluid coupling is that it does not increase the torque when transmitting it from the engine to the transmission. The operating mode of the fluid coupling, as well as the torque converter, is characterized by their gear ratio:

$$i_{гм} = \frac{\omega_m}{\omega_н},$$

where ω_t, ω_n are the angular velocities of the turbine and pump wheels, respectively.

Torque converter

The torque converter is installed in the vehicle transmission along with a planetary gearbox (Fig. 3.17 b). The pump wheel 2 is rigidly connected to the engine crankshaft 6, and the turbine 1 is connected to the transmission shaft 3. Between the pump and turbine of the torque converter, on the freewheel clutch 4, a reactor 5 is installed, which redirects the oil flow to increase the torque.

A characteristic feature of the torque converter is the increase in torque when transmitting it from the engine to the transmission. The properties of the torque converter are evaluated by its dimensionless characteristic, shown in Fig. 3.18 (the fluid coupling characteristic is shown with dashed lines).

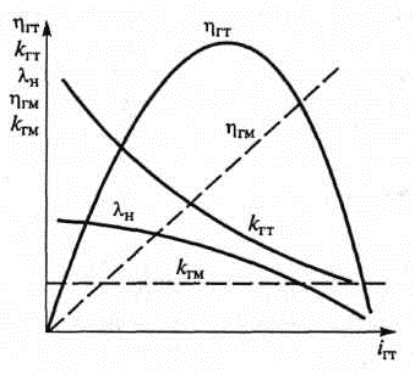

Figure 3.18. Dimensionless characteristics of the torque converter (solid lines) and fluid coupling (dashed lines)

The dimensionless characteristic shows the dependence of the efficiency coefficient η_{gt}, transformation coefficient k_{gt}, and pump torque coefficient λ_n on the gear ratio of the torque converter i_{gt}.

The dimensionless characteristic of the torque converter is determined experimentally. In this case, the efficiency, transformation, and pump torque coefficients are used in dimensionless form. The operating mode of the torque converter is determined by its gear ratio. The transformation coefficient characterizes the degree of torque increase provided by the torque converter:

$$k_{гт} = \frac{M_т}{M_н},$$

where $M_т = \lambda_т \cdot \rho_м \cdot \omega_т^2 \cdot D_{гт}^5$ – turbine torque ;

$M_н = \lambda_н \cdot \rho_м \cdot \omega_н^2 \cdot D_{гт}^5$ – pump torque;

D_{gt} – diameter of the torque converter; ρ_m – oil density; λ_t, λ_n – torque coefficients of the turbine and pump.

For a fluid coupling, the transformation coefficient kgm=1, because the torques on the pump and turbine shafts are equal ($M_н = M_т$).

The efficiency coefficient of the torque converter characterizes its energy properties:

$$\eta_{гт} = \frac{N_т}{N_н} = \frac{M_т \cdot \omega_т}{M_н \cdot \omega_н} = k_{гт} \cdot i_{гт},$$

where N_n, N_t are the power at the pump and turbine shafts of the torque converter.

The main disadvantage of torque converters is that the highest efficiency values (0.90–0.95) are achieved only within a narrow range of i_{gt} (0.6–0.8). At gear ratios higher or lower than the optimal, the efficiency of the torque converter decreases rapidly.

The efficiency of a fluid coupling is equal to

$$\eta_{гм} = \frac{\omega_т}{\omega_н} = i_{гм}.$$

As the angular velocity of the turbine increases, the efficiency of the fluid coupling rises proportionally to its gear ratio (Fig. 3.18).

Torque converters can be either transparent or non-transparent. The pump torque coefficient λnλ_n of the torque converter determines its transparency, i.e., its ability to vary the load on the pump shaft depending on the load on the turbine shaft.

In a non-transparent torque converter, changes in vehicle resistance do not affect the engine operating mode (λn=const). In a non-transparent torque converter, the transformation coefficient is 3…4, meaning the transmitted torque increases 3–4 times. This advantage of non-transparent torque converters contributes to their wide use in heavy-duty trucks and buses.

When using a transparent torque converter, changes in vehicle resistance cause changes in the engine operating mode even at a constant fuel supply ($\lambda_n \neq$const). As resistance increases, the angular velocity of the pump in a transparent torque converter, and therefore the angular velocity of the engine crankshaft, automatically decreases. When resistance decreases, the crankshaft speed and the speed of the vehicle with a transparent torque converter automatically increase.

For transparent torque converters, the transformation coefficient is 2.0–3.0, meaning the torque increases 2–3 times. Therefore, transparent torque converters are more widely used in passenger cars.

The degree of transparency of a torque converter is determined by the formula:

$$П = \frac{\lambda_{н\max}}{\lambda`_н},$$

where λn max is the maximum value of the pump torque coefficient, and λn′ is the value of the pump torque coefficient at k_{gt}=1.

If P=1.0…1.2, the torque converter is non-transparent. For P>1.2, the torque converter is transparent.

Thus, the traction-speed characteristics of a vehicle with a torque converter are slightly worse than those of a vehicle with a mechanical gearbox.

3.3.13. Improving traction-speed characteristics and fuel efficiency of a vehicle with a hydraulic transmission

To improve the traction-speed characteristics of vehicles with a hydraulic transmission, it is necessary to increase the efficiency of torque converters, i.e., to improve their conversion properties. For this purpose, torque converters are made compound, multi-stage, and lockable.

Compound torque converter

At a corresponding gear ratio, a compound torque converter switches to the fluid coupling mode (Fig. 3.19), which improves its conversion properties.

When the transformation coefficient $k_{gt}>1$, the freewheel clutch of the compound torque converter is locked, and the reactor is stationary. In this case, changes in the torque converter efficiency are characterized by the OA curve. At point A, the freewheel clutch disengages, and the reactor begins to rotate together with the turbine, without affecting the oil circulation. The reactor switches to the fluid coupling mode, and its efficiency is characterized by the AB segment.

As a result, at high gear ratios, i.e., at high vehicle speeds, the efficiency of the compound torque converter does not decrease.

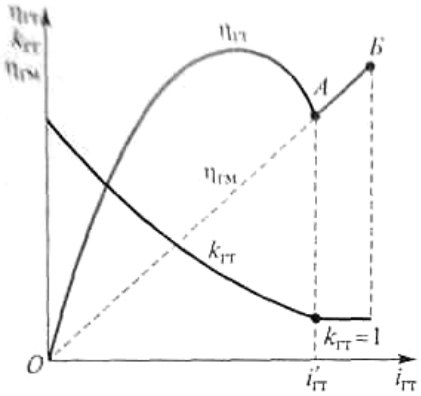

Figure 3.19. Characteristic of a compound torque converter

Mmulti-stage torque converter

Compared to a compound torque converter, a multi-stage torque converter has even better conversion properties. Instead of a single reactor, two reactor wheels—3 and 5—are installed on the freewheel clutches 4. Both reactors, working together, provide a change in efficiency along the line ОАБВ (Fig. 3.21).

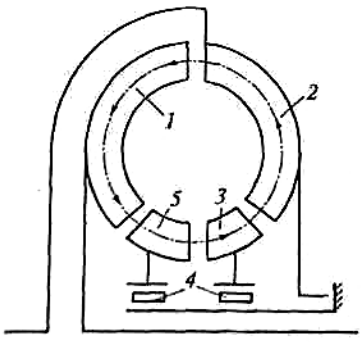

Figure 3.20. Diagram of a multi-stage torque converter

The design of the first reactor 3 (Fig. 3.20) is such that at point A (Fig. 3.21), the freewheel clutch of the first reactor disengages, and the reactor rotates together with the turbine, without affecting the oil flow. At a higher gear ratio, only the second reactor operates (curve АБ). At point Б, the freewheel clutch of the second reactor also disengages, and

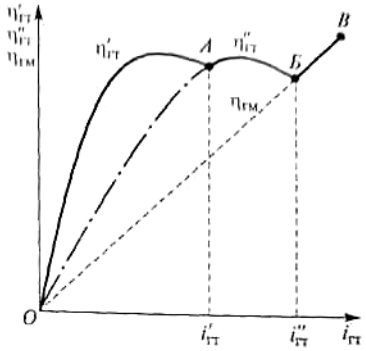

Figure 3.21. Characteristic of a multi-stage torque converter

The multi-stage torque converter switches to the fluid coupling mode (segment БВ). Thus, in a multi-stage compound torque converter, the change in efficiency is characterized by the broken line ОАБВ, which expands the range of high efficiency values.

Lockable torque converter

Similar to compound and multi-stage torque converters, a lockable torque converter allows improving the traction-speed characteristics and fuel efficiency of a vehicle.

Fig. 3,22 shows the characteristic of a lockable torque converter.

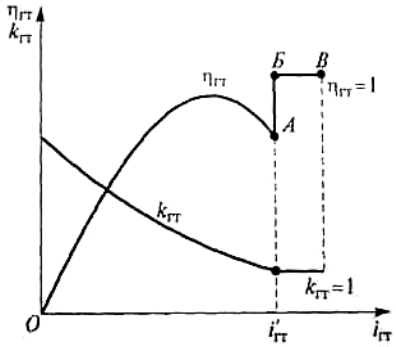

Figure 3,22. Characteristic of the locked hydrodynamic torque converter

At a transformation ratio of $k_{гт} = 1$, the pump and turbine wheels of the torque converter are locked using a friction clutch (point A in Fig. 3,22) and $\eta_{гт}$ becomes equal to 1.

3.3.14. Traction-speed tests of the vehicle

Traction-speed tests of a vehicle are conducted to determine the operational properties and characteristics of the vehicle. The test results are used for comparative evaluation of vehicle design both as a whole and of its individual assemblies and components; for studying the impact of specific design changes; and for selecting the type of rolling stock most suitable for the respective operating conditions.

Traction-speed tests of vehicles are conducted both under stationary and road conditions.

Stationary (laboratory) tests are carried out on special stands equipped with appropriate instruments. Investigating a particular phenomenon under such conditions is possible with high accuracy, eliminating the influence of factors that cannot be studied. A disadvantage of laboratory tests is the impossibility of creating actual conditions under which the vehicle operates.

Road tests are conducted on proving grounds or on selected sections of public roads using properly equipped vehicles. The results of such tests correspond to those obtained under actual operating conditions, and the accuracy of the obtained data, when the tests are conducted properly, can be entirely sufficient.

3.4. Vehicle fuel efficiency

One of the most important operational properties of a vehicle is fuel efficiency, because fuel costs account for 30-40% of the total transportation expenses.

Since fuel consumption under vehicle operating conditions depends on many factors, it can only be determined by calculation for some specific cases of motion (steady-state driving, acceleration, urban cycle).

Fuel consumption for vehicles is determined during road tests, taking into account fuel consumption during the operation of a large number of vehicles.

3.4.1. Fuel efficiency indicators

For assessing engine efficiency, the specific fuel consumption g_e, g/(kW·h), is used as an indicator. This indicator, characterizing engine efficiency, cannot serve for evaluating the fuel efficiency of the vehicle as a whole. The fuel efficiency indicator for vehicles is considered to be the amount of fuel G_n consumed per 100 km, in liters or kilograms.

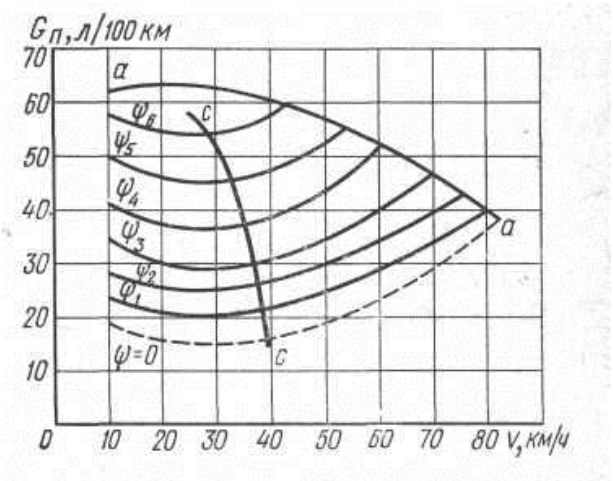

Figure 3.23. Economic characteristic of the vehicle

The economic characteristic of a vehicle (Fig. 3,23), expressed by road fuel consumption G_s as a function of driving speed V_a, provides a visual representation of the vehicle's fuel efficiency under various steady-state driving conditions. It consists of a series of curves $G_s = f(V_a)$, each corresponding to specific road conditions characterized by the road resistance coefficient ψ. The curves show how fuel consumption per 100 km changes at different speeds in the considered gear, depending on road conditions.

The curves are plotted for roads with different, gradually increasing values of the coefficient ψ. Maximum driving speeds decrease as road conditions deteriorate and the coefficient ψ increases. They are limited by curve a–a, which represents the locus of points where the vehicle consumes the maximum possible amount of fuel at the corresponding crankshaft speed.

The second curve c–c, connecting the inflection points of the curves, corresponds to minimum fuel consumption. It indicates the most economical driving speeds under various road conditions when operating in the given gear. At lower speeds, fuel consumption increases due to reduced engine efficiency; at higher speeds, it increases due to higher motion resistance.

Fuel consumption per 100 km of travel Q_s, in the general case of steady vehicle motion, can be determined using the following expression:

$$Q_s = 100 \cdot \frac{Q_n}{S},$$

where Q_n - fuel consumption (kg or l);

S - distance (km).

During a time t (h), the engine consumes Q_p (L) of fuel:

$$Q_п = \frac{g_e \cdot N_e \cdot t}{1000 \cdot \rho_n},$$

where N_e - effective engine power used for vehicle motion, kW;

ρ_p – the specific fuel density, kg/l (0.76 – gasoline, 0.86 – diesel).

During the same time t, the vehicle covers a distance:

$$S = 3.6 \cdot V \cdot t,$$

where V - vehicle speed (m/s).

By substituting the obtained values and performing simplification, we get the fuel consumption per distance:

$$Q_s = \frac{g_e \cdot N_e}{36 \cdot \rho_i \cdot V}.$$

3.4.2. Influence of operational factors on fuel efficiency

The effective engine power is spent on overcoming the power of road resistances:

$$N_e = \frac{N_\psi + N_w + N_j}{\eta_{mp}}.$$

By performing some transformations, we obtain:

$$Q_s = \frac{g_e \cdot (N_\psi + N_w + N_j)}{36 \cdot \eta_{mp} \cdot \rho_n \cdot V}$$

or

$$Q_s = \frac{g_e}{36 \cdot \eta_{mp} \cdot \rho_n} \cdot (G \cdot \psi + k \cdot F \cdot V^2 + \frac{G \cdot \delta_{об} \cdot j}{g}).$$

During steady motion, when j_a = 0, the equation takes the form:

$$Q_s = \frac{g_e}{36 \cdot \eta_{mp} \cdot \rho_n} \cdot (f \cdot G \cdot \cos\alpha + G \cdot \sin\alpha + k \cdot F \cdot V^2)$$

This formula establishes the dependence of fuel consumption per 100 km of vehicle travel on loading, road, and speed conditions, as well as on the vehicle's aerodynamics, weight, and engine efficiency.

The specific fuel consumption is also influenced by engine crankshaft speed and the degree of engine power utilization. The specific fuel consumption g_e increases both at minimum and maximum engine speeds. Its value also depends on the engine operating mode and varies over a fairly wide range.

Incorrect adjustment of the fuel supply and ignition systems, as well as the engine's distribution mechanism, leads to increased fuel consumption.

The thermal regime of the engine has a significant effect on fuel efficiency. Excessive engine cooling sharply increases engine heat losses, reducing the engine's indicated efficiency.

Incorrect adjustment of the main gear, radial-thrust bearings, and brakes, low tire pressure, or improperly adjusted wheel alignment cause additional motion resistance and, as a result, higher fuel consumption.

When a vehicle operates as part of a road train, fuel consumption per unit distance increases; however, this increase is not proportional to the increase in motion resistance forces, because when towing trailers or semi-trailers, the degree of engine power utilization is higher than when a single vehicle is moving, which reduces the specific effective fuel consumption. On paved roads without steep or prolonged climbs, using trailers can save 20–25% of fuel.

The number of vehicle stops during motion significantly affects fuel consumption. For example, if fuel consumption is measured for the same vehicle on a route without stops and with stops every kilometer along the same section, fuel consumption in the second case will be 10–25% higher.

Frequent braking of the vehicle has a similar effect on fuel consumption. Increased fuel consumption in this case is due to unproductive energy losses during braking and acceleration.

3.4.3. Ways to improve vehicle fuel efficiency

Vehicle fuel efficiency cannot be considered separately from the general problem of rational use of energy resources. For this reason, using cheaper fuels, especially liquefied and compressed gases, instead of relatively expensive gasoline is of great importance.

Vehicles with diesel engines are more economical, with fuel consumption 25–30% lower than gasoline engines.

Improving vehicle engine fuel efficiency can also be achieved by improving the design of both the engine and the vehicle as a whole; better utilization of engine power; maintaining the vehicle in proper technical condition; and using rational driving modes.

Vehicle efficiency can be increased by improving its design: reducing vehicle weight, improving aerodynamics, and reducing transmission and tire losses.

3.4.4. Fuel efficiency indicators of a vehicle with a hydraulic transmission

The presence of a hydraulic transmission leads to additional power losses in the vehicle transmission compared to a mechanical transmission.

Taking into account the power losses in the hydraulic transmission, the fuel consumption equation can be written in the following form:

$$Q_s = \frac{g_e}{36 \cdot \eta_{тр_мех} \cdot \eta_{гт} \cdot \rho_n} \cdot (G \cdot \psi + k \cdot F \cdot V^2 + \frac{G \cdot \delta_{об} \cdot j}{g}),$$

where η_{tr_mex} - efficiency of the mechanical part of the transmission;

η_{tc} — the efficiency of the torque converter.

To determine the fuel efficiency indicators of a vehicle with a torque converter, the dimensionless characteristic of the torque converter and the experimentally obtained dependencies of the engine's effective torque and specific fuel consumption g_e on the crankshaft angular velocity ω_e at different levels of engine power utilization are required.

This can be explained by the relatively low efficiency of the torque converter and the influence of vehicle speed on its value. Therefore, the fuel efficiency of a vehicle with a torque converter is lower than that of a vehicle with a stepped gearbox. Studies have shown that, in most cases, fuel consumption in vehicles with a hydraulic transmission is 5–10% higher than in vehicles with a mechanical transmission.

However, observations of ordinary drivers driving styles show that incorrect operation of a manual gearbox often leads to higher fuel consumption and greater engine wear than with an automatic transmission.

3.5 Vehicle traction calculation

3.5.1 Determination of the main parameters of the engine and vehicle transmission

The maximum engine power is determined by the formula:

$$N_{e\max} = \frac{M \cdot g \cdot f_v \cdot V_{\max} + k \cdot F \cdot V_{\max}^3}{1000 \cdot \eta_m \cdot \left(a_1 \cdot \beta_v + a_2 \cdot \beta_v^2 - a_3 \cdot \beta_v^3\right)}, кВт$$

where M - total vehicle mass;

g = 9.81 m/s² — acceleration due to gravity;

f_v — rolling resistance coefficient, which is determined at maximum speed using the formula:

$f_v = 0,01 \cdot \left(1 + 65 \cdot 10^{-5} \cdot V_{\max}^2\right)$,

k — air resistance coefficient;
F — frontal area;
η_{tr} — transmission efficiency;
β_v — speed coefficient;
a_1, a_2, a_3 — coefficients characterizing the external speed characteristic of the engine.

The final drive ratio is determined from the condition of achieving the vehicle's maximum speed using the formula:

$$u_0 = \frac{n_N \cdot \beta_V \cdot r_k}{9,55 \cdot V_{\max} \cdot u_p},$$

where n_N_- engine crankshaft speed at maximum power;
r_k — rolling radius of the wheel;
u_p — gear ratio of the gear at which maximum speed is achieved (usually $u_p \approx 1$).

The first gear ratio is determined from the condition of overcoming the specified maximum total road resistance, characterized by the coefficient

$$u_1 = \frac{\psi_{\max} \cdot M \cdot g \cdot r_\partial}{M_{e\max} \cdot U_0 \cdot \eta_m},$$

where $\psi_{\max}$ — total road resistance coefficient;
$r_\partial \approx r_k$ — dynamic wheel radius;
$M_{e\max}$—maximum engine torque, achieved at the rotational speed n_M.

The gear ratios of the intermediate gears are determined so that they form a geometric progression. If an overdrive gear is present

$U_k = \sqrt[m-2]{U_1^{m-k-1}}$,

where. k - gear number;
m - number of gears.

After determining the main parameters of the engine and transmission, graphs are constructed, that characterize the traction-speed properties of the vehicle.

3.5.2. Calculation and construction of diagrams

The limits of the working range of the engine shaft speed are taken within from $n_{\min} = 0,20 \cdot n_N$ to $n_{\max} = \beta_v \cdot n_N$, and this range is divided into 10–12 parts.

For constructing the curves of the external speed characteristic $N_e(n)$ and $M_e(n)$, the Leiderman formula is used:

$$N_e = N_{e\max} \cdot \left\{ a_1 \cdot \frac{n}{n_N} + a_2 \cdot \left(\frac{n}{n_N}\right)^2 - a_3 \cdot \left(\frac{n}{n_N}\right)^3 \right\}, \kappa Bm.$$

Accordingly, the values of the engine torque are determined by the formula:

$$M_e = 9550 \cdot \frac{N_e}{n}, Нм$$

A series of $N_{(V)}$ curves of the power balance diagram are calculated using the formulas:

N_k — power delivered to the wheels,

$$N_к = \eta_m \cdot N_e;$$

N_ψ – power lost in overcoming the total road resistance

$$N_\psi = \frac{f_v \cdot M \cdot g \cdot V + M \cdot g \cdot \sin\alpha}{1000}, \hat{e}\hat{A}\grave{o},$$

N_w – power lost in overcoming air resistance,

$$N_w = \frac{k \cdot F \cdot V^3}{1000}, \kappa Bm.$$

The corresponding driving speeds are determined by the relation:

$$V = \frac{r_k \cdot n}{9{,}55 \cdot u_o \cdot u_k \cdot u_{\partial к}}, м / с.$$

The dynamic factor is determined by the formula:

$$D = \frac{P_a}{M \cdot g},$$

where P_a – free tractive force,

$$P_a = P_к - P_w, \ H;$$

$Ð_ê$ – tractive force at the wheels,

$$P_к = \frac{M_e \cdot u_0 \cdot u_k \cdot u_{\partial к} \cdot \eta_m}{r_k}, H;$$

P_w – air resistance force,

$$P_w = k \cdot F \cdot V^2, H.$$

The vehicle acceleration in the gears is determined by the formula:

$$j_a = \frac{(D - \psi) \cdot g}{\delta},$$

where $\psi = f = 0{,}01 \cdot \left(1 + 65 \cdot 10^{-5} \cdot V^2\right)$ – total road resistance coefficient during motion on a level road,

δ – coefficient accounting for the inertia of rotating masses; determined by the formula:

$$\delta = 1{,}00 + 0{,}05 \cdot u_к^2 \cdot u_{\partial к}^2.$$

Calculation results $N_к$, N_ψ, N_w, V, D, P_a, $P_к$, P_w, j_a i δ are entered into a table. Based on these values, diagrams are constructed $N(V)$, $D(V)$, $j_a(V)$

The time $t_p(V)$ and distance $S_p(V)$ curves of acceleration are constructed using a graphical-analytical method based on the vehicle acceleration $j_a(V)$ diagram. For this, on the acceleration diagram, it is necessary to conditionally mark the sections of vehicle speed corresponding to its acceleration in 1st, 2nd, 3rd, and remaining gears. Then each of these sections is divided into 4–6 intervals.

3.5.3. Features of traction calculation for a vehicle transmission with a hydraulic drive

The main feature of the design calculation of such a transmission is the selection of the active diameter D_{IT} of the torque converter.

The calculation of the diameter D_{IT} is based on the fact that the output characteristic, regardless of its size, is the same for torque converters with geometrically similar wheels. Therefore, by preliminarily selecting a prototype differing only in size D_{IT}, one can use its output characteristic.

From the equation

$$M_{Hac} = \lambda_H \cdot \rho_M \cdot D_{IT}{}^5 \cdot \omega_H^2 ,$$

where $\rho = кг/м^3$;

λ_H – pump coefficient;

ω – pump angular velocity we have

$$D_{IT} = \sqrt[5]{\frac{M_{HP}}{\lambda_{HP} \cdot \rho_M \cdot \omega_{HP}^2}} .$$

All parameters are for the design operating mode.

The design mode is selected based on ensuring the best traction-speed characteristics of the vehicle and fuel efficiency, which usually requires a compromise.

If the design mode is taken as the starting-from-rest condition, then λ_{HP} the output characteristic of the prototype is determined at $i_{IT} = 0$.

Design values of ω_{HP} when the pump is directly connected to the crankshaft for:

gasoline engines (0.3...0.45) ω_N

trucks with gasoline engines (0.5...0.85) ω_N

for vehicles with diesel engines (0.75...0.85) ω_N

($\omega_N = \frac{\pi \cdot n_N}{30}$ – pump angular velocity at $N_{\max}$)

The design torque M_{HP} is taken equal M_K to the engine torque at the rotation speed n_p.

The final drive ratio when using a compound or locked torque converter in the transmission is selected in the same way as for a mechanical transmission.

3.6 Braking properties

For better performance in transporting goods and passengers, it is necessary to increase the intensity of vehicle movement. In this regard, the efficiency and safety of vehicle braking become particularly important.

High-speed vehicle movement is impossible without a guarantee that, if necessary, the speed can be reduced to a safe level or brought to a complete stop.

Braking properties are among the most important operational characteristics that determine the active safety of a vehicle. They are regulated by international standards (UN ECE Regulation No. 13).

3.6.1. Types of braking

Braking is the absorption of the vehicle's kinetic energy due to its conversion into the thermal energy of the braking mechanisms.

During this process, the vehicle speed decreases by a certain amount or until the vehicle comes to a complete stop.

During braking, the following types of braking are encountered:

– service braking j = 1.5–2.5 m/s² (when it is known in advance where it is necessary to stop or reduce the vehicle speed. This type of braking accounts for 70–80% of the total operating time of the braking system);

– emergency braking j = 8–9 m/s² (in the event of a sudden change in road conditions, this type of braking accounts for 5% of the time);

– holding the vehicle in place when it is stationary (5–10% of braking time);

– prolonged braking with low efficiency (driving on mountain roads, in urban traffic. In the city, such braking accounts for up to 10% of the time, in mountainous areas up to 40–50%).

3.6.2. External forces acting on the vehicle during braking

During braking, an external force must be applied to the vehicle in the direction opposite to the driving forces.

In general, the equation of motion of the vehicle during braking on an incline (tractive force $P_k = 0$) is composed by projecting all forces acting on the vehicle during braking onto the road plane (Fig. 3.24).

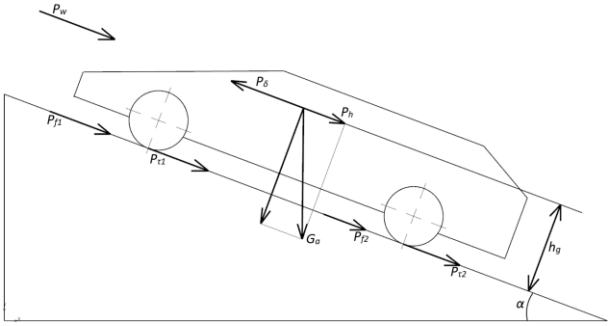

Figure 3.24. Diagram of forces acting on a vehicle during braking

$$P_{f1} + P_{f2} + P_{\tau 1} + P_{\tau 2} + P_h + P_w - P_j = 0,$$

where P_{f1}, P_{f2} – rolling resistance forces;

$P_{\tau 1}$, $P_{\tau 2}$ – braking forces at the wheels;

P_h, P_w- hill and air resistance forces;

P_j – inertia force.

Under the action of friction forces in the braking mechanism, a braking torque M_τ arises at the wheel and a tangential reaction R_τ, which is applied to the wheel from the supporting surface:

$$P_\tau = \frac{M_\tau}{r_д},$$

where r_d — dynamic wheel radius.

The maximum braking force under the condition of wheel-road adhesion

$$P_\tau = \varphi \cdot R_z \cdot \cos\alpha,$$

where φ – wheel-road adhesion coefficient;

R_z – normal reaction of the road on the wheel.

3.6.3. Deceleration during braking

Deceleration during braking is negative acceleration. In the braking process, the driving force is the inertia force.

:

$$P_j = P_\tau + P_f + P_w + P_h.$$

Some transformations and assumptions can be made. The braking force is equal to the wheel-road adhesion force:

$$P_\tau = \varphi \cdot G_a \cdot \cos\alpha.$$

The air resistance force can be neglacted P_w=0.

Inertia force

$$P_j = \frac{G_a}{g} \cdot j_a \cdot \delta_{об}.$$

Total road resistance force

$$P_\psi = P_f \pm P_h = f \cdot G_a \cdot \cos\alpha \pm G_a \cdot \sin\alpha$$

$$P_{\psi} = G_a \cdot (f \cdot \cos\alpha \pm \sin\alpha)$$

We write the equation by substituting the values. Then equation will take the form:

$$\frac{G_a}{g} \cdot j_a \cdot \delta_{об} = \varphi \cdot G_a \cdot \cos\alpha + f \cdot G_a \cdot \cos\alpha \pm G_a \cdot \sin\alpha$$

From this, we have:

$$j_a = \frac{\varphi \cdot \cos\alpha + f \cdot \cos\alpha \pm \sin\alpha}{\delta_{об}} \cdot g$$

Considering that on a level road with a good solid surface a = 0, and f is much smaller than φ, equation can be written as

$$j = \frac{\varphi}{\delta_{об}} \cdot g$$

During braking with the engine disengaged, the deceleration is equal to

$$j = \varphi \cdot g .$$

The maximum deceleration for roads with asphalt pavement is 7–8 m/s².

The emergency braking process can be represented as a diagram of deceleration change during braking (Fig. 3.25).

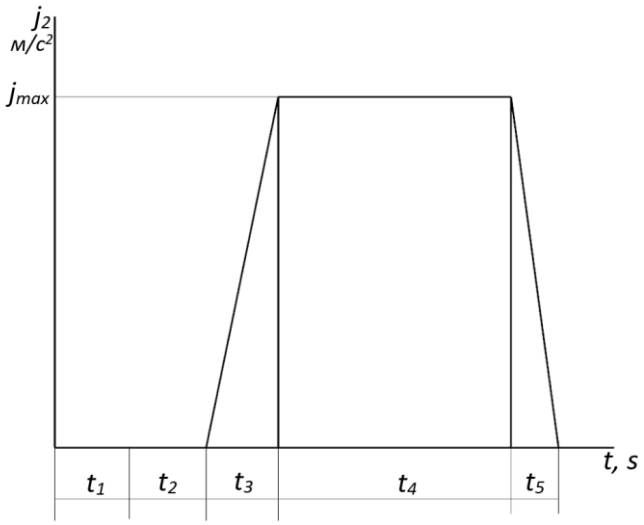

Figure 3.25. Brake diagram

On the brake diagram, the following are indicated:

t_1 — driver reaction time (time from the signal to the foot touching the brake pedal, 0.2–1.2 s);

t_2 — brake actuation time (time until the brake pads contact the friction surface), for a hydraulic drive 0.1–0.2 s, for a pneumatic drive 0.4–0.5 s;

t_3 — time for deceleration to increase from zero to max, for a hydraulic drive 0.02–0.4 s, for a single vehicle pneumatic drive 0.6s, for a road train 1.0s;

t_4 — time of braking at max (steady) efficiency:

$$t_4 = \frac{\Delta V}{j_a} = \frac{\Delta V}{\varphi \cdot g},$$

t_5 — brake release time.

Vehicle stopping time during emergency braking, s

$$t = t_1 + t_2 + t_3 + \frac{\Delta V}{\varphi \cdot g}.$$

3.6.4. Braking distance

Considering that during vehicle braking its kinetic energy is absorbed, the equation can be written as:

$$P_j \cdot S = \frac{G_a}{2 \cdot g} \cdot (V_n^2 - V_к^2),$$

where V_n, V_k — initial and final vehicle speeds during braking.

During full stop braking, $V_k = 0$, and the braking distance is equal to:

$$S = \frac{G_a \cdot V_n^2}{2 \cdot g \cdot P_j}.$$

If the value of the inertia force (7.2) is substituted into the equation and transformations are made, we obtain:

$$S = \frac{V_n^2 \cdot \delta}{2 \cdot g \cdot (\varphi \cdot \cos\alpha + f \cdot \cos\alpha \pm \sin\alpha)}.$$

During braking of a vehicle on a level asphalt-concrete road with the engine disengaged, the braking distance is equal to:

$$S = \frac{V_n^2}{2 \cdot g \cdot \varphi}.$$

Considering the driver's reaction time and brake actuation, the distance to a full stop of the vehicle on a hard, level road is equal to:

$$S = V_n \cdot (t_1 + t_2 + t_3) + \frac{V_n^2}{2 \cdot g \cdot \varphi}.$$

For example, for V_n = 22.2 m/s (80 km/h), t_1 = 1 s, t_2 = 0.4 s, t_3 = 0.5 s, the braking distance will be:

$$S = 22 \cdot (1 + 0.4 + 0.5) + \frac{22^2}{2 \cdot 9.81 \cdot 0.7} = 42.2 + 34.3 = 76.5 \text{ м}.$$

In this case, the distance the vehicle travels before the start of active braking is 42.2 m, and the distance of actual braking is 34.3 m. The time spent on driver reaction and brake system actuation significantly affects driving safety.

3.6.5. Normal reactions of the road on the vehicle wheels during braking

During braking, a redistribution of normal reactions occurs. For example, consider braking of a two-axle vehicle on a level, horizontal road (Fig. 3.26).

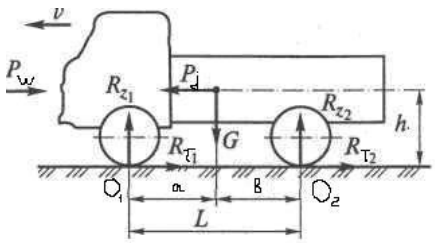

Figure 3.26. Redistribution of normal reactions of a two-axle vehicle

It is assumed that for vehicles, air resistance does not affect the reaction distribution, and rolling resistance forces are small compared to braking forces. Reactions can be determined from the moment equations relative to the points of wheel contact with the road:

$$\sum M_{O_2} = 0: \; R_{z_1} \cdot L - G_a \cdot b - P_j \cdot h = 0;$$

$$R_{z_1} = \frac{1}{L} \cdot (G_a \cdot b + P_j \cdot h);$$

$$\sum M_{O_1} = 0: \; -R_{z_2} \cdot L - G_a \cdot a - P_j \cdot h = 0;$$

$$R_{z_2} = \frac{1}{L} \cdot (G_a \cdot a - P_j \cdot h).$$

From the equations, it can be seen that during vehicle braking, the reaction on the front wheels increases, while that on the rear wheels decreases. The degree of their redistribution depends on the braking intensity and the height of the center of mass.

For braking a vehicle on a level, hard road, the maximum inertia force is limited by the wheel-road adhesion force:

$$P_j = P_\varphi = \varphi \cdot G_a.$$

Then the values of the normal reactions are determined by the expressions:

$$R_{z_1} = \frac{G_a}{L} \cdot (b + \gamma_\tau \cdot h),$$

$$R_{z_2} = \frac{G_a}{L} \cdot (a - \gamma_\tau \cdot h),$$

where $\gamma_\tau = \frac{P_\tau}{G_a}$ – specific braking force.

To ensure the most effective braking, the braking forces must be distributed between the vehicle axles proportionally to the normal reactions of the road.

If braking occurs at maximum intensity and the total braking force is distributed between the vehicle axles such that the adhesion properties of the road are fully utilized by both axles

$$P_\tau = \varphi \cdot R_{z1} + \varphi \cdot R_{z2} = \varphi \cdot G_a.$$

Under conditions of full adhesion utilization, the specific braking force of the vehicle is equal to the adhesion coefficient:

$$\gamma_\tau = \varphi.$$

Then it can be expressed as:

$$R_{z_1} = \frac{G_a}{L} \cdot (b + \varphi \cdot h);$$

$$R_{z_2} = \frac{G_a}{L} \cdot (a - \varphi \cdot h).$$

To ensure equal wheel slip on all axles, the specific braking forces must be the same:

$$\gamma_{\varepsilon_i} = \frac{P_{\tau i}}{R_{zi}},$$

where $P_{\tau i}$, R_{zi} — braking force and normal road reaction acting on the i-th axle.

From the formula, it can be seen

$$\beta_\tau = \frac{b + \varphi \cdot h}{a - \varphi \cdot h} \neq const.$$

3.6.6. Distribution of the braking force P_τ across the wheels of different vehicle axles

The desired distribution of the braking force P_τ is such a distribution across the wheels that ensures full utilization of the wheel-road adhesion force of these axles, resulting in a minimum braking distance $S_{g\ min}$.

$$S_{\varepsilon_\min} = \frac{V^2}{2 \cdot g \cdot \varphi}$$

In this case, the braking force distribution coefficient P_τ across the front and rear axle wheels will be equal to

$$\beta_\tau = \frac{P_{\tau 1_\max}}{P_{\tau 2_\max}} = \frac{\varphi \cdot R_{z1}}{\varphi \cdot R_{z2}} = \frac{R_{z1}}{R_{z2}} .$$

Thus, the desired distribution of braking forces across the axles of a two-axle vehicle is characterized by the theoretical braking force distribution coefficient.

$$\beta_\tau = \frac{b + \varphi \cdot h}{a - \varphi \cdot h}$$

Analyzing formula (7.4), it can be concluded that $\beta_\tau \neq$ const. And since $\beta_\tau \neq$ const, to achieve the desired distribution of braking forces, the vehicle requires a regulated braking system, which ensures $S_{g\ min}$ during braking in any weight condition and on different road surfaces.

3.6.7. Actual distribution of braking forces in an unregulated braking system

In a braking system, the force is directly proportional to the pressure of the brake fluid in the brake circuit (Fig. 3.27). Thus, in an unregulated braking system, the fluid pressure at all points is the same and equals.

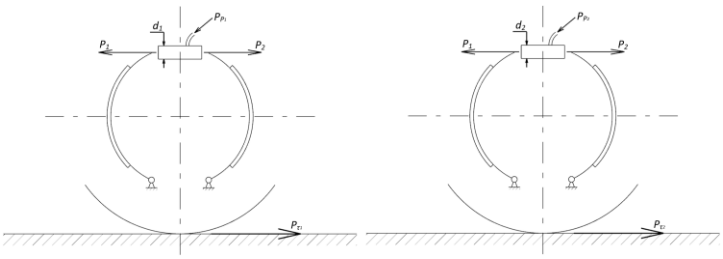

Figure 3.27. Before determining the braking forces on different vehicle axles

Then the actual braking force distribution coefficient is equal to

$$\beta_\partial = \frac{P_{\tau_1}}{P_{\tau_2}} = \frac{P_1}{P_2} = \frac{\frac{\pi d_1^2}{4} \cdot P_P}{\frac{\pi d_2^2}{4} \cdot P_P} = \frac{d_1^2}{d_2^2} \quad .$$

From the formula, it can be seen that in an unregulated braking system $\beta_\partial = \frac{d_1^2}{d_2^2}$ It is a constant value and depends on the ratio of the diameters of the wheel cylinders. With such a braking system, the front and rear wheels will lock (skid) at different times, which reduces braking stability and efficiency. To improve braking effectiveness, the braking forces must be proportional to the vertical reactions acting on the wheels under all braking conditions.

3.6.8. Analysis of vehicle stability during braking with unregulated systems

To analyze vehicle stability during braking, it is necessary to consider the graphs of the actual β_d and theoretical β_t braking force distribution coefficients, shown in Fig. 3.28.

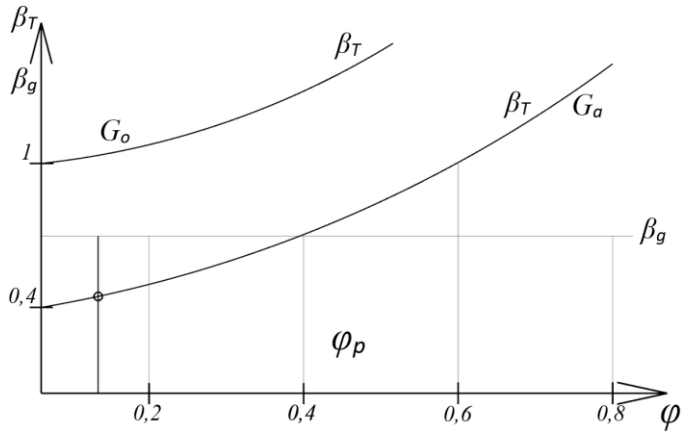

Figure 3.28. Graphs of the actual β_d and theoretical β_t braking force distribution coefficients

Considering that $\beta_д = \frac{d_1^2}{d_2^2}$ = const, and $\beta_\tau = \frac{P_{\tau_1}}{P_{\tau_2}} = \frac{R_{z_1} \cdot \phi}{R_{z_2} \cdot \phi}$ can vary, three different cases of the adhesion coefficient can be considered.

1.For a slippery road

$$\varphi < \varphi_{розр} \Rightarrow \beta_д > \beta_\tau.$$

In this case, the braking force on the rear wheels will be less than the adhesion force of the rear wheels to the road:

$$P_{\tau_2} < R_{z_2} \cdot \varphi .$$

That is, in this case, the adhesion potential of the rear axle wheels is underutilized, leading to an increase in Sg compared to Sg_min. The front axle wheels will lock first, creating a risk of loss of steering control.

2. For the ideal case, when the actual adhesion coefficient equals the calculated one:

$$\varphi = \varphi_p \Rightarrow \beta_m = \beta_д .$$

The braking forces on the wheels simultaneously reach their maximum possible values according to the wheel-road adhesion condition. In this case, the braking distance will be minimal. Front and rear wheels lock simultaneously.

3. For a road with a high adhesion coefficient:

$$\varphi > \varphi_p \Rightarrow \beta_д < \beta_m .$$

In this case, the braking force on the front wheels will be less than the adhesion force of the front wheels to the road:

$$P_{\tau_1} < R_{z_1} \cdot \varphi .$$

In this case, the adhesion of the front wheels is underutilized, which leads to an increase in the actual braking distance:

$$S_г > S_{г_\min} .$$

The rear wheels lock first, which creates a risk of the vehicle skidding.

3.6.9. Analysis of vehicle stability during braking with a regulated system

The braking efficiency of a vehicle while maintaining its stability can be improved by installing brake force regulators in the braking system. These regulators provide a distribution of braking forces between the axles that approaches optimal during emergency braking under various road conditions and different vehicle load levels.

Brake force regulators are divided into:

- regulators without feedback;
- regulators with feedback.

Regulators without feedback change the ratio of braking forces depending on the intensity of braking and the vehicle load. The maximum braking moments depend on the force applied by the driver to the brake pedal. Such regulators, while providing a distribution of braking forces close to optimal, do not prevent wheel locking.

When using feedback regulators, automatic devices reduce the braking moment from the initial wheel lock moment so that its average value is maintained at the maximum according to the wheel-road adhesion condition.

The presence of a brake force regulator in the braking system brings the actual distribution of braking forces closer to the theoretical ($\beta_д \rightarrow \beta_m$), and consequently, the actual braking distance approaches the minimum theoretical value ($S_г \rightarrow S_{г_\min}$).

3.6.10. Service braking

Service braking is the mode in which the braking forces on the vehicle wheels do not reach the maximum possible values under the wheel-road adhesion condition. Service braking is the most common type. The maximum deceleration during service braking does not exceed 4 m/s², usually 1.5–2.5m/s².

During vehicle operation, various types of service braking are used:

- braking with the engine disengaged;
- braking with the engine engaged;
- engine braking;
- braking with periodic interruption of brake action;
- braking using a retarder.

3.6.11. Influence of various factors on vehicle braking properties

Various design and operational factors affect the braking properties of a vehicle.

Brake mechanisms and their technical condition

Drum brake mechanisms are used on the front and rear wheels of trucks and buses. Passenger cars typically have disc brakes on the front wheels and drum brakes on the rear wheels. Drum brakes are generally more effective during braking, while disc brakes are more stable. Disc brakes are lighter, more compact, and better cooled compared to drum brakes. However, they experience greater wear of friction linings and are less protected from dirt. The technical condition of brake mechanisms significantly affects the operational performance of the vehicle and greatly influences traffic safety. One of the main causes of accidents is brake malfunction (oil contamination, wear, or improper adjustment).

Road surface and tire tread

The condition of the road surface and tire tread determines the ability to utilize the braking force generated by the brake mechanisms. New road surfaces provide the best adhesion, as microscopic asperities enhance tire-road grip. As the road surface wears, these asperities are smoothed, reducing the adhesion coefficient of the wheels to the road.

During winter, when roads are icy, the coefficient of adhesion significantly decreases. To improve it, tires with special tread patterns or studs should be used.

Brake force regulator

Maximum braking efficiency is achieved when all wheels of the vehicle maintain adhesion, which is only possible with an optimal distribution of braking forces among the wheels. A brake force regulator

adjusts the braking force based on the load on the rear axle. This reduces the likelihood of rear-wheel skidding and increases vehicle stability against oversteer.

Anti-lock braking systems (ABS)

ABS prevents wheel lockup during braking by regulating the braking moment and ensuring simultaneous braking of all wheels. This achieves maximum braking efficiency and improves vehicle stability and safety. ABS provides the greatest improvement in braking efficiency on slippery roads.

3.6.12. Influence of braking characteristics on average speed

Braking properties affect not only road safety but also the average travel speed. Drivers intuitively choose speed based on the braking characteristics of the vehicle. The permissible speed, considering vehicle braking capabilities, depends on:

- braking distance;
- visibility distance to oncoming vehicles or obstacles;
- roadway illumination by headlights (high and low beam).

3.6.13. Assessment of vehicle braking properties

Braking properties of vehicles largely determine road safety, so strict requirements are imposed on braking system efficiency.

Efficiency assessment for service and auxiliary braking systems is done using braking distance and steady deceleration, while parking and auxiliary systems are evaluated based on the total braking force they can develop.

Braking distance is the distance traveled by the vehicle from the start of braking until complete stop.

The start of braking is considered the moment the driver touches the brake pedal.

During evaluation, braking systems operate at maximum efficiency, so deceleration on the main part of the braking distance is approximately constant — this is called steady deceleration.

Braking system efficiency is determined through road or bench tests.

The effectiveness of brake mechanisms depends strongly on the temperature of the friction pairs, so tests are conducted under different thermal conditions.

Braking tests follow international standards (UN ECE Regulation No. 13) and include three types:

- Type-I test— evaluation of the service brake system with cold brakes;
- Type-II test — evaluation with brakes preheated by prior braking;
- Type-III test— evaluation after heating brakes on long downhill runs.

To measure the braking performance of a vehicle, the deceleration during braking j_g in m/s², braking time t_g in s, and braking distance S_g in m are used.

The application of international regulations in assessing the effectiveness of a vehicle's braking characteristics imposes special requirements on automobile manufacturers regarding the safety of the vehicle.

Before the start of production, vehicles must undergo certification concerning road safety, which significantly increases traffic safety.

3.7 Stability

Vehicle stability is the most important operational characteristic, on which road safety largely depends. A sign of the vehicle losing stability is its skidding or overturning. Depending on the direction of the vehicle's skidding or overturning, stability can be longitudinal or transverse.

3.7.1. Transverse stability

Indicators of a vehicle's transverse stability are the critical speed for lateral skidding, the critical speed for overturning, the critical transverse slope angle of the road for lateral skidding, the critical transverse slope angle of the road for overturning, and the transverse stability coefficient.

3.7.1.1. Critical speed for lateral skidding

During uniform vehicle motion on a curve on a horizontal road (Fig. 3.29), lateral skidding of its wheels may occur as a result of the action of the lateral force RuR_u (centrifugal). At the moment when the lateral force becomes equal to the wheel-road adhesion force.

$$P_y = P_\varphi;$$

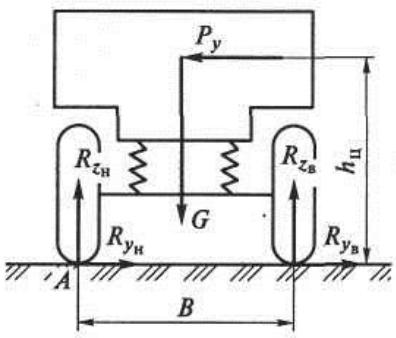

Figure 3.29. Diagram for determining the critical speeds of a vehicle for skidding and overturning:A — the point relative to which the vehicle overturns

Forces acting during vehicle motion along a curve.
The centrifugal force is equal to:

$$P_y = \frac{m \cdot V_a^2}{R} = \frac{G_a \cdot V_a^2}{g \cdot R}.$$

The wheel-road adhesion force is equal to:

$$P_\varphi = \varphi \cdot G_a,$$

where φ is the wheel-road adhesion coefficient.

Substituting the values of the centrifugal force and the adhesion force, we obtain:

$$V_{кр.к} = \sqrt{\varphi \cdot g \cdot R}.$$

The critical speed for lateral skidding $V_{cr.sk}$ is the maximum speed at which vehicle skidding is possible.

3.7.1.2. Critical speed for overturning

When turning on a horizontal road, the lateral force P_y (Fig. 3.29) acting on the vehicle can cause not only lateral skidding but also overturning. Vehicle overturning occurs relative to its outer wheels (point A).

At the moment when the inner wheels lift off the road, the overturning moment created by the lateral force is balanced by the restoring moment caused by the vehicle's weight:

$$M_{пер.} = M_{відн.}$$

The overturning moment is equal to

$$M_{пер.} = P_y \cdot h = \frac{G_a}{g} \cdot \frac{V^2}{R} \cdot h .$$

The restoring moment is equal to

$$M_{відн.} = G_a \cdot \frac{B}{2} .$$

Substituting the values of the moments into this expression and after transformations, we obtain the critical speed for overturning:

$$V_{кр.пер.} = \sqrt{\frac{B \cdot g \cdot R}{2 \cdot h}} .$$

The critical speed $V_{cr.over}$ for overturning is the speed at which vehicle overturning becomes possible.

3.7.1.3. Critical transverse slope angle of the road for lateral skidding

During straight-line motion of a vehicle on a road with a transverse slope (camber), loss of its transverse stability is caused by the component of the vehicle's weight (Fig. 3.30):

$$P_y = G_a \cdot \sin\beta$$

where β is the transverse slope angle of the road.

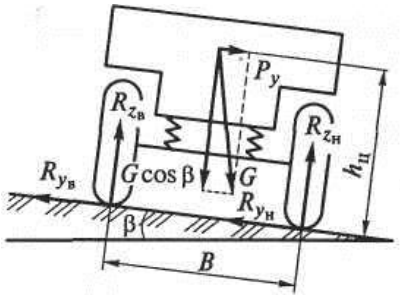

Figure 3.30. Diagram for determining the critical transverse slope angles of the road for lateral skidding and overturning

The wheel-road adhesion force is equal to

$$P_\varphi = \varphi \cdot G_a \cdot \cos\beta$$

Lateral skidding of the vehicle on a camber may begin when the forces R_u and R_ϕ are equal. Substituting the values of the forces, we obtain

$$G_a \cdot \sin\beta = \varphi \cdot G_a \cdot \cos\beta .$$

From this,

$$\beta = arctg\ \varphi .$$

The critical transverse slope angle of the road for lateral skidding is the maximum angle at which straight-line motion of the vehicle on a camber is still possible without lateral wheel skidding. Lateral skidding of the vehicle under these conditions begins with the action of any minimal lateral force.

3.7.1.4. Critical transverse slope angle of the road for overturning

During straight-line motion on a road with a transverse slope (Fig. 3.30), vehicle overturning may begin when the overturning moment created by the lateral force equals the restoring moment caused by the normal component of the vehicle's weight:

$$M_{перек.} = M_{відн.}$$

Substituting the values of the moments into this equation:

$$G_a \cdot \sin\beta \cdot h = G_a \cdot \cos\beta \cdot \frac{B}{2}.$$

From this, the critical transverse slope angle of the road for overturning is equal to

$$\beta = arctg\frac{B}{2 \cdot h}.$$

The critical transverse slope angle of the road for overturning is the maximum angle at which vehicle motion is still possible without overturning. Vehicle overturning in this case can occur under the action of any minimal lateral force on the vehicle. The critical transverse slope angle of the road is 45–50° for passenger cars, 35–40° for trucks, and 30–35° for buses.

3.7.1.5. Transverse stability coefficient

The transverse stability coefficient allows determining which type of transverse stability loss (skidding or overturning) is more likely during operation:

$$\eta_n = \frac{B}{2h}.$$

When comparing the critical speeds of transverse stability under skidding and overturning conditions:

$$V_{кр.к} = V_{кр.пер.} = \sqrt{\varphi \cdot g \cdot R} = \sqrt{\frac{B \cdot g \cdot R}{2 \cdot h}},$$

then

$$\varphi = \frac{B}{2h} = \eta_n.$$

From this, it follows that if the wheel-road adhesion coefficient ϕ\phi is less than the transverse stability coefficient (ϕ<ηn), then during a turn, the likelihood of vehicle skidding will be higher than that of overturning.

If the wheel-road adhesion coefficient is greater than the transverse stability coefficient (ϕ>ηn), vehicle overturning can occur without skidding. This phenomenon is more likely on roads with a high adhesion coefficient.

Let us compare the critical transverse slope angles of the road under skidding and overturning conditions:

$$arctg\varphi = arctg\frac{B}{2h};$$

$$\varphi = \frac{B}{2h} = \eta_n.$$

It also follows that if the wheel-road adhesion coefficient ϕ is less than the transverse stability coefficient (ϕ<ηn), then on a camber, the likelihood of vehicle skidding will be higher than that of overturning.

If the wheel-road adhesion coefficient is greater than the transverse stability coefficient (ϕ>ηn), vehicle overturning can occur without skidding. This phenomenon is also more likely on roads with a high adhesion coefficient.

The values of the transverse stability coefficient for different types of vehicles are as follows: for passenger cars – 0.9–1.2, for trucks – 0.5–0.8, for buses – 0.5–0.65.

he higher the transverse stability coefficient, the greater the vehicle's resistance to lateral overturning. In modern vehicles, wheel skidding occurs first, followed by overturning. For this, the condition ($\phi<\eta_n$) must be met.

Structurally, this can be achieved by increasing the track width and lowering the vehicle's center of mass, which contributes to increasing the transverse stability coefficient η_n.

This, in turn, will enhance vehicle road safety:

$$V_{кр.ковз.} < V_{кр.перек.}$$

$$\beta_{кр.ковз.} < \beta_{кр.перек.}.$$

3.7.1.6. Transverse stability on a curve

In practice, a turn and a transverse road slope often occur simultaneously, creating conditions for the loss of transverse stability.

In Fig. 3.31, two vehicles are shown. Vehicle I is moving with a left turn, and Vehicle II is moving with a right turn.

Let us determine which of them is more stable and safer on the turn. For this, we decompose the lateral force R_u and the weight G into components perpendicular and parallel to the road surface.

In Vehicle II, transverse stability is higher than in Vehicle I because in it the forces Ru′ and G′ combine and increase wheel-road adhesion, while the forces Ru″ and G″ reduce each other, acting in opposite directions.

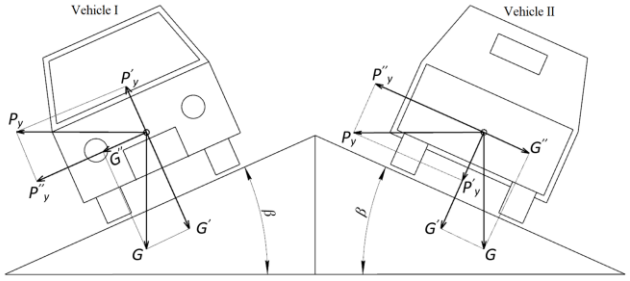

Figure 3.31. Vehicle motion on a curve:
G′, G″— components of the vehicle weight; R_u', R_u''— components of the lateral force

In Vehicle I, the forces R_u' and G′, directed in opposite directions, reduce wheel-road adhesion, while the forces R_u'' and G″, acting in the same direction, reduce transverse stability.

Thus, Vehicle II, moving on a properly banked curve, is more stable and safer on the turn than Vehicle I. For this reason, to ensure the necessary road safety on roads with small curve radii, a banked curve—a single-slope transverse profile—is constructed, directing the road's transverse slope toward the center of the turn. In this case, the vehicle's transverse stability is significantly increased, regardless of its direction of motion.

3.7.1.7. Body roll

When determining transverse stability indicators, it is assumed that the vehicle is a rigid body, with all points moving at the same speed. In reality, the vehicle is a complex system of masses connected by hinges or elastic elements.

Two main groups of masses are distinguished in a vehicle:

– Sprung (body) — their weight is supported by the suspension.

– Unsprung (wheels, axles) — their weight is supported by the tires.

The center of gravity of the sprung masses is located slightly above the vehicle's center of gravity. The mass of the unsprung parts of the front axle is generally less than that of the unsprung parts of the rear axle (driven axle).

Under the action of lateral force, the tires and elastic suspension elements on one side of the vehicle unload, while on the other side they are loaded. As a result, the vehicle body tilts and rolls in the transverse direction.

To reduce body roll, a transverse stability stabilizer is installed, thereby increasing the suspension's angular stiffness. With body roll, the likelihood of vehicle overturning increases.

If the critical speed $V_{roll.p}$ and the critical angle $\beta_{roll.p}$ also consider the roll angle, their values will be 10–15% lower than in calculations without it.

For trucks, transverse stability stabilizers can be installed on both the front and rear axles. When the wheels on one side encounter road irregularities, forces act on the vehicle body, causing transverse oscillations. Increasing the suspension's angular stiffness amplifies these oscillations. Therefore, the stabilizer's stiffness should not be too high. It is selected so that body roll with the stabilizer installed is reduced by 20–40%.

3.7.2. Longitudinal stability of the vehicle

Longitudinal stability is the stability that assesses the vehicle's ability to resist overturning or skidding relative to the transverse axis.

In the event of a loss of longitudinal stability, the vehicle can overturn around the front or rear axle or skid in the longitudinal direction. Fig. 3.32 shows a diagram of a vehicle on an incline.

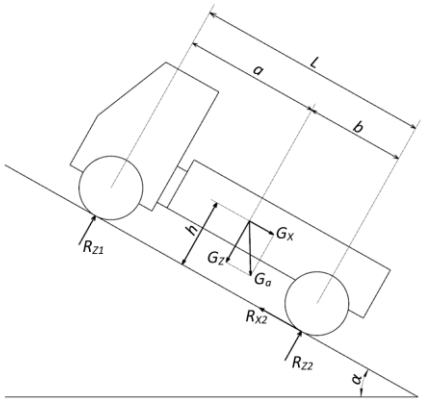

Figure 3.32. Diagram of a vehicle on an incline

The indicators of a vehicle's longitudinal stability are:
– the critical road angle α for overturning
– the critical road angle α for skidding
– the critical speed $V_{roll.l}$ for aerodynamic stability

3.7.3. Influence of lateral forces on a vehicle's transverse stability during wheel skidding

When considering the phenomenon of loss of transverse stability, it was assumed that both axles skid simultaneously in the lateral direction. More often, the wheels of a single axle skid. It is advisable to consider the stability of one axle.

Skidding of the rear axle wheels is called oversteer. For the wheel to roll without skidding, in general, the wheel-road adhesion force R_ϕ must be greater than the geometric sum R_{xy} of the lateral R_y and tangential R_x road reactions (Fig. 3.2).

$$P_\varphi = \varphi \cdot R_z \geq \sqrt{R_x^{\,2} + R_y^{\,2}}.$$

From this, the lateral reaction is:

$$R_y \leq \sqrt{\varphi^2 \cdot R_z^{\,2} - R_x^{\,2}}.$$

Thus, the lateral force R_u that can be applied to the wheel without causing it to skid is greater, the greater the adhesion force $\phi \cdot R_z$ and the smaller the tangential road reaction R_x.

The driven wheel has the greatest transverse stability. Its rolling resistance is significantly less than the wheel-road adhesion force.

Therefore:

$$R_y \le R_z \cdot \sqrt{\varphi^2 - f^2}.$$

When the full adhesion force R_φ is used by the tangential reaction R_x (R_φ=R_x– wheel spin or skid), only a small lateral force is sufficient to cause lateral skidding.

To stop lateral skidding, it is necessary to reduce the tangential reaction R_x on the wheels by releasing the brakes or reducing fuel supply. Vehicles may use systems for automatic maintenance of traction or braking force. For this, the throttle opening angle is automatically reduced, or the pressure of brake fluid or air in the braking mechanisms is decreased. Such measures significantly increase vehicle stability.

3.7.4. Rear axle oversteer

During acceleration and overcoming high resistance, there is a high probability of rear axle wheel skidding (oversteer), because the rear axle experiences a tangential reaction much greater than that on the front axle.
During braking, the reactions of the front and rear wheels are redistributed, which reduces the adhesion of the rear wheels and increases the likelihood of their skidding.

3.7.5. Influence of various factors on vehicle stability

In operation, loss of transverse stability occurs more frequently and is more dangerous than loss of longitudinal stability. Various design and operational factors affect a vehicle's transverse stability.

Body roll

The transverse stability of a vehicle is influenced by tire elasticity and suspension stiffness. During acceleration, braking, and turning, as well as when driving over road irregularities, the vehicle body tilts laterally due to the lateral force P_y. This reduces the vehicle's preliminary stability.

Tire wear

During operation, as the tire tread wears, wheel-road adhesion decreases and the likelihood of vehicle skidding increases. For example, the adhesion coefficient of worn (bald) tires is almost half that of new tires.

Brake mechanism malfunctions

Among many factors that may change during vehicle operation, the technical condition of the brakes has the greatest impact.

Reduced vehicle stability during braking may be caused by uneven distribution of braking forces between wheels due to oil on friction pads, improper adjustment of braking mechanisms, or uneven wear of friction linings. Uneven distribution of braking forces on the front wheels is more dangerous than on the rear wheels.

Road surface condition

A similar phenomenon occurs when the wheels on one side of the vehicle roll over a slippery section of road, while the other side rolls over a section with higher adhesion.

Tire adhesion coefficient

Road surface condition, curve radii, and banking significantly affect a vehicle's transverse stability. When road conditions worsen (rain, snow, ice), wheel-road adhesion decreases significantly, which can lead to vehicle skidding.

The smallest road curve radii are 30 m. Driving on roads with small curve radii creates conditions for loss of transverse stability (skidding). Therefore, to improve vehicle stability on tight curves, banked curves are constructed. Banking increases both vehicle stability and road safety on curves.

Wheel lock during braking

Vehicle stability is significantly affected by wheel lock during braking.

Simultaneous wheel lock can occur on roads with an optimal adhesion coefficient (0.4–0.5).

When braking on roads with lower adhesion, the front wheels lock first, which may lead to loss of vehicle control.

When braking on roads with higher adhesion, the rear wheels lock first, which may lead to vehicle oversteer.

Vehicle center of gravity and track width

The height of the vehicle's center of gravity and track width significantly affect its transverse stability. A high center of gravity may lead to vehicle overturning under lateral force. This phenomenon is most likely when driving on tight curves without banking.

3.8 Controllability

3.8.1. Indicators of vehicle controllability

The trajectory of a vehicle's motion can be considered as curvilinear with a continuous change of the turning radius. For straight-line motion, the radius can be regarded as approaching infinity.

Controllability is the set of properties that ensure a vehicle, under specific road and weather conditions, maintains the required direction of motion or changes it according to the action of the steering control.

Vehicle controllability is influenced by the design of the steering mechanism and steering linkage, the location of the center of gravity, the suspension and tire design (lateral elasticity of the tires), the type of steered wheels (driven or non-driven), and technical condition.

Research and operational experience show that good vehicle controllability is possible if several conditions are met:

–the steered wheels of the vehicle roll without lateral slip;
–the steering linkage ensures the correct relationship of the steering wheel angles;
–the vehicle layout, suspension, and tires provide the optimal ratio between the slip angles of the front and rear axles;
–the steering system is designed in such a way that the driver can feel the forces acting from the road on the steered wheels.
–Accordingly, the evaluation indicators of controllability are:
–critical speed under controllability conditions;
–vehicle cornering ability;
–ratio of steering wheel angles;
–critical speed under slip conditions;
–stabilization of steered wheels.

Appropriate methods for determining the values of controllability indicators have been proposed for evaluation.

3.8.2. Wheel slip angle

A vehicle wheel has radial, tangential, and lateral elasticity. Vehicle controllability and stability largely depend on the lateral elasticity of the wheel.

If a lateral force acts on a rigid rolling wheel, its trajectory will remain in the longitudinal plane of the wheel until the lateral force P_y becomes greater than the wheel-road adhesion force P_φ. After that, the wheel begins to slip laterally. When a lateral force P_y acts on an elastic wheel, the rolling trajectory of the wheel deviates from the plane of the wheel by an angle called the lateral slip angle δ (Fig. 3.33).

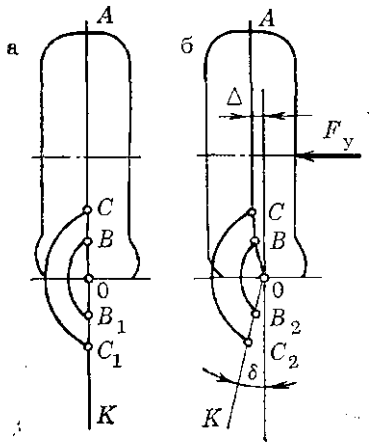

Figure 3.33. Diagram of rolling of an elastic wheel with slip angle

When the slip angle of a vehicle wheel occurs only due to the elastic deformation of the tire elements, the concept of the wheel slip resistance coefficient k_δ can be introduced:

$$k_\delta = \frac{P_y}{\delta}$$

The slip resistance coefficient depends on a number of factors, the main ones being: the dimensions and design of the wheel, the air pressure in the tire, the type and condition of the road surface, the normal load on the wheel, and its circumferential force.

The value of coefficient k_δ for passenger car tires is 15...40 kN/rad, and for truck and bus tires – 60...120 kN/rad.

During tire rolling with lateral slip, in addition to the radial deformation of the tire elements in contact with the road, their deformation in the lateral direction also occurs. As a result, the rolling resistance of the tire increases under lateral slip.

Vehicle stability and controllability largely depend on the slip angles of the axles, which are determined by tire slip and suspension kinematics. Usually, axle slip angles are determined experimentally when the vehicle moves at different speeds along a circle with the steering wheel fixed.

3.8.3. Vehicle turning with different drive types

When a vehicle moves with front steered wheels driven by the rear drive wheels, a force P_k acts from the rear drive wheels (Fig. 3.34, a), which is transmitted through the frame to the front axle, where a reaction R_{x1} arises. The forces P_k and R_{x1} are equal to each other and directed along the longitudinal axis of the vehicle. The reaction R_{x1} can be decomposed into components P_f and P_{y1}, which are directed parallel and perpendicular to the plane of the wheels. The force P_{y1} creates a turning the turning moment of the vehicle relative to point D

$$M_{пов} = R_{y1} \cdot L \cdot \cos\theta,$$

and the force P_f creates the resisting moment of the turn

$$M_{опору} = R_{f1} \cdot L \cdot \sin\theta.$$

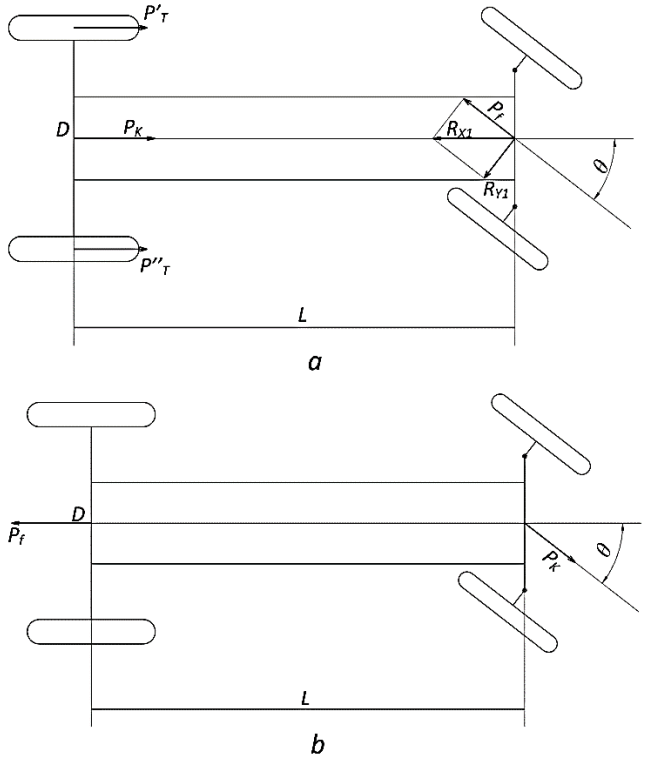

Figure 3.34. Diagram of vehicle turning: a – rear-wheel drive; b – front-wheel drive

Since $P_f = f \cdot G_1$ and $P_{y1} = \varphi \cdot G_1$, then in a critical situation:

$$M_{пов} \geq M_{опору}$$

$$\varphi \cdot G_1 \cdot L \cdot \cos\theta \geq f \cdot G_1 \cdot L \cdot \sin\theta.$$

$$\varphi \geq f \cdot tg\theta.$$

It follows that the vehicle will turn if the coefficient of adhesion is greater than the product of the rolling resistance coefficient of the steered wheels and the tangent of the steering angle θ. If this condition is not met, the steered wheels will slide in a skid, and the vehicle will not turn. The maximum steering angles of the steered wheels do not exceed 35–45°. On a dry and hard road, the coefficient of adhesion greatly exceeds the rolling resistance coefficient, therefore controllability is always ensured. On soft and slippery surfaces, the values of φ and f become closer, and thus vehicle controllability deteriorates.

When a front-wheel-drive vehicle turns, the turning moment relative to point D is created not by the lateral reaction but by the traction force P_k (Fig. 3.34, b).

$$M_{пов} = P_к \cdot L \cdot \sin\theta.$$

Therefore, in vehicles with front driven and steered wheels, a turning moment is always created if the drive wheels generate the traction force Pk. This explains why front-wheel-drive vehicles have better controllability, especially when driving on slippery roads where the lateral road reactions are limited by adhesion.

3.8.4. Vehicle turning kinematics

The ability of a vehicle to make turns is characterized by a property called cornering ability.

In Fig. 3.35, a diagram of vehicle turning with wheel rolling without lateral slip is shown. For this, it is necessary that their axes intersect at one point, called the center of the turn (point O). Vehicle motion in a turn is characterized by the radii of the trajectories

The steering of the wheels is carried out by means of a steering trapezoid, which allows the wheels to turn at different angles so that all radii converge at one point and the wheels roll without slipping.

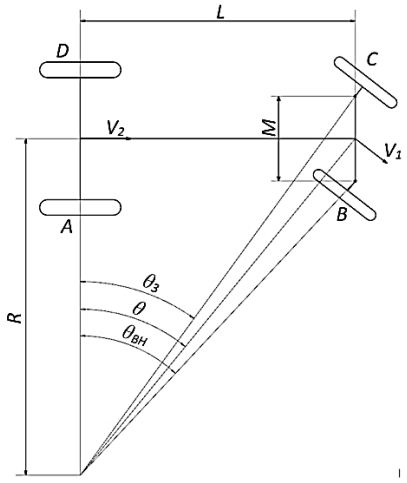

Figure 3.35. Diagram of vehicle turning during wheel rolling without lateral slip

3.8.5. Critical speed under vehicle controllability conditions

In Fig. 3.36, a vehicle is shown during its motion in a turn. The steered wheels of the vehicle are turned relative to the neutral position, which they occupy during straight-line motion, at an average angle θ. A force P is applied to the front axle, the component P_{x1} of which, parallel to the steered wheels, during uniform motion is equal to the rolling resistance force:

$$P_{x1} = P_f = f \cdot G_1.$$

The component P_{y1} is perpendicular to the wheels and equals:

$$P_{y1} = P_{x1} \cdot tg\theta = f \cdot G_1 \cdot tg\theta.$$

The front axle is also subjected to the centrifugal force:

$$P_{centr} = \frac{G_1}{g} \cdot \frac{V_1^2}{R_1}$$

$$P_{відц} = \frac{G_1}{g} \cdot \frac{V_1^2}{R_1}.$$

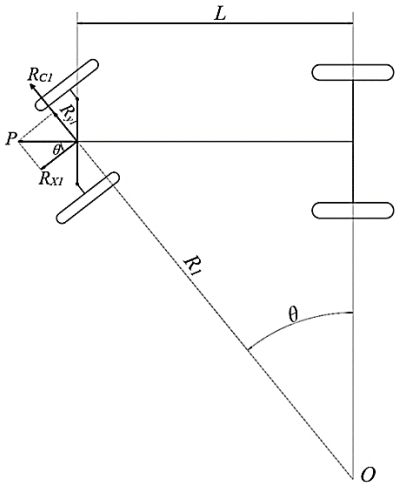

Figure 3.36. Diagram of forces during vehicle motion in a turn

Since $V_1 = V \cdot \frac{R_1}{R}$, $R_1 = \frac{R}{\cos\theta}$,

then

$$P_{відц} = \frac{G_1}{g} \cdot \frac{V^2}{R \cdot \cos\theta} = \frac{G_1}{g} \cdot \frac{V^2 \cdot tg\,\theta}{L \cdot \cos\theta}.$$

The forces P_{y1} and P_{c1} tend to cause lateral slip of the steered wheels. For the wheels to roll without slipping, the following condition must be satisfied

$$R_{y1} = P_{y1} + P_{відц1} \le \sqrt{R_{z1}^2 \cdot \varphi^2 - R_{x1}^2} \approx G_1 \cdot \sqrt{\varphi^2 - f^2}$$

The centrifugal force P_{cent} is directly proportional to the square of the speed, and therefore wheel slip is most likely when the vehicle is moving at high speed.

The critical speed under controllability conditions Vкер is called the speed at which the vehicle can move in a turn without lateral slip of the steered wheels. This speed is obtained after simplifying expressions:

$$V_{кер} = \sqrt{\left(\frac{\sqrt{\varphi^2 - f^2}}{tg\,\theta} - f \right) \cdot g \cdot L \cdot \cos\theta}.$$

If the vehicle speed exceeds $V_{кер}$, the steered wheels will slip laterally during the turn, and turning the wheels will not change the vehicle's direction of motion.

Since on roads with hard surfaces the coefficient of adhesion φ is significantly greater than the rolling resistance coefficient f, the vehicle maintains controllability even when moving along tight-radius curves.

When driving on slippery roads, as well as on sand or snow, the values of the coefficients φ and f are not very different. This leads to a reduction in the critical speed, and under particularly difficult conditions, it can drop to zero.

In the case of complete slipping of the front wheels, for example, due to wheel lock-up during braking, the lateral reaction from the road cannot occur. In this case, turning the front wheels does not change their direction of motion, and the vehicle loses controllability, which is extremely dangerous.

3.8.6. Ratio of steered wheel angles

The kinematics of vehicle turning can be analyzed using the diagram of a vehicle with rigid wheels (Fig. 9.5). During rolling of wheels without slip, the instantaneous center of rotation O is located at the intersection of the perpendiculars to the wheel velocity vectors.

To ensure an approximate relationship between the steering angles of the wheels, they are connected by a steering trapezoid.

The turning radius can be determined from the geometric relationship

$$R = \frac{L}{tg\ \theta}.$$

An elastic tire cannot absorb a transverse force without lateral deflection. When a vehicle is cornering at high speed, inertial forces arise, as a result of which the vehicle axles begin to move with slip angle, which can significantly change the direction of the vehicle. In this case, the wheels will roll not in the plane of symmetry, but at a certain angle (Fig. 3.37).

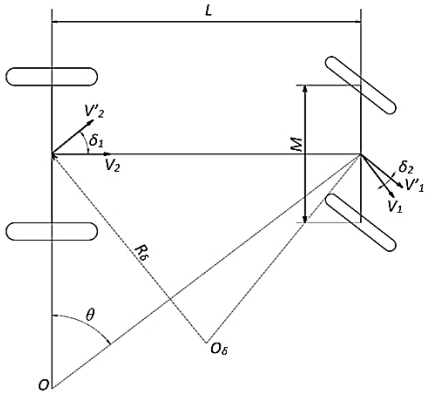

Figure 3.37. Diagram of vehicle turning with wheel slip

The velocity vector of the rear axle forms an angle δ_2, and the velocity vector of the front axle forms an angle $(\theta - \delta_1)$. Accordingly, the position of the instantaneous center of rotation R_δ of a vehicle with elastic tires also changes.

From geometric relationships

$$R_\delta = \frac{L}{tg(\theta - \delta_1) + tg\ \delta_2}.$$

At small turning angles:

$$R_\delta \approx \frac{L}{\theta + \delta_2 - \delta_1}.$$

3.8.7. Vehicle cornering ability

The property of a vehicle with elastic tires to deviate as a result of the wheel slip angles from the direction of motion corresponding to the wheel positions is called cornering ability.

Cornering ability depends on the difference in the slip angles of the wheels of the axles δ_1 - δ_2.

Neutral cornering ability

When the slip angles of the front and rear axle wheels are equal ($\delta_1 = \delta_2$), the cornering ability is called neutral (Fig. 3.38).

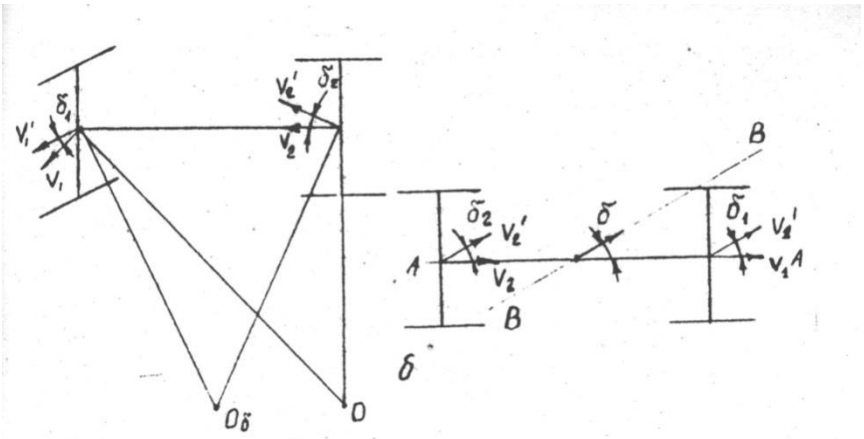

Figure 3.38. Diagram of vehicle motion with neutral cornering ability

According to formula, if $\delta_1 = \delta_2$, then $R = R_\delta$. However, the trajectory of a vehicle with rigid tires in a turn does not coincide with the trajectory of a vehicle that has neutral cornering ability, since the centers of rotation in these cases occupy different positions.

The trajectories also differ in straight-line motion. A vehicle with neutral cornering ability, due to slip, also moves straight, but at an angle δ to the previous direction of motion. That is, the movement will follow line *B–B*. To ensure movement along line *A–A*, the driver must turn the vehicle in the opposite direction so that its longitudinal axis forms an angle δ with trajectory *A–A*.

Understeer

If $\delta_1 > \delta_2$, then $R < R_\delta$, and for a vehicle with elastic tires to move along a curve of the same radius, the front wheels must be turned at a greater angle than for a vehicle with rigid tires (Fig. 3.39). Such a vehicle has understeer.

During straight-line motion under the action of a disturbing lateral force P (wind force, side impacts), the vehicle begins to rotate around the instantaneous center of rotation O_δ (even with the wheels in a straight position). As a result of this rotation, a centrifugal force P_{vc} arises, the lateral component of which $P_{vc\ y}$ is directed opposite to force P. Force $P_{vc\ y}$ compensates the disturbing force P and the slip decreases. Thus, a vehicle with understeer stably maintains a straight-line direction of motion.

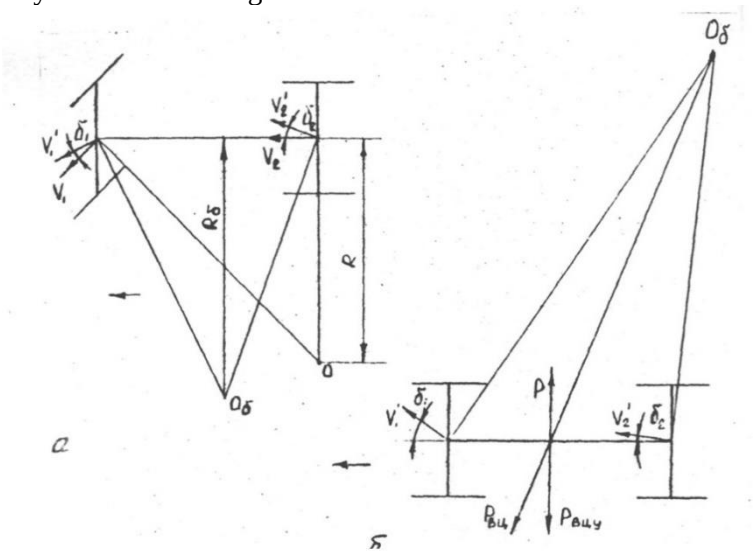

Figure 3.39. Diagram of vehicle motion with understeer

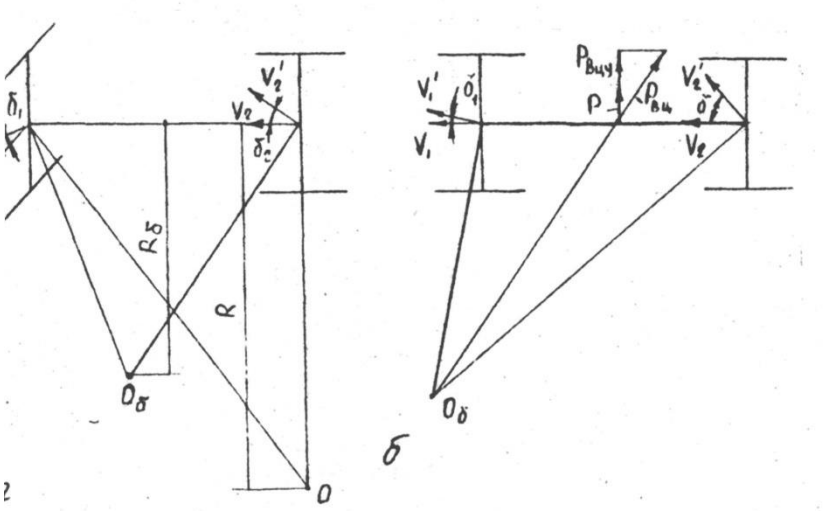

Figure 3.40. Diagram of vehicle motion with oversteer

Oversteer

If $\delta_1 < \delta_2$, then $R > R_\delta$, and for a vehicle with elastic tires to move along a curve of the same radius, the front wheels must be turned at a smaller angle than for a vehicle with rigid tires (Fig. 3.40). Such a vehicle has oversteer.

If a vehicle with oversteer is affected by a lateral force P, it will move along a curvilinear path relative to the instantaneous center of rotation O_δ. The lateral component P_{vc} y of the centrifugal force has the same direction as force P. The force $P_{vc\ y}$ and the disturbing force P add up. As a result, the slip increases, and the instantaneous turning radius decreases, increasing the centrifugal force P_{vc} and its component $P_{vc\ y}$. In this case, if the driver does not turn the steered wheels in the required direction, the centrifugal force may increase so much that the vehicle loses stability. Thus, a vehicle with oversteer has lower stability and worse directional retention than a vehicle with understeer.

A vehicle with oversteer may lose not only stability but also controllability. This can be seen from the formula:

$$\theta = \frac{L}{R_\delta} + (\delta_1 - \delta_2).$$

3.9 Critical speed of a vehicle under the condition of elastic tire angle slip

The angles δ_1 and δ_2 are proportional to the lateral forces $P_{vc\ y1}$ and $P_{vc\ y2}$ (the lateral components of the centrifugal forces);

$$\delta_1 = \frac{P_{вц\ y1}}{k_{\delta 1}} = \frac{G_1 \cdot V^2}{g \cdot R_\delta k_{\delta 1}},$$

$$\delta_2 = \frac{P_{вц\ y2}}{k_{\delta 2}} = \frac{G_2 \cdot V^2}{g \cdot R_\delta k_{\delta 2}},$$

where $k_{\delta 1}$, $k_{\delta 2}$ are the resistance coefficients to tire slip of the front and rear wheels;

G_1, G_2 are the weight forces acting on the front and rear axles.

At a certain speed, the difference (δ_1 - δ_2) becomes such that it equals the ratio L / R_δ. This speed is called the critical speed from the condition of slip V_δ.

At this speed, the vehicle will begin to move along a curvilinear path despite the fact that the steered wheels are in the neutral position.

Since at the initial moment the vehicle was moving in a straight line and the steering angle of the front wheels θ was equal to zero, to determine the critical speeds from the condition of slip V_δ we write the formula:

$$\delta_2 - \delta_1 = \frac{L}{R_\delta} = \left(\frac{G_2}{g \cdot k_{\delta 2}} - \frac{G_1}{g \cdot k_{\delta 1}} \right) \cdot \frac{V_\delta^2}{R_\delta};$$

$$V_\delta = \sqrt{\frac{gL}{\frac{G_2}{k_{\delta 2}} - \frac{G_1}{k_{\delta 1}}}}.$$

For a vehicle with understeer, the critical speed does not exist, because when $\delta_1 > \delta_2$ the expression under the square root is negative and Vδ has no meaning.

With neutral cornering ability $\delta_1 = \delta_2$, the critical speed is infinitely large.

With oversteer $\delta_1 < \delta_2$, the vehicle has a critical speed V_δ. At this speed, for the vehicle to move along a curve, the driver must set the steered wheels to the neutral position. At a speed higher than V_δ, the angle θ becomes negative. Therefore, to turn left, the steered wheels must be turned to the right.

To achieve the desired cornering ability of the vehicle, it is necessary to slightly reduce the air pressure in the front tires, thereby decreasing their resistance coefficient to slip.

3.9.1 Influence of various factors on vehicle cornering ability

Various design factors significantly affect the cornering ability of a vehicle. The main ones are the air pressure in the front and rear tires, the position of the vehicle's center of gravity, the type and design of the front and rear suspension, as well as the vehicle layout with respect to the drive of the driven wheels.

Tire pressure

The air pressure in the tires affects the resistance to slip of the front and rear wheels and the magnitude of their slip angles. When air pressure decreases, the resistance of the wheels to slip decreases (k_δ decreases), the wheel slip angle increases, and vice versa. For example, reducing the air pressure in the front tires compared to the rear leads to greater slip of the front wheels ($\delta_1 > \delta_2$). Thus, to achieve understeer in a vehicle, the air pressure in the front tires should be lower than in the rear tires.

Center of gravity position

The location of the center of gravity along the vehicle's wheelbase determines the load on the wheels.

Therefore, to achieve understeer, the center of gravity should be positioned closer to the front wheels, which will promote greater front-wheel slip compared to the rear wheels ($\delta_1 > \delta_2$).

Suspension design

The type and design of the front and rear suspension affect the tilt of the wheels under lateral forces (centrifugal, wind force, etc.).

Thus, to achieve understeer in passenger cars, it is advisable to use an independent front suspension on longitudinal or double transverse arms and a dependent rear suspension. This is confirmed by operational experience of passenger cars moving at high speeds on curves, where the centrifugal force reaches significant values.

Vehicle layout with respect to driven wheels

Passenger cars with front steered and driven wheels (front-wheel drive) exhibit understeer regardless of their load, i.e., the number of passengers in the cabin.

From the above, it follows that to achieve understeer in trucks, the air pressure in the front tires should be lower than in the rear tires, and the center of gravity should be closer to the front wheels.

To achieve understeer in passenger cars, they should have different types of suspension (independent front and dependent rear) or be front-wheel drive (Fig. 9.9).

3.9.2 Stabilization of steered wheels

Steered wheel stabilization is the property of these wheels to resist deviation from the position corresponding to straight-line motion (neutral position) and automatically return to it after the external forces cease.

Driving a vehicle with poor stabilization is difficult because straight-line motion is unstable, the vehicle constantly deviates from the straight path, and the driver must continuously correct the direction with the steering wheel.

To improve stabilization, the transverse β tilt of the steered wheel axis (weight, stabilizing moment) (Fig. 3.41, a) and the longitudinal α tilt of the steered wheel axis (speed-dependent stabilizing moment) (Fig. 3.41, b) are used.

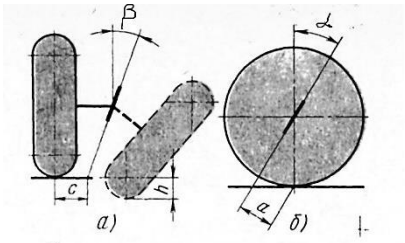

Figure 3.41. Stabilization of steered wheels

The stabilizing moment with transverse tilt of the steering axis is influenced by the vehicle weight and the steering angle. The transverse tilt angle β of the steering axis is 6–10°.

With transverse tilt β, the rolling lever arm s decreases, which reduces the turning resistance forces and therefore facilitates steering. In addition, the moment that tends to turn the wheel under increased resistance (obstacle, tire puncture, operation of the brake system's backup circuit in an X-shaped scheme) decreases.

With longitudinal tilt of the steering axis, the point, where the steering axis intersects the road, is located in front of the wheel-road contact patch (Fig. 3.41, b). When the vehicle turns, lateral forces act on the wheels, which are reactions from the centrifugal force and return the steered wheels to the neutral position.

The stabilizing moment is proportional to the square of the speed and is called the speed-dependent stabilizing moment. The longitudinal tilt angle α is 1–4°.

The greatest influence on the total stabilizing moment is exerted by the longitudinal tilt angle of the steering axis and the lateral elasticity of the tire.

3.10. Maneuverability

Vehicles must have good maneuverability. It is necessary when there is a significant change in direction in urban conditions, where 90° turns are frequently required, during reversing, or for complete U-turns. High maneuverability is also necessary during loading and unloading of vehicles in small areas.

Maneuverability characterizes the ease of use of the vehicle and the ease of control when performing turns and U-turns in confined conditions, as well as the vehicle's ability to pass on unpaved roads with sharp turns, over rough terrain, and through forests. Maneuverability affects the required size of areas at loading and unloading sites, the time needed for these operations, and the necessary width of passages in garages, parking lots, and service zones.

3.10.1. Indicators of maneuverability

The main indicators of vehicle maneuverability (Fig. 3.42) are the minimum turning radius R_{min}, the inner $R_в$ and outer $R_н$ overall turning radii, the minimum turning radius of the inner rear wheel $R_{вк}$, the turning width $b_п$ along the wheel track, and the turning width $b_к$ of the vehicle (corridor).

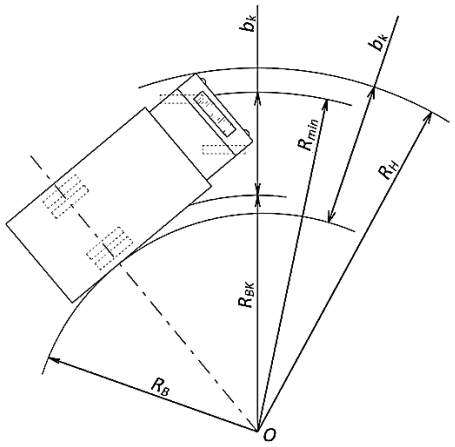

Figure 3.42. Vehicle maneuverability indicators: O — center of the turn

The minimum turning radius of a vehicle is the distance from the center of the turn to the track axis of the front outer steered wheel at its maximum steering angle. The minimum turning radius is specified in the vehicle's technical specifications. It can be calculated using the formula:

$$R_{\min} = \frac{L}{\sin \theta_{\max}},$$

where L — wheelbase of the vehicle;

θ_{max}— maximum steering angle of the outer wheel.

The inner and outer overall turning radii ($R_в$ and $R_н$) are the distances from the center of the turn to the nearest and farthest points of the vehicle at the maximum steering angle of the wheels.

The turning width along the wheel track is the difference between the minimum turning radii of the front outer wheel and the rear inner wheel:

$$b_к = R_{\min} - R_{вк}.$$

The turning width along the vehicle's wheel track determines the minimum required width of the hard-surfaced roadway.

The vehicle's turning width (corridor) is the difference between the outer and inner overall turning radii of the vehicle:

$$b_к = R_{зовн} - R_{вн}.$$

The turning width of the corridor determines the minimum width of the roadway or lane required for sharp turns, as well as the possibility of movement in passages of given dimensions and shape.

3.10.2 Influence of various factors on vehicle maneuverability

Maneuverability significantly depends on the vehicle design, the steering angles of the wheels, wheelbase, overhang dimensions, the design of coupling devices for road trains, the overall dimensions of trailers and semi-trailers, as well as the force applied by the driver to the steering wheel during vehicle maneuvering.

Single vehicles are more maneuverable than vehicles with trailers or tractor-semitrailer combinations. When a tractor vehicle moves with a trailer or semi-trailer (Fig. 10.3), maneuverability decreases because, during turns, the trailer or semi-trailer shifts toward the center of the turn. As a result, the lane width required for the road train is greater than that of a single vehicle. Moreover, the lane width of the road train increases with the wheelbase and width of the trailer or semi-trailer, as well as the number of trailers. Additionally, transverse oscillations of the trailer occur during turning, which may lead to instability of the road train.

Reduced maneuverability of a vehicle also diminishes its passability. For instance, the lane width (vehicle turning width), which characterizes its maneuverability in small areas (quarries, construction sites, warehouses, etc.), also determines the vehicle's passability in the horizontal plane.

3.11 Passability

Passability is an operational characteristic of great importance for any vehicles, especially those used in agriculture, forestry, construction, quarries, and off-road conditions. Passability in such operating conditions determines the average travel speed and affects the vehicle's productivity. Vehicle passability is evaluated by overall dimensions, traction, and support-adhesion parameters, as well as by a comprehensive passability factor.

3.11.1 Dimensional parameters of passability

Dimensional parameters characterize the vehicle's ability to traverse road irregularities and fit within road clearances.

The main dimensional parameters of vehicle passability (Figs. 3.43) are ground clearance h, front α_1 and rear α_2 overhang angles, longitudinal ρ_1 and transverse ρ_2 passability radii, outer $R_з$ and inner $R_в$ overall turning radii, turning width $B_к$, and flexibility angles in the vertical $\beta_в$ and horizontal αr planes.

Ground clearance is the distance between the lowest point of the vehicle and the road. It characterizes the vehicle's ability to move without striking obstacles (stones, stumps, bumps). Typically, ground clearance is measured under the differential casing of the driven axle. Its value depends on the type of vehicle and operating conditions. For trucks, ground clearance is 245–290 mm, and for off-road vehicles, it is 315–400 mm. Increasing ground clearance enhances passability, which can be achieved by enlarging wheel diameter and reducing the size of the differential housing (e.g., split differential). However, increasing ground clearance raises the vehicle's center of gravity, which can reduce its stability.

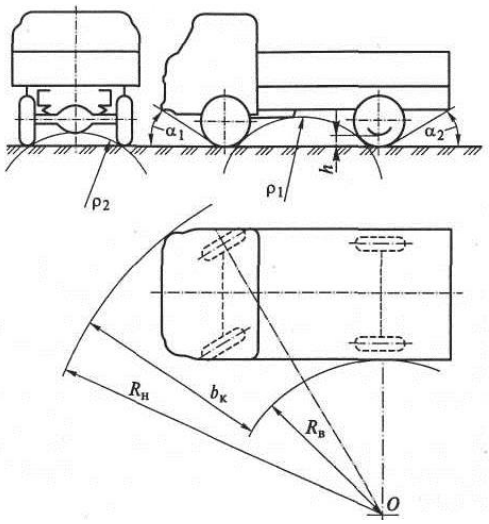

Figure 3.43. Dimensional parameters of vehicle passability: O — center of the turn

The front and rear overhang angles are the angles formed between the road plane and the planes tangent to the front and rear wheels and to the lowest protruding points of the vehicle's front and rear parts. They characterize the vehicle's ability to pass over uneven roads when climbing onto or descending from obstacles (driving over a bump, crossing a ditch, hole, or trench, etc.). The greater the overhang angles, the steeper the road irregularities the vehicle can overcome.

For trucks, α_1 = 25–42° and α_2 = 18–38°, and for off-road vehicles, α_1 = 35–55° and α_2 = 32–42°.

The longitudinal and transverse passability radii are the radii of circles tangent to the wheels and the vehicle's lowest points in the longitudinal and transverse planes. These radii define the contours of obstacles over which the vehicle can pass without contact. The smaller the radii, the better the vehicle's passability. For example, the longitudinal passability radius for standard trucks is 2.7–5.5 m, and for off-road vehicles, it is 2–3.5 m.

The inner and outer overall turning radii are the distances from the turn center to the nearest and farthest points of the vehicle at the maximum steering angle of the wheels. The vehicle's turning width is the difference between its outer and inner turning radii.

Turning radii and turning width also characterize the vehicle's maneuverability — the ability to turn within a minimal area. Maneuverability of road trains decreases as the number of trailer units increases.

3.11.2 Traction and support-adhesion parameters of passability

These parameters characterize the vehicle's passability on soft and hard slippery roads, as well as on inclines.

The main traction and support-adhesion parameters of passability are specific power, dynamic traction factor D, wheel-specific pressure on the road, and the coefficient of wheel-road adhesion. These passability parameters depend on the type of vehicle and its operating conditions.

The vehicle's specific power, kW/t, is the ratio of the engine's maximum power to the vehicle's total mass:

$$N_{num} = \frac{N_{\max}}{m_a}.$$

The higher the specific power, the greater the vehicle's passability. For example, for trucks with limited off-road capability, specific power is 5–12 kW/t, while for road trains it should be at least 5–15 kW/t.

The dynamic traction factor characterizes the vehicle's traction properties when overcoming difficult road sections with high resistance. Therefore, a vehicle operating under harsh road conditions must have a high dynamic traction factor. The higher the dynamic factor, the lower the likelihood of losing passability due to insufficient traction properties. However, the value of the dynamic traction factor is limited by the wheel-road adhesion. To achieve the maximum dynamic traction factor without wheel slip, it is necessary to increase wheel-road adhesion and the adhesive weight of the vehicle (load on the drive wheels).

Increasing wheel-road adhesion can be achieved by selecting a specific tire type and tread pattern, while increasing adhesive weight can be done by increasing the number of drive wheels and shifting the vehicle's center of gravity toward the drive axle.

Maximum values of the dynamic traction factor are 0.25–0.35 for standard vehicles and 0.6–0.8 for off-road vehicles.

To improve vehicle passability, it is necessary to increase the maximum dynamic traction factor. This can be achieved by using more powerful engines, installing hydraulic transmissions, selecting transmission gear ratios (through a reduction gear in the transfer case), or increasing the number of drive wheels.

The specific pressure on the supporting surface characterizes the vehicle's passability on soft roads and can be expressed as:

$$p_{num} = \frac{G_к}{F_к}$$

where G_K is the load on the wheel and F_K is the contact area of the wheel with the road.

To improve passability on soft roads, it is necessary to reduce the wheel pressure on the road. This can be achieved by lowering the tire pressure, increasing tire size, the number of axles and wheels, as well as using specialized tires. Using specialized tires reduces the specific wheel pressure on the road by increasing the contact area with the supporting surface (Fig. 3.44). For example, compared to standard tires, the contact area of wide-profile tires is 20–40% larger, arched tires — 1.5–2 times larger, and pneumatic rollers — 2.5–3 times larger, bringing the passability of vehicles equipped with pneumatic rollers close to that of tracked vehicles.

The specific wheel pressure on the road depends on the type of vehicle and operating conditions. For instance, on asphalt concrete roads, the specific pressure is 0.18–0.55 MPa for standard trucks and 0.1–0.4 MPa for off-road trucks.

The coefficient of adhesion characterizes the vehicle's passability on wet soil and slippery roads. Increasing the adhesion coefficient improves vehicle passability on such surfaces.

The adhesion coefficient is significantly influenced by the tire tread pattern and its saturation. The tread saturation coefficient is defined as the proportion of the load borne by the ground-engaging elements and is expressed as a percentage.

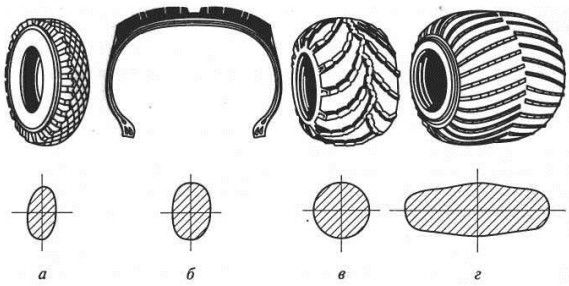

Figure 3.44. Tires and tire contact areas with the road: a — toroidal; b — wide-profile; c — arched; d — pneumatic roller

In off-road conditions, tires with large, widely spaced lugs are used, with a tread saturation coefficient of 15–25%. Such treads resist clogging with mud or snow.

On sandy soil, tires with low-profile lugs and small spacing between them are preferred, with a tread saturation coefficient of 80–90%.

For driving on icy or slippery roads, winter-pattern tires are used. As a temporary measure to improve wheel-road adhesion, various types of anti-slip chains can be applied.

3.11.3 Influence of the differential on vehicle passability

Vehicle passability depends on the drivetrain layout and type, which determine the magnitude, direction, and smoothness of torque transmission from the engine to the driving wheels. High- and off-road vehicles usually have all wheels driven. Inter-wheel and inter-axle differentials are typically used in the drive to the wheels.

The presence of a conventional differential can reduce passability because the maximum tractive force developed by the wheels of an axle is limited by the wheel with the lowest adhesion on the surface. To improve off-road performance, self-locking or limited-slip differentials (cam-type, worm-type) are used.

Modern vehicles can also improve passability with TCS (Traction Control Systems), which brake a slipping wheel via the differential and transfer torque from the slipping wheel to the wheel with better traction.

3.11.4 Circulation of parasitic power

When a four-wheel-drive (4x4) vehicle moves with both driving axles engaged, a phenomenon called power circulation occurs.

The essence of this phenomenon is as follows: on a hard surface, the driving wheels are locked through the transfer case and rotate at the same angular speed.

However, because the vehicle's trajectory is a curve with constantly changing radius, and the road surface is not perfectly smooth, the front and rear axles travel slightly different distances. This causes torsion in the drivetrain components (Fig. 3.45).

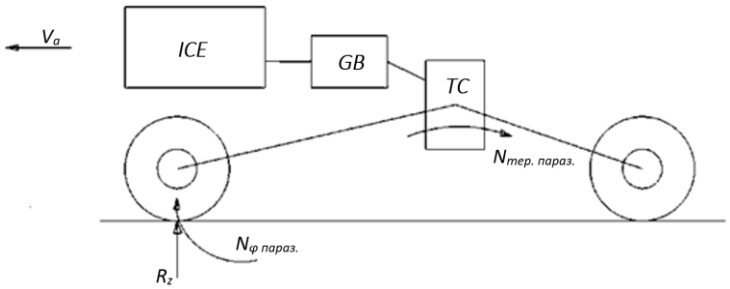

Figure 3.45. Power circulation diagram of an all-wheel-drive vehicle (4x4)

Power circulation occurs in a loop – rear wheels, road surface, front wheels, front axle final drive, front axle driveshaft, transfer case, rear axle driveshaft, rear axle final drive.

As a result, torsional moments arise in the mentioned transmission elements, which can equal the maximum tractive moments. Since wheel slip occurs, the loads do not exceed the maximum permissible torques.

The maximum loads during power circulation are limited by the wheel-road adhesion force. At the same time, power losses occur due to wheel slippage and transmission losses from friction caused by the flow of parasitic power along the indicated loop.

The power required for wheel slip is equal to

$$N_{\varphi\ параз} = R_{z\,\min} \cdot \varphi \cdot \Delta V_{1-2}\ ,$$

where $R_{z\,min}$ - the weight of the lighter part of the vehicle (front or rear);

φ – coefficient of wheel-road adhesion

ΔV_{1-2} – relative wheel slip speed (≈(0.02…0.05) Va).

The power expended on internal friction in the transmission is limited by the wheel-road adhesion.

Therefore

$$N_{тер.\ параз.} = R_{z\,\min} \cdot \varphi \cdot V_a \cdot (1 - \eta_{тр.параз.})\ ,$$

where V_a - vehicle speed;

$\eta_{_tr.\ paras.}$ – efficiency of the part of the transmission through which parasitic power circulates ($\eta_{_tr.\ paras.}$ = 0.80–0.90).

Since on a dry asphalt surface the adhesion coefficient φ = 0.7, the sum of $N_{\varphi\ paras.}$ and $N_{_fr.\ paras.}$ can reach 50% of the engine power. This leads to increased fuel consumption, tire wear, and additional transmission load.

To prevent this negative effect, on an improved road it is necessary to disconnect one of the driving axles or install an inter-axle differential in the transfer case.

3.11.5 Influence of various factors on vehicle off-road capability

The off-road capability of a vehicle is influenced by the following design and operational factors.

Wheel type

A driving wheel overcomes a vertical obstacle better than a driven wheel. This happens because the driving wheel tends to overcome the vertical obstacle, while the driven wheel only resists it.

Research has shown that for a front driven wheel the height of the vertical obstacle overcome is h = 2/3 r, while for a driving wheel the height of the obstacle overcome is $h_{obst} = r_k$.

Wheel track

The ratio between the front and rear wheel tracks of a vehicle (Fig. 3.46) is important when driving on soft soils. A mismatch between the front and rear wheel tracks increases rolling resistance. When the front and rear wheel tracks coincide, off-road capability improves because the front wheels create a track in the soil, and the rear wheels then move along the formed track.

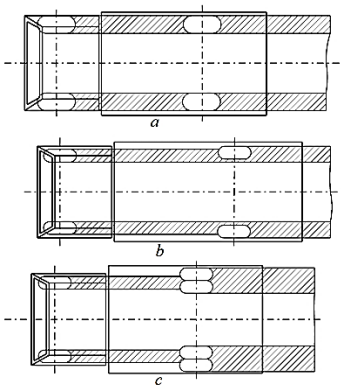

Figure 3.46. Tracks of the front and rear wheels of a vehicle:
a — coinciding; b — non-coinciding; c — with paired rear wheels

Usually, the tracks of the front and rear wheels do not coincide in vehicles with single front and paired rear wheels. Track divergence is also possible in vehicles with all single wheels. For such vehicles, the difference in the width of the front and rear wheel tracks should not exceed 25–30% of the tire width; otherwise, off-road capability will significantly deteriorate.

Wheel suspension type

When driving on rough terrain, vehicles with wheel formulas 6x4 and 6x6 require a balance or independent suspension to prevent wheel lift from the ground. With such suspensions, the wheels better adapt to surface irregularities, and vehicle off-road capability improves.

Hydraulic transmission and transfer case

The use of hydraulic transmissions and transfer cases with reduction gears significantly improves vehicle off-road capability, especially on soft and wet soils. Their use allows for minimal driving speed (0.5–1.5 km/h) and smooth speed variation. This ensures continuous movement under difficult road conditions, which is very important because the vehicle often stops during gear changes.

Differential type

A bevel symmetric differential reduces vehicle off-road capability because it evenly distributes torque between the driving wheels. The tractive force on them is determined by the wheel with less adhesion.

Viscous coupling, worm and cam differentials increase vehicle off-road capability. They are limited-slip differentials. When it used, the total tractive force on the driving wheels increases by 10–25%.

3.12 Vehicles Suspension

Ride comfort is the vehicle's ability to move on roads of any quality at the highest possible speed with minimal body oscillations.

The intensity of mass oscillations of a vehicle when moving on an uneven road depends on the vehicle's layout characteristics, suspensions parameters, and tires.

A vehicle is a complex system with several masses (body, axles, wheels, etc.) connected by elastic elements (suspension, tires, stabilizers, etc.). The masses of individual vehicle parts are divided into two groups – sprung and unsprung. Sprung masses are those whose weight is transmitted through the elastic elements of the suspension. Unsprung masses are those (axles, wheels) whose weight is not supported by the suspension but is transmitted through the tire to the supporting surface.

During motion, the vehicle body experiences oscillations, which are divided into low-frequency up to 25 Hz and high-frequency above 25 Hz. High-frequency oscillations, depending on irregular engine and transmission operation, primarily affect the unsprung masses, while low-frequency oscillations affect the sprung masses (body).

The effect of oscillations on the human body depends on their frequency, amplitude, direction, and duration.

To analyze methods for assessing the impact of vehicle oscillations, we consider the main principles, parameters, and conclusions of vibration theory, which characterize any motion with oscillations.

3.12.1 Vehicle Ride Comfort Indicators

To determine the influence of various factors on the oscillation process, the motion of a single-mass system can be considered (Fig. 3.47).

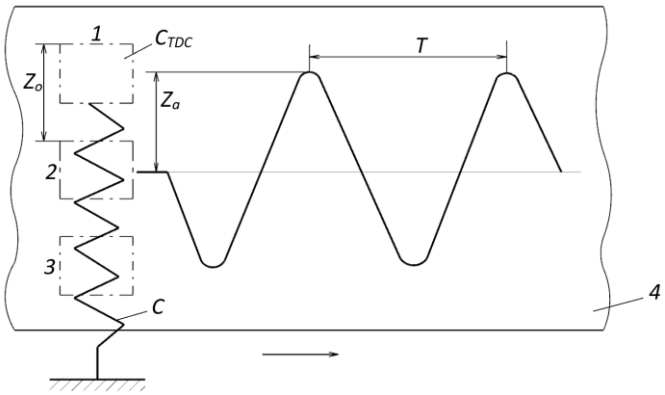

Figure 3.47. Diagram of a mass oscillating on a spring

In the free state, a spring with stiffness c occupies position 1. Under the weight of the load G, the spring takes position 2.

In this case, the static deformation of the spring Z_0 due to the load G is equal to

$$Z_0 = \frac{G}{c}.$$

The differential equation of body oscillation can be written as follows:

$$m \cdot \frac{d^2 z}{dt^2} + c \cdot z = 0;$$

$$\frac{d^2 z}{dt^2} + \omega^2 \cdot z = 0,$$

wherem – mass of the body;

z– vertical displacement of the body;

c – spring stiffness;

$\omega = \sqrt{\frac{c}{m}}$ – natural frequency of free oscillations (eigenfrequency).

The general solution of the equation

$$z = C_1 \cdot \cos \omega \cdot t + c_2 \cdot \sin \omega \cdot t.$$

or

$$z = A \cdot \sin(\omega \cdot t + \varphi),$$

where A – oscillation amplitude;

φ – oscillation phase.

These oscillations are called harmonic oscillations. The oscillation period is equal to

$$T = \frac{1}{\nu} = \frac{2 \cdot \pi}{\omega} = 2 \cdot \pi \cdot \sqrt{\frac{m}{c}} \text{ (sec).}$$

Magnitude

$$\nu = \frac{1}{T} = \frac{\omega}{2 \cdot \pi} = \frac{1}{2 \cdot \pi} \cdot \sqrt{\frac{c}{m}}$$

indicates the number of oscillations per second and is called the technical frequency. In this formula, the quantity ω is called the angular (cyclical) frequency and represents the number of radians per second.

If we express

$$c = \frac{G}{Z_0} = \frac{m \cdot g}{Z_0},$$ то

$$n = \frac{1}{2 \cdot \pi} \cdot \sqrt{\frac{m \cdot g}{z_0 \cdot m}} = \frac{1}{2 \cdot \pi} \cdot \sqrt{\frac{g}{z_0}},$$

Thus, the greater the suspension deflection, the lower the oscillation frequency. Therefore, by using suspension spring elements with lower stiffness, the natural frequency of the vehicle body oscillations can be reduced, which correspondingly increases vehicle ride comfort during motion.

3.12.2 Vehicles suspension assessment indicators

One of the main indicators of vehicles suspension is the oscillation frequency. The human body is adapted to vertical jolts at a frequency of 1.7–2.5 Hz (120 steps per minute).

Another oscillation measure is amplitude – the maximum deviation of the body from the equilibrium position. To improve vehicle comfort, it is necessary to reduce the oscillation amplitude. The features of the human body allow complete elimination of head oscillations at an amplitude of up to 35–40 mm. At larger amplitudes, the driver and passengers experience discomfort and rapid fatigue.

Oscillation velocity is the first derivative of displacement with respect to time (m/s).

Oscillation acceleration is the second derivative of displacement with respect to time (m/s²). Acceleration significantly affects human well-being. High accelerations produce large inertial loads on muscles and internal organs.

Sudden jolts that change acceleration are particularly unpleasant. The faster the acceleration changes, the more uncomfortable the sensation. Therefore, another measure arises – the rate of change of acceleration. This is the third derivative of displacement with respect to time (m/s³). The rate of change of acceleration should not exceed 25 m/s³.

Due to the harmful effects of high-frequency oscillations (vibrations) on the human body, standards have been developed for vibration exposure. The permissible vibration level acting on a driver or passenger is defined by the state standard “Vibration. General Safety Requirements.”

3.12.3 Vehicle Oscillations

The vehicle body has six degrees of freedom and can perform six types of oscillations. Fig. 3.48 shows a diagram of vehicle body oscillations.

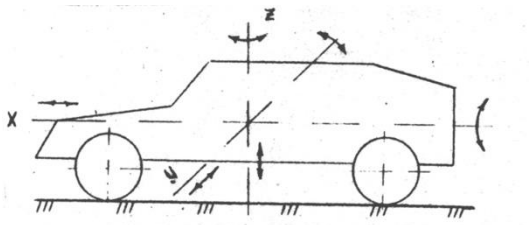

Figure 3.48. Vehicle body oscillation diagram

A degree of freedom refers to the sum of independent displacements of system elements, each considered as a rigid body.

Linear displacements along the x, y, z axes:

S_x – shudder;

S_y – sway;

S_z – bounce.

Angular displacements around the x, y, z axes:

α_x – rocking;

α_y – pitching;

α_z – yawing.

Due to the complexity of studying a system with six degrees of freedom, when calculating suspension, usually only two types of oscillations are considered. That is, the body is considered as a system with two degrees of freedom: bounce and pitching.

These oscillation types are of primary importance for comfort, as they cause the most unpleasant sensations in humans. The first occurs due to large amplitude, the second due to direction, which is poorly tolerated.

Bounce S_z – occurs due to passing over a road irregularity. To reduce bounce, soft suspensions and shock absorbers are used.

Pitching α_y – angular oscillation of the body is shown in the diagram (Fig. 12.3).

Thus, suspension stiffness values should be chosen inversely proportional to the coordinates of the center of gravity. Then the deflections of the front and rear suspensions will be equal, and the vehicle body will move vertically without pitching.

3.12.4 Influence of various factors on vehicle ride comfort

Vehicle ride comfort is significantly affected by the suspension and its technical condition, tires, road irregularities, and load weight.

Suspension type. Independent suspension provides better ride comfort than dependent suspension. The front independent suspension of steering wheels allows obtaining a static deflection equal to the static deflection of the rear dependent suspension. Therefore, when the vehicle encounters an obstacle, the body does not move parallel. Using independent suspension for rear driving wheels also improves ride comfort but increases vehicle cost due to a more complex drive of the driving wheels.

Elastic properties of suspension. Leaf springs, coil springs, torsion bars, and air elements are used as suspension elastic elements. In the front independent suspensions, springs and torsion bars are used, which provide better ride comfort than leaf springs. Air elements also provide high ride comfort due to the ability to adjust suspension stiffness and body height. However, air suspensions are suitable primarily for buses and trucks with significantly varying loads.

Unsprung masses. The weight of unsprung masses (axles, wheels) affects ride comfort; lower unsprung mass weight ensures better comfort by reducing jolts and shocks transmitted from road irregularities to the vehicle's supporting structure.

Suspension damping device. Shock absorbers are used as suspension damping devices. Gas-filled shock absorbers provide better ride comfort than hydraulic ones. Moreover, gas-filled shock absorbers can be installed in any position. However, they are longer and more expensive.

Pneumatic tires. When driving over road irregularities, tires have little effect on low-frequency oscillations (sprung mass oscillations) because they deform less than the suspension. However, tires significantly affect high-frequency vehicle oscillations. More elastic tires improve ride comfort by reducing air pressure and increasing tire profile width.

Suspension technical condition

Ride comfort deteriorates with poor suspension condition.

If shock absorbers are filled with viscous oil, the suspension will be blocked, and jolts will be transmitted to the body. If oil leaks from the shock absorbers, body oscillations will not be damped, causing the body to sway on uneven roads. On large irregularities, vehicle wheels may lose contact with the road surface, deteriorating not only ride comfort but also handling, stability, and thus safety.

Load weight

Changing load weight alters the vehicle's sprung mass, center of gravity position, load on front and rear wheels, and suspension elastic element deformation. Load has a particularly strong effect on ride comfort in trucks.

Road irregularities

Vehicle oscillations are primarily caused by road irregularities.

On asphalt roads, micro-unevenness occurs (height 3–5 mm, length 5–8 m) and waves (height 10–12 mm, length 5–8 m). In real conditions, road irregularities are probabilistic – varying profiles and lengths, which may overlap or follow one another.

As a result, forced oscillations occur, with frequency depending both on irregularity characteristics and vehicle speed.

Adequate ride comfort is ensured by the suspension, which is a component of the vehicle's running system.

3.13 Environmental friendliness

Environmental friendliness is one of the most important operational characteristics of a vehicle. It significantly affects the environment, human and animal health, and plant life. The higher a vehicle's environmental friendliness, the less damage it causes to nature, humans, animals, and plants. Vehicles cause significant environmental damage, leading to irreversible losses.

3.13.1 Vehicle as a source of exhaust gases

During operation, vehicles consume large amounts of oxygen to burn fuel in engine cylinders. By consuming large amounts of oxygen, vehicles heavily pollute the air with exhaust gases. In addition to exhaust gases, crankcase gases and hydrocarbons from fuel evaporation enter the air. The hydrocarbons that evaporate constitute approximately 20% of all hydrocarbons released from vehicles. Of all types of gases (industrial, transport, etc.) emitted into the environment, 75% are vehicle exhaust gases.

Exhaust gases contain up to 280 different substances, including nitrogen and its oxides, carbon dioxide and sulfur dioxide, carbon monoxide, aldehydes (acid-containing organic compounds), hydrocarbons, lead, manganese and their compounds, complex carbon-hydrogen compounds, soot, and many others. All substances in exhaust gases exist in different states: gaseous, liquid, or solid.

The composition of exhaust gases depends on fuel type, additives, engine operating mode, technical condition, driving conditions and modes, etc. Vehicles emit the most toxic substances when starting and braking.

3.13.2 Measures to reduce engine toxicity

Effective measures to reduce engine toxicity include improving combustion processes and mixture formation.

Considering diesel characteristics, their toxicity and smoke emissions can also be reduced by exhaust gas recirculation, maintaining diesel in proper technical condition, ensuring stability of fuel system adjustments, and periodic monitoring of exhaust toxicity and smoke.

Installing catalytic converters (before the muffler) on vehicles, which convert toxic exhaust substances into environmentally safe products, can reduce carbon monoxide toxicity by 80%, nitrogen oxides by 30%, and hydrocarbons by 70%.

Using more advanced and less toxic gasoline anti-knock additives also helps reduce engine toxicity.

3.13.3 Vehicle as a source of noise

Vehicles not only pollute the environment with exhaust gases but also contribute to intensive noise "pollution." Along with industrial, transport, and domestic noise (radio, television, etc.), vehicle noise adversely affects humans. While the human body has protective responses to bright light, burns, etc., it cannot counteract noise effects.

Noise disrupts rest and recovery, disturbs sleep, reduces attention and work capacity. It can lead to central nervous system disorders and various cardiovascular diseases (hypertension, etc.), respiratory tract disorders, endocrine and stomach problems (e.g., ulcers), caused by overall nervous tension due to noise.

Humans perceive sound in the frequency range of 20–20,000 Hz. Noise not only causes health issues but also reduces life expectancy. In large cities, noise pollution shortens life by 8–10 years.

Noise is measured by loudness in decibels (dBA). Noise is considered harmful if it exceeds 40 dBA. At 85 dBA, humans experience discomfort; at 100 dBA and above, breathing and heart rate increase, blood pressure rises, blood composition changes, and brain function is disturbed; above 120 dBA, brain injury occurs. A 1 dBA increase reduces work productivity by 1%.

Vehicle noise varies depending on engine type, operating mode, speed, driving conditions, technical condition, and other factors. Vehicles differ in noise levels.

The main noise sources during vehicle operation are the engine, transmission mechanisms, and tires. The strongest noise occurs during rapid acceleration in 2nd and 3rd gears. The primary noise source may vary depending on speed and vehicle load.

Tire noise is caused by road roughness and large irregularities, friction between the road and tire tread (squeal during braking and turning).

Noise level largely depends on the vehicle's technical condition, systems, and mechanisms. A fully functional vehicle produces less noise.

Vehicle noise is regulated. According to UN ECE Regulation No. 51, the maximum permissible noise level for passenger cars is 80 dBA; for buses, depending on capacity, 81–85 dBA; for trucks, depending on weight, 81–88 dBA.

3.13.4 Measures to Reduce Noise Level

Reducing vehicle noise can be achieved by improving vehicle design, systems, and mechanisms, primarily the engine.

Measures to reduce engine noise include:

-improving intake and exhaust systems;

-using alternative fuels that ensure smoother operation;

-using more advanced fan designs that produce external noise in the 300–600 Hz range;

-reducing noise by using more effective sound-insulating and sound-absorbing materials in the vehicle.

REFERENCES

1.Soltus, A.P. Theory of Vehicle Operational Properties: Textbook. – Kyiv: Aristey, 2008. – 176 p.

2.Volkov, V.P., Kravchenko, O.P. Fundamentals of the Theory of Vehicle Operational Properties: Textbook. – Luhansk: V. Dahl East Ukrainian National University Publishing, 2009. – 248 p.

3.Sakhno, V.P., Bezborodova, H.B., et al. Vehicles. Traction-Speed Properties and Fuel Economy: Textbook. – Kyiv: KVC Publishing, 2004. – 174 p.

4.The Automotive Chassis: Engineering Principles, Second Edition, Butterworth-Heinemann, 2001, ISBN 0 7506 5054 0

5.Vehicles. All-Wheel Steering: Monograph / V.P. Sakhno, A.V. Vakulich; National Transport University. – Kyiv: NTU, 2013. – 180 p. ISBN 978-966-632-197-1

6.http://en.wikipedia.org_mechanical_device

Chapter 4 Technical operation of cars

4.1 Theory of technical operation of cars

The purpose of technical operation of automobiles as a science is to form a deep understanding of the principles of technical operation of automobiles, taking into account international experience, regulatory framework, technical development, as well as adaptation of service systems to operating conditions. To provide knowledge on planning, organization and assessment of the effectiveness of technical maintenance and repair of automobiles.

Technical operation of automobiles is an integrated field that combines knowledge from engineering, natural and economic sciences in order to ensure effective, safe and environmentally friendly use of vehicles in real operating conditions.

Technical operation of automobiles is an interdisciplinary field of knowledge that combines research results and methods from several applied and fundamental sciences. It covers both technical and organizational and economic aspects. Below is a list of the main scientific areas that form the theoretical and practical basis of technical operation of automobiles:

1. Car construction:
   - car structure;
   - understanding the functional purpose, principles of operation and interaction of units, assemblies, systems;
   - identification of elements most vulnerable to wear or damage;
   - ability to correctly assess the technical condition and identify deviations from the norm;
   - selection of maintenance and repair methods taking into account the design features (especially for modern models with electronic control and complex design).
2. Theoretical mechanics and resistance of materials
   - analysis of loads and deformations in structural elements;
   - determination of the conditions of strength and stability of car assemblies;
   - assessment of the residual resource of parts.
3. Car theory
   - laws of car motion;
   - interaction of the car with the road surface;
   - dynamics and operational properties during operation.
4. Materials science
   - wear resistance of materials;
   - influence of the environment on the durability of structures;
   - use of modern composite and nanomaterials.
5. Automotive engines
   - operating principle of internal combustion engines, hybrid and electric power plants;
   - analysis of fuel efficiency, emission toxicity;
   - engine maintenance.
6. Reliability theory and diagnostics
   - failure theories, failure-free operation;
   - methods of diagnosing technical condition (vibration analysis, thermography, OBD-II, telematics);
   - forecasting of resource and remaining service life.
7. Automotive repair technology
   - technological processes of parts restoration;
   - regulation of maintenance and repair operations;
   - selection of equipment and equipment for road transport enterprises.
8. Organization and management of technical maintenance
   - planning and logistics of technical maintenance;
   - calculation of service standards;
   - optimization of the work of service enterprises.
9. Information technologies and telematics
   - technical condition monitoring systems (IoT, CAN-bus, GPS);
   - automation of service accounting;

• databases, forecasting maintenance intervals (Big Data, Predictive maintenance).

10. Ecology and environmental protection
    • emissions of harmful substances;
    • disposal of waste materials;
    • implementation of standards (Euro-6, EPA, ISO 14001).
11. Economics and transport management
    • Life cycle cost of a vehicle (LCC);
    • Economics of repairs and depreciation;
    • Calculation of maintenance costs and forecasting the budget of a vehicle fleet.
12. Other related sciences:
    • Electrical engineering and electronics - the study of electronic systems and control systems;
    • Thermodynamics - analysis of thermal processes in internal combustion engines;
    • Chemistry of lubricants - the influence of the composition of liquids on the wear and tear and resource of components;
    • Law - regulatory and legal regulation of transport operation.

4.1.1 Tasks of technical operation

Technical operation is based on the principles of continuous maintenance of the operability of motor vehicles. The main tasks of technical operation are:

• traffic safety - prevention of failures that can lead to accidents.
• reliability and availability of transport - minimization of downtime due to malfunctions.
• cost optimization - prevention of excessive repairs.
• reduction of harmful impact on the environment - compliance with emission standards and economical fuel consumption.
• implementation of international standards (ISO 14229, ISO 7637, SAE J1939, etc.).

In international practice, the tasks of technical operation also include: data-driven maintenance, eco-driving support systems, use of predictive analytics to predict failures.

Technical operation of vehicles is a set of organizational and technical measures that ensure the maintenance of the operational condition of vehicles.

The system of technical operation of motor transport is divided into three independent functional subsystems:

- subsystem of commercial operation of vehicles;
- subsystem of technical operation of vehicles;
- subsystem of technical maintenance of vehicles.

The subsystem of commercial operation of vehicles is a subsystem that ensures the use of vehicles for their intended purpose.

The subsystem of technical operation of vehicles is a subsystem that includes vehicles, drivers, means of organizing traffic, regulations and standards that determine the selection and maintenance of the most advantageous modes of operation of vehicles, the organization of storage of technically sound vehicles, as well as the maintenance and restoration of lost operational capacity of vehicles in the process of performing transport work.

The subsystem of technical maintenance of vehicles is a subsystem of interconnected means, maintenance documentation and performers that are necessary to maintain and restore the quality of vehicles included in this subsystem. The maintenance subsystem includes preventive and restorative (repair) work.

Other researchers identify the following interconnected subsystems of technical operation of vehicles:

1. maintenance and repair subsystem - provides support and restoration of the vehicle's performance;
2. diagnostic subsystem - determines the technical condition of components without disassembly;
3. supply subsystem - provides spare parts, materials and equipment;
4. organizational and management subsystem - is responsible for planning, control and analysis of efficiency.

Since the technical operation of vehicles is designed to ensure the performance of vehicles, the following measures are identified:

Preventive work – these are measures aimed at maintaining the object in a technically sound condition that meets the requirements of technical documentation and allows it to perform its functions.

Restorative work – these are measures aimed at restoring the technically sound condition of the object to ensure the performance of its functions in the future.

The ratio of work between these two groups is quite different, but at the moment there is a tendency to reduce the labor intensity of preventive work and increase the labor intensity of repair work. In any case, the maintenance subsystem should, with a certain probability, ensure the use of cars for their intended purpose with minimal cost.

In this regard, there are two strategies for managing the technical condition of vehicles:

Planned preventive strategy - provides for regulated maintenance intervals. It was widely used in the USSR and post-Soviet countries, but remains relevant for some categories of transport, especially in difficult climates or in the absence of diagnostic equipment.

Management strategy based on technical condition - is used in most EU countries, the USA, Japan, Korea. It is based on:

- regular computer diagnostics (On-Board Diagnostics - OBD-II, CAN-bus);
- remote monitoring (telematics, IoT);
- forecasting the remaining resource of units (predictive maintenance);
- automatic reminder via the interface of a multimedia system or application.

In addition, several service models are distinguished in international practice:

- Fixed service intervals (Mercedes-Benz, BMW) - maintenance every 15,000–30,000 km or 12 months;
- Flexible service intervals (Volkswagen, Audi) — adapting intervals to driving style;
- Maintenance-as-a-Service — complete outsourcing of maintenance (for example, in freight transport DHL, FedEx).

4.1.2 Types of maintenance and repair

The main types of maintenance (preventive work) include:

- daily maintenance (DM): performed before and after a shift (visual inspection, checking fluid levels, cleaning).
- - periodic maintenance (PM):
    a) PM-1 - basic periodic maintenance.
    b) PM-2 - extended periodic maintenance with more procedures.
- - seasonal maintenance (SM): before the change of season.
- - diagnostics (D): checking the technical condition using diagnostic tools.

The main types of repair (repair work) include:

- current repair (RM): eliminating minor problems.
- associated repair (RR): eliminating minor problems during vehicle maintenance
- overhaul (OR): complete restoration of vehicle systems or assemblies.

4.1.3 Maintenance intervals

The maintenance intervals (Table 4.1) depend on:

- manufacturer's recommendations;
- climatic and road conditions of the vehicle;
- engine type (petrol, diesel, electric);
- driving style and other factors.

Table 4.1 – Vehicle maintenance intervals

Vehicle type	PM-1	PM-2
Car	10000...15000 km	20000…30000 km
Truck	20000...30000 km	40000...60000 km
Bus	20000...30000 km	40000...60000 km

Below is a suggested maintenance schedule for your vehicle in Table 4.2.

Table 4.2 – Maintenance Types and Frequency

Type of Maintenance	Frequency	Main Operations
Daily Maintenance (DM)	Daily (before and after trip)	Visual check, fluid levels, lights, cleaning
PM-1	Every 5,000–10,000 km	Brake system check, suspension, tires, oil change
PM-2	Every 15,000–30,000 km	Includes PM-1 + ignition, fuel system, transmission
Seasonal Maintenance (SM)	Twice a year	Change fluids, battery check, heating/cooling
Diagnostics (D)	Per schedule or condition-based	Troubleshooting using diagnostic tools
Current Repair (CR)	As needed	Fix small faults, partial disassembly
Overhaul (OH)	100,000–300,000 km	Full disassembly and unit restoration

The main approaches to forming the maintenance frequency:

a) factory (recommended) approach. It is set by the manufacturer for typical operating conditions. For example: TO-1 every 15,000 km or once a year;

b) by mileage. Maintenance is carried out after a certain distance has been covered.

c) by calendar. Maintenance is carried out after a certain period of time (for example, every 6 or 12 months).

d) by technical condition. Diagnostic tools, telematics, on-board computers are used. Maintenance is carried out only when real signs of need are detected.

e) adaptive planning. A combination of the above approaches is most often used in modern cars.

Factors affecting the maintenance frequency:

a) operating conditions: urban mode ("start-stop") - increased load; off-road, dust, high temperatures - accelerated wear;

b) driving style: aggressive driving reduces the service interval;

c) fuel and lubricant quality: poor fuel accelerates filter clogging and carbon deposits in internal combustion engines;

d) climate: humidity, salt, temperature changes require seasonal maintenance and additional work;

e) age and condition of the car: old cars have reduced maintenance intervals;

f) quality of spare parts: poor quality spare parts require reduced intervals between regular maintenance

4.1.4 Maintenance and repair standards

The main regulatory indicators of maintenance and repair include:

- intervals between maintenance (km or hours or months);
- maintenance complexity (standard hours);
- resource of components to the KR (km or hours or months);
- maximum permissible wear parameters.

Maintenance standards are mostly developed by vehicle manufacturers, state regulatory bodies, and may be regulated by national or international standards (standards, technical regulations).

It is worth noting that maintenance standards are usually set for normal vehicle operating conditions. However, if the vehicle is operated in conditions other than normal, then the standards are adjusted. Adjustment of standards is necessary to take into account:

- climatic conditions (extreme temperatures, dustiness);
- topography of routes (mountains, frequent climbs);
- load on transport (overload, frequent stops);
- intensity of use (taxis, couriers, logistics).

Adjustment methods:

- coefficients of operating conditions (K1, K2…);
- point system for assessing conditions;

• adaptive diagnostics algorithms (for example, in telematics).

When adjusting standards based on coefficients of operating conditions, the following are taken into account:

a) category of operating conditions. Adjustment of standards for technical maintenance and repair of vehicles depending on operating conditions is carried out in accordance with their classification, which includes five categories of operating conditions.

The category of operating conditions of vehicles is characterized by the type of road surface, the type of terrain along which the road runs, and traffic conditions and is taken into account by the coefficient K1, which is used to adjust the labor intensity of technical maintenance and repair (1.0 ... 1.5), mileage before overhaul (1.00 ... 0.6) and spare parts costs (1.0 ... 1.65), (technical maintenance frequency 1.0 ... .0.6);

b) modification of rolling stock and features of the organization of its work. When forming standards, the need to adjust them by type and modification (design purpose: cars with trailers, dump trucks, etc.) of the vehicle is taken into account, taking into account the specifics of its transport activity.

Modification of rolling stock and peculiarities of its work organization are taken into account by the coefficient K2, which is used to adjust the labor intensity of maintenance and repair (1.0 ... 1.25), mileage to overhaul (1.00 ... 0.75) and spare parts consumption (1.0 ... 1.3);

c) natural and climatic conditions are taken into account when determining the frequency of maintenance, specific labor intensity of repair and mileage norms to overhaul. Adjustment of natural climatic conditions is carried out using the coefficient K3, which changes accordingly taking into account the aggressiveness of the environment when determining: maintenance frequency - from 0.72 to 1.0; specific labor intensity of repair - from 0.9 to 1.43; when determining the mileage to the first overhaul - from 0.63 to 1.1; spare parts consumption - from 0.9 to 1.54;

d) mileage from the beginning of operation (age of the vehicle) is taken into account when adjusting the specific labor intensity of car repairs. Adjustment by age is carried out using the K4 coefficient.

For trucks, this coefficient adjusts the labor intensity, varying from 0.4 (for mileage that is less than 25% of the vehicle's resource before overhaul) to 2 or more for a vehicle's mileage that is 2...1.75 times greater than the resource before overhaul.

Depending on the mileage from the beginning of operation to overhaul, the duration of the vehicle's downtime in maintenance and repair also changes, which is taken into account by the K4 coefficient, which varies within 0.7...1.4. When a vehicle's mileage exceeds its value before the first overhaul, the K4 value is taken equal to 1.4;

e) the level of concentration of rolling stock. When adjusting the standards, the size of the motor transport enterprise and the number of brands of the fleet being serviced are taken into account. This is taken into account by the number of technologically compatible groups, i.e. groups that require the same maintenance facilities (posts, equipment) for the maintenance and repair of vehicles in the fleet (at least 25 in the group). The correction factor is the coefficient K5.

Adjustment using this coefficient does not make sense in small and low-brand (1…3 brands) enterprises.

The resulting correction factor is obtained by multiplying the corresponding coefficients, and it should not be less than 0.5.

The scoring system for assessing vehicle operating conditions allows you to objectively determine the degree of load on the vehicle and make adjustments to the maintenance frequency, reducing or increasing the intervals between maintenance depending on the intensity of operation.

The purpose of the scoring system is: classification of operating conditions (normal, complicated, heavy); quantitative assessment of the impact of individual factors on vehicle wear; establishment of a correction factor (Kk) for calculating the maintenance frequency.

Below, in Table 4.3, as an example, the main assessment factors and their scoring scale are given.

Table 4.3 – Main assessment factors and their scoring scale

No.	Operating conditions factor	Situation description	Points
1	Type of terrain	Hard-surfaced roads (highway, highway)	0
		Combined terrain (asphalt + dirt)	1
		Permanent off-road, quarries, rural service station	2
2	Traffic profile (driving mode)	Mostly highway, steady traffic	0
		Urban cycle, heavy traffic	1

No.	Operating conditions factor	Situation description	Points
		Permanent start-stop, traffic jams, delivery service	2
3	Climatic conditions	Moderate climate	0
		High temperatures / humidity / dustiness	1
		Extreme temperatures, high humidity	2
4	Cargo / passenger nature	No load or light load	0
		Average load	1
		Permanent full load	2
5	Driving style	Smooth, economical driving	0
		Mixed	1
		Aggressive driving	2
6	Monthly mileage	Up to 2,000 km	0
		2,000–5,000 km	1
		Over 5,000 km	2
7	Fuel / lubricant quality / service station	Certified, high-quality	0
		Average quality	1
		Frequent deviations / self-service	2

The calculation of coefficients can be carried out according to the example given in Table 4.4.

Table 4.4 – Interpretation of the result of the adjustment according to the scoring scale

Total points	Operating conditions category	Characteristics	Correction factor (Kk)
0–4 points	Normal	Standard conditions	1.0
5–8 points	Complex	Moderate loads, sometimes critical	0.9
9–12 points	Severe	Constant high loads	0.8
13+ points	Extreme	Extreme operating conditions	0.7 or individual calculation

Example: Let the basic interval TO-1 = 15,000 km, operating conditions – 10 points → Kk = 0.8, then the new interval TO-1 = 15,000 × 0.8 = 12,000 km

The scoring system has several advantages compared to the adjustment based on coefficients: objectivity of the assessment; adaptation to real conditions; improvement of the reliability and resource of the car; savings on unscheduled repairs; reasonable management of the fleet.

Adaptive diagnostics algorithms are a modern approach in the international practice of manufacturers such as Mercedes-Benz, Volvo, BMW, etc., which use flexible maintenance intervals that are adjusted automatically:

a) the system analyzes the driving style, speed, number of starts, load;

b) the car itself informs about the need for maintenance through the dashboard or mobile application.

Telematics maintenance is also actively used in fleets, using the Webfleet, Geotab, Cartrack platforms with predictive algorithms.

Thus, according to the manufacturer's data, taking into account specific operating conditions, a vehicle maintenance schedule is developed, an example of which is given in Table 4.5.

Table 4.5 – General Maintenance Intervals

Interval	Maintenance Task	Notes
Every 5,000 – 10,000 km (or every 6 months)	Engine oil and filter change; Check tire pressure and tread depth; Inspect lights, wipers, and horn	Use manufacturer-recommended oil; rotate tires if needed

Interval	Maintenance Task	Notes
Every 15,000 – 20,000 km (or annually)	Air filter replacement; Cabin (pollen) air filter replacement; Brake inspection (pads, discs, fluid); Battery inspection	Check for corrosion, clean terminals; replace filters if clogged
Every 30,000 km	Fuel filter replacement; Inspect suspension and steering components; Transmission fluid check (if applicable)	Replace fuel filter if non-lifetime type
Every 40,000 – 50,000 km	Coolant fluid check and top-up; Wheel alignment and balancing; Brake fluid replacement	Brake fluid should be flushed every 2–3 years
Every 60,000 – 80,000 km	Spark plug replacement; Transmission fluid change (if non-sealed); Drive belt inspection/replacement	Inspect CV joints and axle boots
Every 100,000 km	Timing belt replacement (if equipped); Water pump replacement (often done with timing belt)	Not all vehicles have timing belts (some use chains)
Every 150,000 – 180,000 km	Coolant flush; Power steering fluid flush; Differential and transfer case fluid (AWD/4WD)	Also check underbody for corrosion and undercoating
Every 200,000 km	Replace engine and transmission mounts; Replace oxygen sensors; Inspect exhaust system thoroughly	May vary by manufacturer
Seasonal Maintenance Winter	Check antifreeze level and concentration; Inspect battery condition; Install winter tires	–
Seasonal Maintenance Summe	Check air conditioning system; Inspect cooling system hoses and radiator; Replace windshield wiper blades if worn	–
Digital Diagnostic Checks, during maintenance, repair or if necessary	Modern vehicles are equipped with onboard diagnostics (OBD-II). Periodic scanning with diagnostic tools helps identify hidden issues including: - Emission system faults - Sensor irregularities - Transmission or engine trouble codes	–

Summing up this section, it can be noted that technical operation is a critically important component of vehicle management. The use of modern service systems, data analytics, digital diagnostics and international standards allows not only to reduce costs, but also to increase the safety and environmental

friendliness of road transport. A specialist must have knowledge of both classic and innovative maintenance systems.

4.2 Maintenance and repair of cars

A modern car is a complex technical complex that combines dozens of interconnected components, mechanisms and systems that ensure its reliability, safety, economy and environmental friendliness during operation. To maintain these characteristics at the proper level throughout the entire life cycle of the car, systematic and high-quality maintenance of each of its components is necessary.

This section discusses the features of servicing the main units and systems of the car: power unit, transmission, chassis, steering, brake system, electrical equipment and auxiliary systems (air conditioning, safety, control, etc.). Special attention is paid to typical malfunctions, methods of monitoring the technical condition and preventive measures.

Knowledge of the principles of servicing car units and systems allows you to:

- prevent premature wear of units;
- ensure stable operation of the car in various operating conditions;
- reduce costs for repairs and downtime;
- increase traffic safety.

4.2.1 Internal combustion engines

4.2.1.1 Diagnosis

Engine diagnostics is a system of methods and means for detecting the technical condition, degree of wear, malfunctions and deviations in the operation of a power unit without disassembling it. The main tasks of diagnostics are:

- timely detection of malfunctions;
- forecasting the remaining resource;
- substantiating the volume and timing of maintenance or repair;
- increasing the efficiency and reliability of engine operation.

To date, gasoline, diesel, gas, and electric engines have become the most widespread, so in the future, attention will be focused on these types of internal combustion engines.

General stages of diagnosing internal combustion engines include:

a) external inspection (presence of leaks, condition of fasteners, contamination);
b) connecting diagnostic equipment (OBD-II, scanners, engine testers, gas analyzers);
c) reading engine operating parameters (temperature, pressure, revolutions, mixture, spark, etc.);
d) analysis of results (comparison with standards);
e) identification of malfunctions or deviations;
f) formation of conclusions and recommendations.

The main methods and features of diagnosing engines of various types of cars are given in Table 4.6.

Table 4.6 – Diagnostics of car engines

Engine type	Main diagnostic objects	Diagnostic methods	Features
Gasoline	- power supply system (injector, pump, throttle); - ignition (spark plugs, coils, ECU); - sensors (MAF, MAP, O_2, TPS); - timing, compression	- OBD-II scanning; - oscillography of signals; - gas analysis; - compression measurement; - spark check	Ignition system performance is important; accuracy of fuel-air mixture is critical to efficiency

Engine type	Main diagnostic objects	Diagnostic methods	Features
Diesel	- injection system (injectors, fuel injection pump, Common Rail); - turbine, EGR, DPF; - ECU; - cylinder-piston group	- fuel pressure check; - injector balance; - opacity (smoke); - OBD diagnostics; - pressure and temperature sensor check	No ignition, high sensitivity to fuel, complex fuel system
Gasoline (NGV)	- reducer, gas injectors; - gas pressure and temperature sensors; - NGV ECU; - gas/petrol switching system	- leakage diagnostics; - OBD mixture scanning; - gas pressure check; - analysis of NGV injector signals	Operation on two types of fuel; precise adjustment of the mixture and gas pressure is necessary
Electric (EV)	- electric motor; - inverter and controller; - high-voltage battery; - recuperation and cooling system	- CAN/OBD diagnostics; - temperature and load check; - battery degradation analysis; - inverter and power circuit testing	No timing, fuel system; important indicators of temperature, voltage, current, battery condition

When diagnosing car engines, it is necessary to take into account that each type of engine requires a specific approach to diagnostics, electronic control systems are a key source of information about the condition of the engine, comprehensive diagnostics can prevent expensive repairs, maintain optimal performance, and ensure environmental safety.

4.2.1.2 Maintenance technologies

Engine maintenance is one of the key influences aimed at ensuring the operability of the vehicle. Below is a summarized table 4.7 of maintenance technologies for the four main types of engines — gasoline, diesel, LPG and electric (EV) – with examples of key operations, intervals and features of maintenance.

Table 4.7 – Car engine maintenance technologies

Engine type	Key maintenance operations	Interval	Special aspects / modern technologies
Gasoline	- oil and oil filter replacement; - air and fuel filter replacement; - spark plug replacement; - timing inspection, throttle cleaning	8,000–15,000 km (oil); 15,000–30,000 km (filters)	- OBD diagnostics; - gas analysis and spark test; - ultrasonic cleaning of injectors
Diesel	- oil and fuel filter replacement; - injection system inspection; - turbine, EGR, DPF inspection; - glow plug inspection	10,000–20,000 km (oil); 20,000–30,000 km (filters)	- diagnostics of injectors, CR pressure; - DPF regeneration; - turbine monitoring
Gasoline (NGV)	oil and oil filter replacement; - gasoline filter replacement;	8,000–15,000 km (oil); 10,000–20,000 km (filters); 60,000–100,000 km	- calibration of NGV via software; - monitoring of gas consumption;

Engine type	Key maintenance operations	Interval	Special aspects / modern technologies
	- reducer and line inspection; - gasoline ECU adjustment; - pressure and spark plug condition inspection	(reducer)	- diagnostics of mixing "gas/petrol"
Electric (EV)	- HV battery diagnostics (SOC, SOH); - battery and inverter cooling inspection; - high-voltage element insulation test	According to system indicators or every 20,000–30,000 km	- CAN diagnostics; - battery telemetry; - remote control of degradation via mobile applications

Automotive engine maintenance technologies differ significantly depending on their type — gasoline, diesel, LPG or electric. The main tasks of maintenance are to maintain reliability, fuel efficiency, environmental safety and engine life.

Each type of engine requires specific operations — from checking ignition and injectors to monitoring high-voltage systems. Modern technologies, such as OBD diagnostics, telemetry and software calibration, significantly increase the efficiency and accuracy of maintenance.

Rational compliance with maintenance regulations helps reduce repair costs, increase traffic safety and maintain environmental standards.

4.2.1.3 Repair technologies

General principles of engine repair include the following stages:

a) accurate diagnostics of faults. Repair begins with a comprehensive diagnostic that determines the nature and extent of damage - both mechanical and electronic: use of OBD-II scanners, CAN diagnostics, compression testers, fuel pressure, power supply parameters, use of stands for checking nozzles, injectors, cooling systems.

b) repair or replacement of components. Depending on the type of fault, the following is carried out:

- repair (geometry restoration, replacement of seals, grinding, adjustment);
- complete or partial replacement of the component (mainly for electronic components and assemblies that cannot be disassembled).

c) quality control and functional testing. Each stage of repair is completed with mandatory testing - at idle, under load, with control of engine parameters (temperatures, revolutions, pressure, voltage).

d) documentation. After the work is completed, defect reports, inspection reports, marking of replaced spare parts, and adaptation of new components to the ECU are generated.

Features of engine repair of different types are given in Table 4.8.

Table 4.8 – Features of engine repair of different types.

Engine type	Typical faults	Repair principles	Features
Gasoline	– wear of the cylinder-piston group (cylinder-piston group); – oil leakage; – ignition problems; – throttle valve, sensors (TPS, MAP, MAF)	– cylinder boring or sleeve-lining; – cylinder head and valve replacement or repair; – timing adjustment; – ignition system restoration	– high sensitivity to fuel quality; – need for precise ignition adjustment; – frequent contamination of the throttle system

Engine type	Typical faults	Repair principles	Features
Diesel	– injector malfunctions; – wear of the fuel injection pump; – DPF clogging; – turbocharger breakdowns; – leaks in the boost or EGR system	– Common Rail injector testing and repair; – turbine inspection and replacement; – DPF regeneration or replacement; – system compression and tightness check	– high pressure operation (up to 2000 bar); – complex fuel equipment; – dependence on the health of the ECU, sensors, EGR, DPF
Gasoline (NGV)	– gas leaks; – injector contamination; – problems with the reducer; – failure in the NGV calibration; – increased carbon deposits in the combustion chamber	– reducer, valve, and injector repair or replacement; – leakage testing; – full recalibration of the LPG system; – gasoline mode synchronization	– increased thermal load on the cylinder head and valves; – sensitivity to the quality of the gas tank installation; – need for regular maintenance of filters and sensors
Electric (EV)	– battery overheating; – loss of cell capacity; – inverter or BMS failure; – mechanical defects in the gearbox or bearings	– CAN bus, BMS diagnostics; – balancing or replacement of HV battery modules; – power electronics repair or replacement; – gearbox or winding inspection and repair	– high voltage operation (400–800 V); – requirements for special tools and tolerances; – complex electronic control system

Table 4.8 only provides a general overview of the principles of engine operation; for each specific repair case, it is necessary to study the vehicle manufacturer's repair documentation in detail, since repair methods can vary significantly. It is also necessary to note that today most elements of automobile engines are practically not subject to restoration, but are replaced with new ones. Repair of modern engines requires an interdisciplinary approach - knowledge of mechanics, electronics, software, as well as strict adherence to safety standards. Given the complexity and integration of systems, most repairs are increasingly moving into the format of modular replacement, adaptation and testing with the involvement of digital technologies.

4.2.1.4 Technological equipment

To diagnose, maintain, and repair automobile engines, specialized equipment is required, the list of which is usually established by the manufacturer. However, a generalized list of equipment for each type of engine can be provided (Table 4.9).

Table 4.9 – List of equipment required for diagnostics, maintenance and repair of gasoline, diesel, LPG and electric engines

Type of work	Engine type	Main equipment
Diagnostics	Petrol	– OBD-II scanner; – oscilloscope; – compression tester; – gas analyzer; – diagnostic software (VCDS, Autocom, Launch)
	Diesel	– OBD-II/HD OBD scanner; – CR injector tester; – fuel pressure gauge; – exhaust gas smoke analyzer; – diagnostic stand for high-pressure fuel pumps

Type of work	Engine type	Main equipment
	Gas	– LPG system leak tester; – gas analyzer; – LPG programmer/calibrator; – OBD scanner
	Electric	– CAN diagnostic scanner; – battery analyzer (SOH/SOC); – HV voltmeter; – oscilloscope; – EV diagnostic software
Maintenance	Petrol	– lift or inspection ditch; – oil change unit; – compressor; – equipment for replacing filters, spark plugs
	Diesel	– diesel fuel drain unit; – CR rail pressure tester; – injector test stand; – DPF cleaning equipment
	Gas	– gas filter test device; – LPG calibration software; – gas system pressure gauge; – set of keys for NGV
	Electric	– HV battery cooling system; – EV battery case removers; – infrared thermometer; – insulating tools
Repair	Petrol	– boring or honing machine; – cylinder head repair stand; – torque wrench; – valve grinding device
	Diesel	– high pressure fuel pump repair table; – injector adjustment stand; – turbocharger test stand; – diesel particulate filter regeneration device
	Gas	– reducer replacement kit; – calibration software; – leakage test setups; – gas shut-off valves
	Electric	– HV cell work table; – insulating gloves (class 00 or higher); – HV tools; – BMS configurator

The methods of diagnosing, maintaining and repairing car engines considered in this section are the basis for ensuring their reliable, safe and efficient operation throughout their entire service life. The design features of different types of engines — gasoline, diesel, LPG and electric — determine the specifics of approaches to technical support and repair, as well as the requirements for equipment and qualifications of specialists.

An important component is the use of modern diagnostic tools that allow you to quickly detect malfunctions and prevent their development, which significantly reduces repair costs and increases the overall reliability of the vehicle. Regular maintenance, which meets regulatory requirements and manufacturers' recommendations, helps to extend the engine's service life and preserve its technical characteristics.

During the repair process, it is necessary to adhere to established technologies and principles, which ensures the restoration of engine performance and safety. Special attention is paid to modern power plants, taking into account their complexity and specifics of operation, in particular electric engines.

Thus, a comprehensive approach to diagnostics, maintenance and repair is the key to the effective operation of automobile engines and the development of technical culture in the field of motor transport.

4.2.2 Transmission of cars

The transmission is one of the most important systems of a car, providing the transmission of torque from the engine to the drive wheels, taking into account driving conditions, load and required speed. The transmission includes a clutch, gearbox, cardan or transfer gear, final drive, differential and wheel drive. Each of these components requires timely maintenance, since their technical condition directly affects the dynamics of the car, fuel consumption, driving comfort and safety.

Automatic, robotic and continuously variable transmissions are increasingly used in modern cars, which are characterized by a complex design, electronic control and high sensitivity to the technical condition of the lubrication, cooling and control systems. This necessitates a thorough knowledge of both the principles of operation of transmission mechanisms and the features of their technical maintenance.

The purpose of this section is to familiarize with the technology of maintenance of various types of transmissions, diagnostic procedures, regulations for inspections and replacement of working fluids, as well as modern approaches to monitoring the condition of transmission units. Special attention is paid to preventive measures that allow to extend the service life of the transmission and reduce the likelihood of failures during operation.

4.2.2.1 Diagnosis

The transmission of a modern car is a complex system that includes mechanical, hydraulic and electronic components. Its effective operation determines the smoothness of the ride, the dynamic characteristics of the car, the noise level, the economy and safety of movement. Given the wide range of transmission types, the diagnostic methods differ depending on the design and level of automation.

Classification of transmissions for diagnostics:

– mechanical transmission (MT) - a classic manual gearbox;

– automatic transmission (AT) - a hydromechanical gearbox with a planetary mechanism and a torque converter;

– robotic transmission (RT) - a mechanical gearbox with automated clutch control and gear shifting;

– continuously variable transmission (CVT) - a transmission with a variator (belt or chain);

– electric transmission (in electric vehicles) - a system of gearbox and electronic torque control.

The main tasks of transmission diagnostics:

– identification of worn or faulty elements;

– analysis of noise, vibrations and malfunctions;

– checking the tightness and level of the working fluid;

– testing the control system (electronic units, sensors, solenoids);

– forecasting the resource of the main transmission components.

Features of diagnostics of transmissions of different types:

a) Manual transmission: main attention is paid to checking the wear of synchronizers, bearings, gears, clutch; endoscopes may be used.

b) Automatic transmission: computer diagnostics of solenoids, control units, checking oil pressure, torque converter, degree of wear of clutches are used.

c) CVT: the condition of the pulley, belt, solenoids is monitored, the smoothness of the gear ratio change is checked, the operating temperature is analyzed.

d) Robotic transmission: the clutch drive system, shift actuators, gear engagement drives are diagnosed; important software testing of the switching logic.

e) Electric transmission drive (EV): diagnosis is performed via the CAN bus, analysis of the parameters of the electric motor, inverter, torque and speed sensors.

The main methods of transmission diagnostics are given in Table 4.10.

Table 4.10 – The main methods of transmission diagnostics

Method	Description
Visual inspection	Checking the integrity of the housings, the presence of oil leaks, fasteners.
Acoustic diagnostics	Determining extraneous noises (for example, bearing hum, gear knocking) while driving or idling.
Functional check	Assessing the operation of gear shifting, clutch/braking reactions of the transmission, engaging gears under load.
Computer diagnostics	Reading fault codes (DTC) from the control units of the automatic transmission, manual transmission, CVT or electric drives, monitoring parameters in real time.
Fluid testing	Assessing the color, odor, presence of impurities, temperature of the ATF, CVT fluid or transmission oil.
Thermal imaging diagnostics	Detecting overheating of transmission or differential components.
Dynamic testing on the bench	Used to diagnose automatic transmissions, CVTs, electric drives under variable load conditions, with simulation of road conditions.

Modern transmission diagnostics require a comprehensive approach - a combination of mechanical, electronic and software analysis. Given the high complexity of the structures and integration with other vehicle systems, effective diagnostics is possible only with the availability of modern equipment, appropriate software and qualified personnel.

4.2.2.2 Maintenance technologies

Maintenance of vehicle transmissions is a set of regulated operations aimed at ensuring reliable operation of torque transmission units, reducing wear and preventing failure of transmission components. Maintenance is performed in accordance with the manufacturer's regulations and taking into account the type of transmission.

The main objectives of transmission maintenance:

– maintaining the tightness of units;

– monitoring and replacing working fluids;

– preventing excessive wear of gear pairs, bearings, clutches;

– detecting signs of unstable operation or potential malfunctions;

– maintaining the proper level of lubrication and cooling.

General recommendations for transmission maintenance:

a) Always use only those fluids and lubricants recommended by the manufacturer.

b) Fluid replacement should be accompanied by updating filters and seals.

c) For transmissions with electronic control, adaptation and erasing of errors is mandatory after maintenance.

d) It is recommended to record the maintenance in the electronic service history (especially for warranty cars).

e) It is necessary to observe the temperature regime of the fluid when checking it (especially in automatic transmissions and CVTs).

Technological operations for transmission maintenance by type are given in Table 4.11.

Table 4.11 – Technological operations for transmission maintenance by type

Transmission type	Scheduled maintenance operations	Service features
MT	– Checking the level and condition of the transmission oil – Changing the oil (every 60–100 thousand km) – Inspection of seals, drives, fasteners	– Simple maintenance, but requires high-quality lubrication; – Clutch and gear lever control.
AT	– Checking the ATF level – Partial or complete replacement of ATF (every 50–80 thousand km) – Filter replacement	– Sensitivity to fluid level and quality; – Use of special equipment for replacement;

	– Flushing the heat exchanger	– Mandatory adaptation via diagnostic software.
CVT	– Replacing the CVT fluid (every 40–60 thousand km) – Inspection of the variator belt/chain – Cleaning the magnetic filter – Testing the solenoids	– High sensitivity to fluid quality; – Requires accurate temperature check during maintenance.
RT	– Updating the control software – Checking the clutch drive system – Checking the hydraulic/electric actuator – Checking the oil level	– Requires computer adaptation; – Regular calibration and gear shifting system check.
Electric drive	– Inspecting the condition of the gearbox coolant – Checking the tightness of the housing and fasteners – Checking the noise and vibration level	– Gearbox oil changes infrequently (100–150 thousand km); – Requires verification via CAN diagnostics.

Transmission maintenance is an important element of system support for vehicle performance. Taking into account the design features of different types of transmissions allows you to choose the optimal maintenance technology, which helps reduce operating costs and increase the resource of units.

4.2.2.3 Repair technologies

Repair of transmissions of modern cars is a complex technological process that requires a highly qualified performer, specialized equipment and strict adherence to factory instructions. Given the wide variety of transmission types - from classic mechanical to electronically controlled automatic and electric drives - approaches to repair differ significantly in content and complexity.

The main tasks of transmission repair:

a)Restoration of the performance of individual units and torque transmission systems;
b)Elimination of mechanical and electronic malfunctions;
c)Replacement of worn or damaged elements;
d)Restoration of tightness of housings and assemblies;
e)Conducting tests and inspections after repair.

Classification of repairs:

– current repairs: replacement of seals, oil seals, replacement of fluids, elimination of minor defects without disassembling units;

– medium repairs: partial disassembly of units, replacement of bearings, gears, clutches, solenoids;

– major repairs: complete disassembly of the transmission, restoration of body parts, geometry, mechanical connections and electronics.

Technological features of repairing transmissions of various types are given in Table 4.12.

Table 4.12. – Technological features of repairing transmissions of various types

Transmission type	Typical malfunctions	Repair operations	Repair features
MT	Wear of synchronizers, bearings, gears, backlash, oil leakage	Disassembly of the gearbox housing, replacement of bearings, gears, synchronizers, replacement of gaskets and oil seals	Simple design, possible local replacement of elements, availability of spare parts
AT	Gear slippage, shocks when shifting, overheating, wear of clutches, solenoid malfunctions	ECU diagnostics, removal and disassembly of the automatic transmission, replacement of the torque converter, clutches, gaskets, flushing of channels, adaptation	Requires a specialized stand, high cleanliness, software calibration after repair
CVT	Belt/chain slippage, pulley	Replacement of the belt,	Extreme sensitivity

	damage, overheating, hydraulic failures, solenoid failure	pulleys, solenoids, hydraulic unit, flushing of the system, software update	to contamination, precise compliance with tightening torques, difficulty in balancing
RT	Gear delay or skipping, actuator breakdowns, clutch or ECU malfunctions	Replacement of drives, electric or hydraulic actuators, software calibration, restoration of the shifting system	Need for integration with the control unit, adaptation after each intervention
Electric drive	Increased noise, gearbox backlash, winding overheating, vibration, wear of bearings or gearbox lubricant	Reassembly of the gearbox, replacement of bearings, gears, winding check, sealing, CAN diagnostics and software update	Working with high-voltage elements, need for certified equipment, difficulty in checking electronics

General principles of quality repair:
– keeping the work area clean (especially for automatic transmissions and CVTs);
– using original or certified spare parts;
– complete oil change after any disassembly;
– testing on specialized stands before installation;
– software adaptation (for automatic transmissions, CVTs, manual transmissions, electric drives);
– mandatory check for tightness and absence of noise.

Transmission repair technologies for modern cars are based on accurate diagnostics, application of appropriate repair techniques and compliance with manufacturer requirements. The complexity of structures, integration with electronic control systems and high operational loads determine the need for professionalization of this type of service. Carefully performed repairs ensure reliable operation of the transmission and restore its characteristics to the factory level.

4.2.2.4 Technological equipment

Effective performance of work on diagnostics, maintenance and repair of car transmissions is impossible without the use of appropriate technological equipment. Modern transmission systems - mechanical, automatic, CVT, robotic and electric - require specialized tools, diagnostic tools and assembly and disassembly equipment.

Equipment requirements:
– compliance with the specifics of the transmission type;
– compatibility with electronic control systems (CAN, LIN, UDS protocols);
– high accuracy of measurements (pressure, temperature, torque);
– safe work with hydraulic and electrical components;
– ability to adapt, calibrate and reset ECU data.

The classification of equipment by type of work and transmission types is given in Table 4.13.

Table 4.13 – Classification of equipment by type of work and transmission types

Type of work	Transmission type	Required technological equipment
Diagnostics	All types	– OBD-II / CAN scanners (Bosch KTS, Launch, Autel) – Oscilloscopes – Sound level meters – Endoscopes – IR thermometers – Inclinometers
	AT, CVT, RT	– Diagnostic software (Techstream, VCDS, Forscan) – Solenoid tester – Hydraulic pressure analyzer – CAN loggers
	Electric drive	– EV diagnostic modules (OBDeleven, EV-Scan Tool) – Winding analyzer – Inverter tester – EV isolated multimeters
Maintenance	MT	– Oil filling units – Lubricating oil level

		monitoring devices – Grease nipples – Drive and gear pullers
	AT, CVT	– ATF partial/full replacement units (e.g. Wurth, TWT 5000) – ATF temperature tester – Washing stations – Heat exchanger test stand
	RT	– Clutch actuator tester – Electronic calibrators – Diagnostic module for gearbox adaptation
	Electric drive	– IR thermometers – EV cooling systems (gearbox fluid maintenance) – SOC/SOH controllers (battery condition at high loads)
Repair	MT	– Gearbox disassembly/assembly machine– Bearing replacement presses– Synchronizer installation devices– Backlash indicators
	AT	– Automatic transmission disassembly stand (with clamping clamp)– Clutch puller set– Hydraulic unit flushing units– Control unit adaptation stand
	CVT	– CVT pulley pullers– Belt/chain installation machine– Hydraulic unit and valve testing stand
	RT	– Electric/hydraulic actuator testing stand– Transmission ECU firmware update software– ECU connecting cables
	Electric drive	– EV-protected tool kits (1000 V insulation)– Dielectric gloves and mats– EV-lifts and stands– BMS controllers

Specific equipment for EV transmissions:
– thermal imagers – to detect local overheating of the gearbox or electric motor;
– EV HV Multimeter – high voltage multimeter with increased safety class;
– BMS software – to check the interaction between the battery pack and the gearbox/drive;
– tools for disassembling the HV gearbox – in a sealed and moisture-proof housing.
General requirements for the working space:

a) For automatic transmissions and CVTs: separate areas with increased cleanliness, dust protection;
b) For electric transmissions: insulating mats, humidity control, ventilation;
c) Oil and fluid evacuation systems: for safe draining and disposal of transmission fluids;
d) Software: updatable databases, access to OEM documentation, online calibration modules.

Technological support for transmission maintenance must meet the complexity and specifics of modern cars. Properly selected and regularly maintained equipment allows not only to ensure the quality of repairs and maintenance, but also to increase the efficiency of service centers, reduce vehicle downtime, and increase the safety of vehicle operation.

4.2.3 Car chassis

The chassis of a car is the main supporting system that unites all the components and assemblies of the vehicle into a single structure and ensures its movement, controllability, stability, comfort and safety. The chassis includes the running gear, steering, suspension, wheels, tires and brake system - that is, those elements that directly interact with the road surface and perceive dynamic loads during movement.

Given the high degree of load on the chassis elements, regular maintenance is critically important to ensure reliable operation of the car. Untimely detection of wear or malfunctions in the suspension, brake system or steering can lead not only to premature failure of the units, but also to a decrease in the level of road safety.

In modern cars, in particular cars, trucks and electric vehicles, adaptive suspension systems, electric power steering, electronic brake systems (ABS, ESP, EBD) are increasingly used, which require not only mechanical, but also electronic diagnostics during maintenance. This requires the specialist to have in-depth knowledge of the design, skills in working with electronic systems, and compliance with maintenance technologies in accordance with technical regulations.

The purpose of this unit is to familiarize candidates with modern approaches to vehicle chassis maintenance, classification of work, requirements for frequency and technology of operations, as well as with the equipment used during chassis diagnostics and maintenance.

4.2.3.1 Diagnosis

The chassis of a car, as the basis of the supporting structure, plays a key role in ensuring stability, comfort, reliability and safety while driving. The chassis elements that are subject to diagnosis (excluding steering and brakes) include:

– suspension (spring, coil spring, pneumatic, hydropneumatic, adaptive);
– fastening elements of units and assemblies;
– body supports (cushions, brackets, subframes);
– axles, beams, levers;
– shock absorbers and anti-roll bars;
– wheels and tires (balancing, wear, geometry).

Modern chassis designs vary depending on the type of vehicle transmission. For example, electric vehicles with an integrated electric drive have a different mass configuration, which affects the load on the suspension, and cars with front, rear or all-wheel drive have a specific load on the axles and chassis components.

The main tasks of chassis diagnostics:

a)Detection of mechanical wear or damage to suspension components;
b)Determination of play in joints and supports;
c)Assessment of suspension geometry and wheel position;
d)Monitoring the physical and mechanical condition of tires;
e)Detection of deformations, corrosion, cracks in chassis elements;
f)Analysis of changes in vehicle behavior under load.

Chassis diagnostic methods are given in Table 4.14.

Table 4.14 – Chassis diagnostic methods

Method	Description and scope
Visual inspection	Search for damage, cracks, signs of wear, deformations, leaks in shock absorbers, damage to rubber-metal elements.
Mechanical backlash testing	Measurement of play in the joints of levers, supports, stabilizers using mountings or special devices.
Shock absorber inspection	On a special stand or dynamically: assessment of the condition by the degree of oscillations, fluid leaks or electronic signal (for adaptive systems).
Computer suspension diagnostics	Reading the operating parameters of the adaptive or air suspension (if available), checking height sensors, valves, compressor.
Suspension geometry diagnostics (cameo-toe-in)	Using 3D stands to determine the angles of wheel installation, axle position violations, comparison with factory parameters.
Test drive or bench simulation	Assessment of the behavior of the car under load - the nature of rolls, suspension breakdowns, "goats", skews or excessive rigidity.

Features of diagnostics taking into account transmission types are given in Table 4.15.

Table 4.15 – Features of diagnostics taking into account transmission types

Transmission Type	Features affecting chassis diagnostics
MT	The most symmetrical axle load; classic layout; vulnerability of transmission mounts to loosening.
AT, RT	Increased mass of the transmission assembly - increased load on the drive axle suspension, uneven load distribution.
CVT	Sensitivity to chassis geometry due to smooth movement and high loads at start-up, especially in front-wheel drive cars.
All-Wheel Drive (AWD / 4WD)	Increased dynamic loads on both axles; difficulty in detecting chassis curvature; importance of correct transmission alignment.

Electric Drive (EV)	Unusually distributed mass (low center, high battery weight); vulnerability of mounts to deformation; influence of rigid suspension on chassis geometry.

Diagnostics of the chassis of a modern car should be comprehensive, taking into account the specifics of the drive and loads. Only regular monitoring of the condition of the suspension, supports, shock absorbers and wheels allows you to timely detect wear, prevent accidents and ensure comfort and safety of movement. Special attention should be paid to modern adaptive and electronically controlled suspension systems, which require additional software and bench analysis.

4.2.3.2 Maintenance technologies

Chassis maintenance is an important component of the operational reliability of a vehicle. In this context, the chassis includes the supporting elements of the suspension, shock absorbers, anti-roll bars, elastic elements, unit mounts, body supports, and wheel assemblies. Careful and timely maintenance of these elements prevents excessive wear, geometry violations, and reduced comfort and safety of movement.

Goals and objectives of chassis maintenance:

– preservation of the geometric parameters of the suspension;
– ensuring the correct operation of shock absorbers and elastic elements;
– detection of backlash and deformations;
– prevention of wheel imbalance;
– extending the service life of tires;
– maintaining the stability and directional stability of the vehicle.

Technological operations of chassis maintenance are given in Table 4.16.

Table 4.16 – Technological operations of chassis maintenance

Operation	Frequency (typical)	Notes
Visual inspection of suspension elements	every 10,000–15,000 km or seasonally	Especially after intensive use on bad roads
Checking/tightening threaded connections	during annual maintenance	Important for levers, subframes, shock absorber supports
Lubrication of articulated joints (if design allows)	every 20,000–30,000 km	Relevant for trucks, SUVs, special equipment
Inspection/replacement of shock absorbers	every 40,000–80,000 km	According to wear or fluid leaks
Checking the condition of springs, coil springs, air cylinders	every 20,000 km or in case of defects	For pneumatic systems - check pressure, tightness, cylinder wear
Assessing tire wear and balancing	every 10,000–15,000 km	It is important to consider replacement schemes in places to reduce uneven wear
Checking and adjusting wheel alignment angles	annually or after significant impacts	Necessary after replacing suspension parts, driving into a pothole, accident, etc.

Service features based on chassis type are given in Table 4.17.

Table 4.17 – Service features based on chassis type

Chassis type	Design features	Specifics of maintenance
Classic independent suspension	Wheel separation by axle, wide applicability in passenger cars	Easy maintenance, regular check of play of levers, bushings, silent blocks
Dependent suspension (axles)	Connection of wheels of one axle with a rigid beam; used on commercial vehicles and pickup trucks	Checking the condition of the bridge, mounts, springs, possibility of defecting wear of bushings/rods
Air suspension	Instead of springs - pneumatic	Checking pressure, tightness of

	cylinders; electronic adjustment of ground clearance	circuits, height sensors, compressor, valves
Hydropneumatic/adaptive	Maintenance of height, stiffness depending on load or road conditions	Diagnostics of electronics, fluid replacement, checking actuators, system calibration
Modular electric vehicle platform (EV)	Low center of gravity, integrated batteries, minimal running connections, adaptive suspension	More frequent inspection of components for corrosion, tightness and loss of geometry under load

Tips for organizing maintenance:

– it is recommended to carry out work with the suspension on a flat horizontal surface.

– after each major repair or accident, a camber-toe check is required.

– it is necessary to record the results of the inspections in the service documentation.

– for electronically controlled systems, a mandatory scanning of the parameters after the intervention is required.

– use only lubricants of the type recommended by the manufacturer.

Chassis maintenance is a systematic procedure that combines both simple operations (visual inspection, lubrication) and complex procedures for checking the geometry or servicing adaptive and air suspensions. Depending on the design, cars require an individual approach to chassis maintenance, which ensures not only the durability of the parts, but also driving safety, maintaining dynamic characteristics and comfort for the driver and passengers.

4.2.3.3 Repair technologies

Car chassis repair is an integral part of vehicle maintenance and involves eliminating damage or wear of suspension elements, shock absorbers, unit mounts, stabilizers, elastic elements, wheel assemblies and other components that make up the chassis structure. Timely and high-quality performance of repair operations allow you to maintain the controllability, stability, comfort and safety of the car.

General principles of chassis repair:

– restoration of the performance and geometry of assemblies and elements;

– use of certified spare parts and appropriate tools;

– restoration of fasteners, hinges, rubber-metal bushings, cushions, etc.;

– elimination of deformations and damage to load-bearing elements;

– ensuring correct installation of assemblies in accordance with the manufacturer's requirements;

– conducting a post-repair inspection of wheel installation angles.

Typical repair work is given in Table 4.18.

Table 4.18 – Typical repair work

Chassis element	Typical faults	Repair measures
Shock absorbers	Fluid leakage, reduced damping efficiency	Replacing the shock absorber or cartridge, checking the fasteners and supports
Springs / leaf springs	Fracture, metal fatigue, subsidence	Replacing damaged elements, checking the symmetry of the installation
Anti-roll bars	Worn bushings, joints, damage to rods	Replacing the bushings, rods, checking and tightening the fasteners
Suspension arms	Deformation, backlash, corrosion	Alignment (if allowed by the manufacturer) or replacing the levers, replacing the hinges and bushings
Subframes and body supports	Cracks, displacement, corrosion, geometry irregularities	Replacing or leveling on the slipway, welding work, anti-corrosion coating

Repair features depending on the chassis type is given in Table 4.19.

Table 4.19 – Repair features depending on the chassis type

Chassis type	Design features	Repair features
Classic independent suspension	Levers, springs, shock absorbers, ball joints; used in most passenger cars	Requires precise compliance with tightening torques, after replacing elements - check of camber-toe
Dependent suspension (axle)	Rigid connection of the axle to both wheels; typical for pickups, vans, SUVs	Often accompanied by welding work, requires checking of springs, bushings, axles, shock absorbers
Air suspension	Pneumatic cylinders instead of springs, electronic body level control	Requires a sealed environment for testing, replacement of cylinders, valves, compressors; system calibration is required
Hydropneumatic / adaptive	Pressurized liquid or electronically controlled shock absorbers, variable stiffness and height	Repair only with specialized equipment, replacement of electronic units, actuators, software adaptation
Modular electric vehicle platform (EV)	Flat chassis with built-in battery, rigid layout	Caution is required when working with load-bearing elements; sensitivity to loss of geometry; limited access to nodes

Quality control after repair:
– checking the wheel installation angles;
– test drive to assess stiffness, noise, stability;
– visual inspection of fasteners and tightness;
– software calibration of electronic systems (for adaptive and air suspension);
– recording the results in a service log or electronic database.

Repairing the chassis of a modern car requires a comprehensive approach, precise adherence to technology and taking into account the features of the structures. Modern chassis systems, in particular with electronic control or variable geometry, require specialized equipment and qualified personnel. Timely and high-quality repair ensures the preservation of operational characteristics, safety and comfort of movement, and also extends the service life of suspension and body components.

4.2.3.4 Technological equipment

Modern car chassis includes complex design solutions that combine mechanical, hydraulic and electronic components. Depending on the type of suspension (independent, dependent, pneumatic, adaptive, multi-link, EV-platform), specialized technological equipment is used for effective diagnostics, maintenance and repair of the chassis. Its correct selection and use significantly increases the accuracy of the operations performed, reduces maintenance time and ensures safety of work.

Basic requirements for equipment:
– accuracy of measurement of geometric and dynamic characteristics;
– compatibility with the latest electronic suspension systems;
– reliability and stability in working with heavily loaded units;
– safety for working with electric platforms;
– ability to adapt to different types of chassis.

Distribution of equipment by type of work and chassis types is given in Table 4.20.

Table 4.20 – Distribution of equipment by type of work and chassis types

Type of work	Chassis type	Technological equipment
Diagnostics	All types	– Visual diagnostic kits (mirrors, flashlights, endoscopes)– Mechanical/electronic play indicators– Thermal imagers and IR thermometers (shock absorber condition assessment)– Calipers, micrometers, feelers for gap control– Camber-toe stands (2D/3D)– Computer diagnostic systems for adaptive and air suspensions (Bosch, TEXA, Launch, Jaltest)

	Pneumatic / adaptive chassis	– CAN/LIN bus scanners– Body level calibration devices– Pressure testers in pneumatic systems– Load simulation stands for pneumatic cylinders
	EV platform	– Suspension stiffness tester– EV multimeters (high voltage)– Insulated measuring instruments– Platform distortion and deformation control systems
Maintenance	All types	– Jacks, lifts (2- and 4-post) – Torque wrenches for controlled tightening – Pump stations for lubrication of units – Wheel balancing stands – Systems for replacing elastic elements (press stands, spring retainers)
	Pneumatic chassis	– Pumps and compressors – Diagnostic adapters for the electronic unit of the air suspension – Vacuum pumps for tightness testing
	Adaptive chassis	– Software complexes for testing and calibrating shock absorbers (e.g. Audi Drive Select, Mercedes AIRMATIC) – Variable stiffness testers
Repair	All types	– Presses for pressing in/out bushings and bearings – Tools for dismantling levers, shock absorbers, springs – Sets for removing ball joints and silent blocks – Machines for processing suspension parts (if necessary) – Docking and straightening systems for supporting body elements
	EV platform	– Platforms with disconnection of HV systems (insulation equipment) – Frames for positioning during assembly – Measuring systems for deformations in case of damage to the battery compartment structure
	Pneumatic / hydropneumatic	– Cylinder pullers – Compressor stations – Stands for diagnosing valves, receivers, accumulators

Additional equipment:
– calibration stands for adaptive body height systems;
– EV-insulated tools (up to 1000 V) - when working with electric platforms;
– laser rulers and stands for checking the straightness of beams and bridges;
– scanners with 3D chassis geometry analysis - relevant for accurate recovery after an accident;
– mobile suspension testers - for checking the stiffness of shock absorbers in dynamics.
Workplace organization conditions:
– service areas must be equipped with a flat floor, traverses or ramps for access to the suspension;
– work with air and adaptive suspension is performed in special areas with humidity control and access to computer equipment;
– electric vehicles are serviced in high-security areas with mandatory protection from HV loads;
– tools and stands should be organized in accordance with the logic of the technological process (separately - diagnostics, maintenance, repair).

The selection and use of appropriate technological equipment for chassis maintenance determines the efficiency of work, its safety and quality. The development of car designs, especially the transition to electric vehicles, adaptive and pneumatic systems, requires updating the tool park, training personnel and implementing modern digital diagnostics and repair technologies.

4.2.4 Undercarriage

The undercarriage of the car is one of the most important components of the chassis, which ensures the contact of the wheels with the road, the smoothness of the movement, the stability of the vehicle, and also perceives all the dynamic loads that occur during driving. It includes a suspension, wheels, tires, shock absorbers, elastic elements, axles, beams and other components that connect the body or frame with the wheels.

In modern automotive engineering, the chassis is characterized by complex geometry, extensive use of light alloys, composite materials, as well as electronic active suspension control systems. Of particular importance are design solutions that provide adaptation to road conditions, change in ground clearance,

compensation for vibrations and stabilization of movement, which makes the system sensitive to the condition of each of its elements.

Given the high loads on the chassis components and their impact on road safety, timely maintenance is critically important. Its purpose is to identify and eliminate deviations in the operation of the suspension, shock absorbers, wheel mounting elements, elastic joints, as well as reduce tire wear and ensure proper geometry of the chassis.

This section discusses the principles and features of servicing the chassis of cars, taking into account different types of suspension (independent, dependent, pneumatic, adaptive), typical for passenger cars, trucks and electric vehicles.

4.2.4.1 Diagnosis

Tires and wheels are critical elements of the vehicle's chassis that directly provide traction, smooth ride, comfort, fuel economy, and safety. Therefore, timely diagnostics of their technical condition is a prerequisite for the effective operation of the vehicle.

Modern tire designs (low-profile, radial, Run Flat, all-season, electric vehicles with reinforced sides, etc.) and alloy wheels (with integrated pressure sensors, aerodynamic inserts, wear sensors) require not only a visual inspection, but also the use of specialized equipment for accurate diagnostics.

The main tasks of diagnostics:

– detection of tire damage and deformation;
– assessment of the uniformity and depth of tread wear;
– checking tire air pressure and tightness;
– detection of wheel imbalance;
– monitoring the condition of the rims (mechanical damage, cracks, corrosion);
– detection of alignment or runout;
– reading data from tire pressure and temperature sensors (TPMS).

Tire and wheel diagnostic methods are given in Table 4.21.

Table 4.21 - Tire and wheel diagnostic methods

Method	Description / application
Visual inspection	Detection of external damage: cuts, hernias, delaminations, cracks, uneven tread wear, cracks on discs
Tread depth check	Use of wear indicators or calipers; minimum permissible depth: 1.6 mm for passenger cars (>3 mm recommended)
Pressure check	Mechanical or electronic pressure gauges; temperature taken into account during measurement; check for valve tightness
Wheel balancing	Dynamic (on a stand) or static; eliminates imbalance that causes vibrations at speed
Disk runout check	Use of a watch-type indicator; control of radial and axial wheel runout
TPMS diagnostics (tire pressure monitoring system)	Reading signals from built-in pressure and temperature sensors (active/passive systems), control of sensor power supply
Geometric deformation testing	Special templates, laser meters; relevant after impacts or accidents
Wear pattern analysis	Allows detection of camber-toe violations, uneven loading, suspension defects
Method	Description / application

Tire wear analysis is the process of assessing the nature, degree, and distribution of tread wear to determine the technical condition of tires and identify malfunctions in the suspension, wheel geometry, steering, or operating conditions. It allows not only to prevent premature tire replacement, but also to timely detect violations in the technical condition of the vehicle.

Main parameters to be analyzed:

– tread depth across the entire width of the tire;
– wear uniformity (uniform wear of the inner, central, and outer segments);
– presence of local damage: bald spots, delamination, cracks;
– type of wear pattern (wave, flat, serrated);

– wear side — inner, outer, symmetrical.

The classification of tire wear types and their diagnostic value are given in Table 4.22.

Table 4.22 – The classification of tire wear types and their diagnostic value

Wear type	Signs	Possible cause	Recommendations
Edge wear (both sides)	The center of the tread is less worn	Low tire pressure	Check pressure, adjust according to manual
Center wear	The center area is more worn	Over-inflated tire pressure	Reduce pressure to recommended level
Inner or outer edge wear	Only one side of the tire is worn	Improper camber-toe	Adjust wheel alignment
Spotted (cam) wear	Uneven areas of wear in the form of "potholes"	Imbalance, faulty shock absorbers, warped rims	Balancing, suspension check, shock absorber replacement
Wave (sawtooth) wear	The tread surface has transverse waves	Faulty shock absorbers, axle warping	Check shock absorbers, degrees of freedom, axle deflection
Shoulder wear (one-sided)	Wear on one shoulder of the tire	Wheel camber (camber)	Adjust camber
Ginger wear	The tread has a jagged surface when you run your hand over it	Inconsistent rear and front axle operation, suspension problems	Balancing, check rear axle and lever bushings
Non-cyclic wear	Unclear combination of different types	Excessive load, poor-quality tires, aggressive driving style	Analysis of operating conditions, possible tire replacement

Sequence of tire wear analysis:

a) Preparation:

1.wash the tire surface;

2.place the vehicle on a horizontal surface.

3.visual inspection:

4.assess the level of wear visually (compare all tires);

5.check the symmetry of the tread pattern.

b) Measuring the tread depth:

1.using a caliper or a depth gauge at 3 points: outer, central and inner segments;

2.the minimum permissible tread depth for passenger cars is 1.6 mm, but it is recommended to be at least 3 mm.

c) Checking tire pressure:

1.with a pressure gauge, at an ambient temperature of no higher than 20–25°C;

2.the manufacturer's recommendation is taken into account (most often 2.2–2.6 atm for passenger cars).

d) Assessing the nature of wear:

1.compare the left and right wheels of the same axle;

2.if necessary, carry out balancing or a geometric check of the chassis.

Features of tire analysis of modern cars:

– electric cars and hybrids: due to greater weight and torque on the wheels, tire wear occurs faster; inspection is recommended every 5000–7000 km;

– run Flat tires: the appearance may not change with internal damage - the use of internal inspection and special diagnostic stands is mandatory;

– low-profile tires: sensitive to wheel beating and deformation; require more frequent balancing;

– tires with wear indicators: built-in rubber protrusions or colored inserts that appear when critical wear is reached.

Tire wear analysis is not only an assessment of the suitability of tires for further operation, but also a source of valuable information about the technical condition of the suspension, wheel balancing, and driving style. Regular analysis reduces vehicle maintenance costs, increases vehicle safety, and extends tire life.

4.2.4.2 Maintenance technologies

Maintenance of car tires and wheels is a set of regulated procedures aimed at ensuring their serviceability, safe operation, optimal road grip and durability. With the development of tire designs (low-profile, Run Flat, all-season, tires for electric vehicles) and wheels (alloy, with TPMS sensors, aerodynamic inserts, etc.), maintenance technologies have become significantly more complicated and require a qualified approach, specialized tools and compliance with technical regulations.

Basic tire and wheel maintenance operations:

– inspection of tires and wheels for damage;
– monitoring and adjusting air pressure;
– measuring tread depth;
– balancing wheels;
– checking the tightness of rims, valves and tire fit;
– seasonal tire replacement with observance of the direction of rotation;
– tire rotation for even wear;
– TPMS (Tire Pressure Monitoring System) maintenance;
– calibration after maintenance (for cars with TPMS or adaptive chassis).

Features of maintenance of tires and wheels of modern cars are given in Table 4.23.

Table 4.23 – Features of maintenance of tires and wheels of modern cars

Type	Construction / operation features	Special requirements for maintenance
Run Flat (RFT)	Reinforced sidewalls allow pressure-free movement	Mandatory check of the condition of the inner frame, only special assembly stands
Low Profile	Reduced lateral force, susceptibility to damage	Careful dismantling, frequent check of wheel geometry
EV Tires	Increased load, reduced rolling resistance	Reinforced sidewall, special treads; careful balancing
TPMS-equipped	Pressure sensors in the wheel or on the rim	Caution during dismantling, replacement/calibration after maintenance
Alloy Wheels	Lightweight, prone to deformation	Avoid shock installation, check for microcracks
Aero Wheels	Reduced air resistance, additional pads	Dismantling with protection of inserts, mandatory cleaning from dirt

Typical sequence of tire and wheel maintenance

1. Preparation for maintenance
   –The car is fixed on a horizontal surface;
   –The tire temperature is checked (should not exceed +30 °C);
   –Equipment: jack, wrench, tire mounting stand, balancing stand, pressure gauge, depth gauge.
2. Dismantling and inspection
   –The wheels are carefully dismantled;
   –A visual inspection of the tread, sidewalls, valve, disc is carried out;
   –The presence of cracks, cuts, hernias, deformations is assessed.
3. Tread pressure and depth control
   –The pressure is checked with a pressure gauge (compared to the manufacturer's recommendations);
   –The tread depth is measured at three points on each wheel;
   –If necessary, adjust the pressure according to the load (front/rear).
4. Wheel balancing
   –The wheel is installed on a balancing stand;
   –The magnitude and location of the imbalance are determined;
   –Balancing weights (glued or clip-on) are installed;
   –For EV tires, dynamic balancing is performed with high accuracy.
5. TPMS maintenance

Reading the signal from the sensor;
   –Checking the battery, valve tightness;

–If necessary, replacing seals or calibrating the sensor via the OBD2 interface.

6. Tire rotation. Performed according to the recommended scheme:
   –for non-directional tires: front → rear, crosswise;
   –for directional tires: only front/rear without crosswise movement;
   –in all-wheel drive cars - rotation between all wheels according to the instructions.
7. Installation and tightening
   –The wheels are installed with preliminary cleaning of the disk and hub;
   –Tightening of bolts is performed with a torque wrench (according to standards, usually 100–140 N m).

The frequency and conditions for performing tire and wheel maintenance are given in Table 4.24.

Table 4.24 – The frequency and conditions for performing tire and wheel maintenance.

Operation	Frequency / condition
Visual tire inspection	Monthly or before each trip
Pressure check	Every 2–3 weeks or before a long trip
Tread measurement	Every 10,000 km
Wheel balancing	When installing new tires, every 15,000–20,000 km
Tire rotation	Every 10,000–15,000 km
TPMS check	When replacing tires or when a warning appears on the instrument panel
Geometry measurement (camber-toe)	When the tires are worn at the edges or after an impact/accident

Tire and wheel maintenance is a critically important part of vehicle operation, directly affecting safety, handling and economy. Given the complex design of modern tires and wheels, each operation must be carried out in compliance with technological requirements and using appropriate tools and equipment. Neglecting maintenance procedures reduces tire life, increases the risk of accidents and leads to increased costs.

4.2.4.3 Repair technologies

Repair of car tires and wheels is a set of technological operations aimed at restoring their performance, tightness, geometric correctness and safety of further operation. With the increase in the number of design variations of tires (Run Flat, low-profile, electric vehicles, with reinforced sidewalls) and wheels (alloy, sensor, aerodynamic), repair technologies have also become more complicated, requiring special equipment, qualified personnel and strict adherence to standards.

The classification of tire and wheel repairs is given in Tables 4.25 and 4.26, respectively.

Tables 4.25 – The classification of tire repairs

Repair type	Description	Typical damage
Cold repair	Using cold patches, molds without heating	Small punctures (up to 6 mm), cracks, micro-punctures
Hot repair	Vulcanization at temperatures of 100–150°C	Deep cuts, delamination, cord damage
Combined repair	Combining patch and mold	Angle punctures, through-and-through damage
Beam/inner part repair	Restoring the tightness or carcass of the tire	Damage due to landing, cracks in the sidewall
Tread restoration (regrooving)	Cutting a new pattern on the remaining tread	Truck tires with preserved carcass
Rim sealing restoration	Surface treatment or installation of sealing tape	Air leakage from the rim or valve

Tables 4.26 – The classification of wheel repairs

Repair type	Description	Typical defects
Disk dressing	Mechanical alignment for deformations	Radial/axial runout
Crack welding	Argon arc or plasma welding	Rim cracks, spider webs
Surface restoration	Grinding, painting, anodizing	Corrosion, scratches, oxidation
Valve replacement	Installation of a new valve or TPMS module	Valve damage, air leakage
Balancing after repair	Elimination of imbalance after straightening	Restoration of dynamic balance

Table 4.27 shows the features of repairing modern tires and wheels.

Table 4.27 – The features of repairing modern tires and wheels

Tire/Wheel Type	Repair features	Limitations / warnings
Run Flat	Only cold repair is allowed, the condition of the frame is strictly controlled	Not repairable after long-term running without pressure
Low Profile	Require delicate dismantling/installation, risk of damage to the sidewalls	Damage to the sidewall is usually not repairable
Tires with TPMS sensors	Dismantle with caution, calibrate the sensor after installation	Damage to the sensor → replacement, repair is not allowed
Alloy wheels	Only subject to light welding, painting - powder or anodizing	Deformation more than 3 mm - replacement
Aerodynamic inserts	Dismantle only manually with soft nozzles	The use of steel mountings is prohibited

Technological sequence of tire repair (using the example of cold repair):

a)Inspection of damage: the type of defect is determined (puncture, cut, hernia, delamination);
b)Marking the defect location: with chalk or marker;
c)Disassembling the tire: using a tire fitting stand;
d)Cleaning and grinding the inner surface;
e)Applying activator and glue (if necessary);
f)Gluing the patch or fungus in compliance with the technology;
g)Pressing and holding: to ensure sealing;
h)Pressure control: checking for tightness after installation;
i)Wheel balancing.

Quality control after repair:

a)Visual inspection of the repair;
b)Checking for tightness (immersion in a bath or pneumatic test);
c)Balancing control;
d)Checking the functionality of the TPMS sensor;
e)Making an entry in the service documentation.

Restrictions on tire repair:

1.Damage to the sidewall exceeding 15% of the height - not repaired;
2.Deep cuts > 6 mm in the shoulder area - repair is prohibited;
3.Cracks in the carcass - subject to replacement;
4.Tires that have been operated without pressure (especially RFT) - only for the consideration of a specialist with appropriate certification.

Repair of tires and wheels of a modern car is a high-tech process that requires strict adherence to technology, taking into account the type of tire/rim design, as well as the use of appropriate equipment. Improper repair can cause dangerous situations on the road. Therefore, to ensure the safety and economy of vehicle operation, repairs should be carried out only in certified services with qualified personnel.

4.2.4.4 Technological equipment

Modern tires and wheels have a complex design: reinforced sidewalls, pressure sensors (TPMS), low profile, special aerodynamic elements, reinforced carcasses (Run Flat), alloy or forged wheels, etc. Therefore, maintenance, diagnostics and repair require appropriate technological equipment that allows work to be performed without damaging the elements and in compliance with safety standards.

Basic equipment requirements:

–safe and accurate work with sensitive elements (TPMS sensors, aerodynamic pads);

–compatibility with large wheel sizes of electric vehicles and crossovers;

–support for low-profile and Run Flat tires;

–automation of processes to reduce the human factor;

–ability to process alloy wheels without damaging the coating.

An approximate list of equipment required for diagnostics, maintenance and repair of tires and wheels is given in Table 4.28.

Table 4.28 – An approximate list of equipment required for diagnostics, maintenance and repair of tires and wheels

Equipment name	Purpose	Features of use
Diagnosis		
Electronic pressure gauge	Tire pressure measurement	High accuracy; for tires with TPMS, preferably with a reading function
Tread depth gauge (digital or mechanical)	Determination of residual groove depth	Required for each tread zone
Axial/radial runout indicator	Rim deformation control	Mounted on a rack, measures deviations in mm
TPMS scanner/programmer	Diagnostics of pressure, temperature and sensor battery condition	Interacts with CAN bus or Bluetooth TPMS
Balancing stand (with disc diagnostics function)	Determination of imbalance and runout	Modern models have 3D cameras and laser positioning
Maintenance		
Tire changing stand	Tire removal and installation	For RFT and low profile tires, models with an auxiliary arm and rim protection are required
Hydraulic/pneumatic jacks	Lifting the vehicle to remove the wheels	Important for electric vehicles - lifting at checkpoints
Torque wrenches (electric or pneumatic)	Tightening fasteners with precise force	Avoid dragging alloy wheels
Tire rotation stand	Ensuring even wear	Automated modules for premium tires
Wheel washing stand	Cleaning before balancing or repair	Water + high pressure + detergents
Tire changing stand	Tire removal and installation	For RFT and low profile tires, models with an auxiliary arm and rim protection are required
Repair		
Cold repair unit	Patching, fungus, sealing	Working with the inner tube, vulcanization quality control
Vulcanizer (manual or automatic)	Hot gluing of patches	For professional repair of frame damage
Disk straightening machine	Elimination of axial and radial runout	Models with digital deformation indicator
Argon arc welding machine	Repair of cracks in alloy wheels	Experience with aluminum alloys required
Grinding and polishing machines	Restore the surface of the wheel	After welding or corrosion removal
Test baths / pneumatic stands	Checking the tightness of the tire after repair	Overpressure + soap solution control
Equipment for working with TPMS		
TPMS scanner (ATEQ, Autel,	Reading parameters TPMS	–

Equipment name	Purpose	Features of use
Bartec)	scanner (ATEQ, Autel, Bartec)	
TPMS programmer (universal or branded)	Programming a new sensor TPMS programmer (universal or branded)	–
OBD2 adapter with appropriate software	Calibrating the system OBD2 adapter with the appropriate software	–
TPMS tester or function in the scanner	Checking the sensor battery TPMS tester or function in the scanner	–
Set of special tools for TPMS	Replacing the valve with the sensor Set of special tools for TPMS	–

Workplace organization requirements:

–Ventilated area with limited dust and dirt (for accurate balancing);

–Dismantling / repair / installation areas must be isolated;

–Availability of a diagnostic computer with databases on sizes, pressures and tightening torques for different brands;

–Protective screens and rubber elements on the contact surfaces of tire fitting equipment.

Taking into account the development of tire and wheel designs of modern cars, service enterprises must be equipped with appropriate technological equipment that allows for high-quality and safe diagnostics, maintenance and repair. Particular attention should be paid to the compatibility of equipment with Run Flat tires, TPMS sensors and alloy wheels. The use of specialized equipment is the key to extending the life of wheels and road safety.

4.2.5 Management systems

Vehicle control systems are critically important components that ensure traffic safety, vehicle stability, its predictability on the road and the ability to respond to driver actions in a timely manner. The control systems primarily include the steering and braking systems, which are responsible for changing the direction of the vehicle and for slowing it down or stopping it completely.

With the development of automotive engineering, these systems have become significantly more complicated, integrating electronic elements, sensors, amplifiers and automated functions. Modern steering is represented by hydraulic, electro-hydraulic and electromechanical amplifiers, and braking systems - by ABS, EBD, ESP, adaptive braking and parking assistants. This puts forward new requirements for their maintenance, diagnostics and repair.

The purpose of this section is to familiarize yourself with the principles of maintenance of vehicle control systems, including design characteristics, typical malfunctions, diagnostic methods, modern maintenance technologies and requirements for technical equipment. Particular attention is paid to approaches to servicing modern systems used in passenger cars, commercial vehicles and electrified vehicles.

Understanding the features of the functioning and maintenance of control systems is the key to ensuring a high level of safety, efficiency and reliability of vehicle operation in real road conditions.

4.2.5.1 Steering

Car steering is a system that provides a change in the direction of movement of the vehicle by turning the steering wheels. In modern cars, this system has become not only a mechanical control element, but also a complex electromechanical and software-controlled complex that adapts to speed, road conditions, load and driving style.

The main types of steering systems of modern cars are given in Table 4.29.

Table 4.29 – The main types of steering systems of modern cars

Steering system type	How it works	Advantages	Disadvantages / limitations	Applications
Mechanical	The power from the steering wheel is transmitted directly through the mechanism and linkages	Reliability, simplicity, low cost	High steering effort, inconvenient at low speeds	Commercial vehicles, trailers, old vehicles
Hydraulic power steering (HPS)	A hydraulic pump creates pressure that helps turn the wheels	Less steering effort, smoothness	Constant engine load, fuel consumption, need for hydraulic system maintenance	Most cars from 1990–2010
Electro-hydraulic power steering (EHPS)	The hydraulic system is powered by an electric motor instead of an internal combustion engine	Energy efficiency, stable operation at variable speeds	Complex design, vulnerable to electrical faults	Transitional models, passenger cars
Electro-mechanical power steering (EPS)	An electric motor on a shaft or rack helps turn the steering wheel; controlled via an ECU	Reduced fuel consumption, integration with ESP/ADAS, variable effort	More expensive to maintain, sensitive to electrical issues	The vast majority of modern cars
Steer-by-wire	Full electronic command transmission without mechanical linkage	Flexible settings, less weight, automation	High complexity, need for redundancy, limited application	Premium cars, new generation electric vehicles

The elements of modern steering are given in Table 4.30.

Table 4.30 – The elements of modern steering

Element	Function / purpose
Steering column	Transmission of torque; can be telescopic, with shock absorption
Steering mechanism	Usually rack type – provides traction movement
EPS electric motor	Generates force that enhances steering rotation
Rotation angle, torque, speed sensors	Transmits data to the EPS control unit
Power steering control unit (ECU)	Analyzes signals and controls the electric booster
Integration systems	Interacts with stabilization systems (ESP, ABS, ACC, LKA)

Modern steering systems are a combination of high-precision mechanics, electronics, and software. They contribute to increased safety, comfort, and vehicle controllability, but require more attention to diagnostics, proper maintenance, and specialized repair equipment.

4.2.5.1.1 Diagnosis

The steering of a modern car is a complex system that combines mechanical components (steering rods, rack, joints), hydraulic or electromechanical amplifiers, as well as numerous electronic sensors and control units. The reliability of its operation directly affects traffic safety, so diagnosing the steering system is a mandatory element of maintenance.

Diagnostics purpose:

–Detection of wear or malfunctions of the steering mechanism and its elements;
–Checking the condition of the power steering (GPC, EHPS, EPS);
–Evaluation of the operation of electronic control systems;
–Prevention of premature wear of tires and other chassis units;
–Ensuring the correct geometry and directional stability of the car.

Common signs of steering system malfunctions:

–Steering wheel play;
–Excessive or uneven steering effort;
–Extraneous noises when turning;
–Unintentional wheel spin;
–Vehicle instability on a straight line;
–Fluid leaks (for GPC or EHPS);
–Warning messages on the dashboard (EPS, TPMS, ADAS).

Diagnostic stages:

1. External inspection:
–Checking the tightness of hydraulic lines;
–Visual assessment of the condition of steering rods, hinges, boot liners;
–Checking the condition of the steering wheel, lock, steering column adjustment.
2. Assessment of backlash and gaps:
–Using a backlash meter or a watch-type indicator;
–Comparing the measured backlash with permissible standards;
–Assessment of the stiffness and wear of hinges and bushings.
3. Computer diagnostics:
–Connection to OBD-II port via diagnostic scanner;
–Reading fault codes (DTC) from EPS unit;
–Analysis of sensor data: steering angle, effort, wheel speed;
–Functionality check: steering wheel adaptation, zero calibration, ESP/ADAS communication check.
5. Geometry check:
–Performed on 3D or laser stand;
–Control of toe-in, pivot angle, camber, caster;
–Recommended after intervention in the steering system or in case of tire wear.

Power steering diagnostic methods are given in Table 4.31.

Table 4.31 – Power steering diagnostic methods

System type	Inspection methods
Hydraulic power steering (HPS)	Checking the level and condition of the fluid, operating pressure in the system (with a pressure gauge), inspecting the pump and hoses for noise, vibration, leaks
Electro-hydraulic power steering (EHPS)	Checking the operation of the electric pump drive, reading error codes via OBD-II
Electro-hydraulic power steering (EPS)	Reading EPS error codes via a scanner; checking the operation of torque and speed sensors; analyzing the operation of the electric motor

Features of diagnosing electronic systems

–In EPS and Steer-by-Wire systems, software plays an important role: firmware updates are required, adaptation after component replacement;
–Common errors are loss of calibration, electric motor overload, breaks in power circuits;
–Specialized software is required for calibration and adaptation (for example, Bosch, Delphi, Autel, Launch).

A modern steering system requires comprehensive diagnostics, which combines mechanical control, hydraulic testing, as well as in-depth electronic diagnostics. Performing diagnostics taking into account the type of steering mechanism, design features and modern service standards is the key to timely detection of malfunctions and ensuring safe operation of the vehicle.

4.2.5.1.2 Maintenance technologies

Steering systems of modern cars require systematic maintenance, which ensures their reliability, control accuracy, safe behavior of the vehicle on the road and preservation of the geometric parameters of the chassis. The features of maintenance are determined by the type of amplifier (hydraulic, electro-hydraulic or electromechanical), the design of the steering mechanism (rack, worm, etc.), as well as the degree of integration with other control systems (ESP, ADAS, LKA).

The main objectives of maintenance

–maintaining the working condition of mechanical connections, steering mechanism and hinges;
–ensuring the tightness and reliable operation of the hydraulic or electronic power steering system;
–checking and adjusting parameters that affect driving safety (steering wheel free play, play, steering angle);
–detecting early signs of wear to prevent accidents;
–prevention of corrosion, leaks, overheating and software failures.

A list of typical steering maintenance operations is given in Table 4.32.

Table 4.32 – A list of typical steering maintenance operations

No.	Operation	Periodicity	Notes
1	Checking and eliminating steering play	At each MOT	Using a backlash indicator
2	Inspection of the condition of steering rods, joints, and boot liners	PM-1, PM-2, seasonal PM	Visual inspection, lubrication if necessary
3	Checking the level and condition of the working fluid in the HPC / EHPS system	Every 10–15 thousand km or according to regulations	Replacement – every 40–60 thousand km or if properties deteriorate
4	Inspection of the condition and tension of the HPC pump drive belt	Every 15 thousand km	If there is noise – check the pulley and pump
5	Computer diagnostics of EPS	Every PM or when errors appear on the panel	Check DTC codes, calibrate the steering angle sensor
6	Checking the steering wheel rotation force	Once every 20–30 thousand km	Performed with a dynamometer or manually
7	Checking the tightness of connections and the absence of noise	At each visual inspection	Especially relevant for GPC and EHPS
8	Checking and, if necessary, calibrating the steering angle and torque sensors	Once every 30–40 thousand km or after repair	Through the OBD2 interface

Features of maintenance of steering systems depending on the type of amplifier are given in Table 4.33.

Table 4.33 – Features of maintenance of steering systems depending on the type of amplifier

Power steering type	Maintenance operations	Special notes / notes
Hydraulic power steering (HPS)	– Checking the level and condition of the hydraulic fluid – Inspecting hoses, fittings, and connections for leaks – Replacing or cleaning the filter – Assessing the tension and condition of the drive belt – Checking the pump noise	It is necessary to use the fluid recommended by the manufacturer; regular inspection - every MOT
Electro-hydraulic power steering (EHPS)	– All operations as for the GPC – Pump motor diagnostics – Inspecting contacts and connectors – Checking power supply, diagnosing errors using a scanner	Special attention should be paid to the serviceability of the power supply and the condition of the insulation of

		the wires
Electro-hydraulic power steering (EPS)	– Visual inspection of the electric motor and fasteners – Reading error codes via OBD-II – Checking the steering angle, torque, and speed sensors – Calibration after repair or replacement – Testing adaptive functions	For full maintenance, diagnostic software is required; regular calibration is a key condition

Regular steering maintenance is essential for safe driving, stable roadholding and long-lasting chassis components. Given the complexity of modern steering systems, maintenance should combine traditional mechanical checks with electronic diagnostics using appropriate equipment and software. Electric power steering (EPS) systems, which are becoming standard on most modern vehicles, require special attention.

4.2.5.1.3 Repair technologies

The steering system of a car, as a critical safety element, requires not only regular maintenance, but also timely detection and elimination of malfunctions through current or major repairs. In modern cars, this system has become more complex, combining mechanical components with electronic components and intelligent modules. Therefore, steering repair requires not only knowledge of classical mechanics, but also skills in working with electronics and diagnostic software.

The main steering faults are listed in Table 4.34.

Table 4.34 – The main steering faults

Component	Typical faults
Steering mechanism (rack, worm)	Gear pair wear, backlash, jamming, oil leakage
Steering rods, tips	Hinge wear, backlash, boot damage
Power steering (PS)	Fluid leaks, pump noise, pressure regulator malfunction
Electric power steering (EPS)	Electric motor failure, sensor errors, overheating or wiring break
Electronics	Torque and angle sensor failure, no communication with ECU

Types of repairs:

a) Current repairs;
- –Elimination of local defects without dismantling the entire system;
- –Replacement of individual worn elements (tips, boots, clamps, fluids);
- –Adjustment of backlash, belt tension, tightening of fasteners;
- –Software reset of errors or adaptation of electronic components.

b) Medium repairs;
- –Partial disassembly of the steering mechanism (for example, racks) to replace seals, bushings, bearings;
- –Replacement of the EPS hydraulic pump or electric motor;
- –Restoration of tightness of the steering lines;
- –EPS/ECU software update (if necessary).

c) Major repairs;
- –Complete revision of the steering mechanism, grinding or replacement of shafts, teeth, bearings;
- –Complete replacement of the electric booster or electronic module;
- –Re-soldering of boards and replacement of components (only in specialized workshops);
- –Full adaptation and calibration via service software.

Repair features depending on the type of amplifier are given in Table 4.35.

Table 4.35 – Repair features depending on the type of amplifier

Power steering type	Repair features
Hydraulic power steering (HPS)	Requires complete sealing of the system after repair; cleanliness is important when working with the pump and spools; requires pumping
Electro-hydraulic power steering (EHPS)	Repair is similar to the GPC, but with additional control of the power supply and electric motor

Electro-electric power steering (EPS)	Repair requires access to the control module, check of the loops, coding and calibration. Replacement of the unit as a whole is possible. Service access is mandatory

Repair of steering systems of a modern car requires high qualification, special equipment and access to electronic documentation of the manufacturer. Due to the integration of electronic safety systems and automatic control, it is advisable to resort to regulated procedures, adhering to service standards. Restoration of steering performance directly affects traffic safety, therefore any repair should be completed with diagnostics and a test drive with checking the behavior of the car.

4.2.5.1.4 Technological equipment

The development of automotive steering mechanisms designs — from classic mechanical and hydraulic systems to complex electromechanical (EPS) and steer-by-wire — requires appropriate specialized technological equipment for their maintenance, diagnostics, and repair. The integrated use of such equipment allows for high-precision control of technical condition and promptness of repair work.

The technological equipment required for diagnosing, maintaining and repairing vehicle steering systems is given in Table 4.36.

Table 4.36 – The technological equipment required for diagnosing, maintaining and repairing vehicle steering systems

Purpose	Equipment / tool type	Functions and purpose	Application to systems
Diagnostics	OBD-II scanners (Bosch, Launch, Autel, Delphi, OEM)	Reading EPS errors, analyzing torque, angle, and speed sensor parameters	EPS, steer-by-wire
	Multimeters, oscilloscopes	Checking supply voltage, diagnosing sensors	EPS, EHPS
	Stand for checking steering play	Measuring steering free play, detecting mechanical wear	All types
	Manometer with adapters	Measuring pressure in the GPC system	HPS, EHPS
	Stand for 3D or laser diagnostics of camber-toe	Geometric control of the position of the steered wheels	All types
	CAN-bus testers / analyzers	Detecting breaks and errors in the control electrical network	EPS, steer-by-wire
Maintenance	Belt tension tester	Control of the tension of the hydraulic pump drive belt	HPS, EHPS
	Vacuum fluid changer	Replacing hydraulic fluid without air entering the system	HPS, EHPS
	Hydraulic system flushing unit	Cleaning the hydraulic system from dirt, sediment, old fluid	HPS
	Jacks, stands, axle lift trolleys	Access to steering system components during maintenance	All types
	Calibration adapters and software for EPS	Adaptation, error reset, sensor settings	EPS, steer-by-wire
	CAN adapters, scanners (Launch, Bosch, etc.)	Reading error codes, power steering parameters	EPS, EHPS, steer-by-wire
Repair	Stand for disassembly / assembly of steering racks	Provides fixation of the steering mechanism during disassembly and reassembly	All types

Purpose	Equipment / tool type	Functions and purpose	Application to systems
	Sets of pullers, presses, mandrels	Dismantling of bearings, bushings, oil seals; installation of new elements	HPS, EHPS, EPS
	Stand for testing repaired steering racks	Simulation of the mechanism under load, checking forces, tightness	HPS, EHPS, EPS
	Steering torque tester	Determination of the forces required to rotate the steering wheel, inspection after repair	EPS, steer-by-wire
	Electronic steering simulators / EPS	Checking electric power steering without installing it in the car	EPS
	CAN-bus testers / digital diagnostic modules	Checking the connection of electronic components, testing sensors, communication with the ECU	EPS, steer-by-wire
	Soldering stations, IR soldering stations	Restoring contacts, replacing SMD components on control boards	EPS, steer-by-wire
	OEM / universal software	Coding, adaptation, updating the software of control units	EPS, steer-by-wire
	GPC fluid pressure tester	Checking the pressure in the power steering system after replacing the pump or hoses	EPS, steer-by-wire
	HPS flushing unit	Cleaning the system after repair from chips, sediment, and old fluid residues	HPS, EHPS

Technological equipment used to service steering systems must meet the level of complexity of modern car designs. Effective diagnostics, maintenance and repair are impossible without the use of integrated solutions - from mechanical stands to digital complexes with CAN-bus and Bluetooth diagnostics support. High-tech equipment allows you to accurately identify malfunctions, reduce repair time and ensure a high level of vehicle safety.

4.2.5.2 Brake systems

The brake system is one of the key elements of active vehicle safety. It provides effective deceleration, stopping of the vehicle, and holding it in place under various operating conditions. Reliability and stability of the brake system are critically important for the safety of the driver and passengers, as well as for other road users.

With the development of automotive technology, brake systems have undergone significant changes. Modern cars and trucks are equipped with multi-component brake systems, which include:

–disc and drum mechanisms;
–anti-lock braking systems (ABS);
–electronic brake force distribution (EBD);
–emergency braking systems (BAS);
–adaptive brake complexes with electric drive (EPB) and hill hold systems (HHC);
–in the most modern models - intelligent electro-hydraulic or electromechanical brake-by-wire systems.

In the context of the widespread introduction of electrified transport, as well as hybrid technologies, the role of regenerative braking, which is combined with the traditional friction system, is growing.

Maintenance of a modern brake system involves not only checking the physical condition of brake pads, discs, calipers and brake pipes, but also regular diagnostics of electronic units, wheel speed sensors, pressure controllers and software modules.

The purpose of this section is to provide students with systemic knowledge of the structure, principles of operation, typical malfunctions and routine maintenance operations of automobile brake systems. Particular attention is paid to the technologies for servicing classic brake mechanisms, modern electronic braking assistance systems, as well as methods for diagnosing and adjusting components, taking into account the design and functional features of the latest car models.

4.2.5.2.1 Diagnosis

The car's brake system is one of the most important safety elements that requires constant monitoring and timely maintenance. Due to the complexity of the design of brake systems - from conventional hydraulics to electronic brake-by-wire systems - the need for comprehensive diagnostics has increased, which includes mechanical, hydraulic, pneumatic and electronic elements.

The purpose of diagnostics is to promptly detect malfunctions, reduced efficiency or deviations in the operation of the brake system before the occurrence of emergency and dangerous situations.

Main tasks:

–determination of the technical condition of braking mechanisms;
–assessment of the effectiveness of the operating, parking and emergency systems;
–detection of malfunctions in electronic systems (ABS, EBD, ESP, EPB, etc.);
–checking the condition of the brake fluid and the tightness of the lines;
–assessment of wear of brake pads, discs, drums;
–reading error codes and parameters in real time.

Basic diagnostic methods

a) Visual and contact inspection

–checking the level and color of the brake fluid;
–inspecting the calipers, hoses and pipes for leaks;
–checking the thickness of the pads and discs;
–assessing the brake pedal travel;
–inspecting the electric drive elements (in EPB, brake-by-wire systems).

b) Mechanical diagnostics

–measuring the thickness of the friction elements;
–checking the axial play of the brake drums or discs;
–checking the friction pairs for overheating, warping or scoring.

c) Hydraulic and pneumatic inspection

–checking the tightness of the system under pressure;
–checking the operation of the master brake cylinder;
–checking the pressure in the circuit (in hydropneumatic systems, ABS);
–bleeding the brakes to detect air in the system.

d) Electronic diagnostics

Performed using OBD-II scanners and specialized diagnostic programs.

–reading error codes in ABS, ESP, EBD, EPB units;
–analyzing signals from wheel rotation, pressure, pedal position sensors;
–testing the operation of electric parking brake actuators;
–calibrating units after replacing brake components;
–starting self-diagnosis through the car's service menu.

5. Bench diagnostics (on roller or inertial stands):

–assessment of braking efficiency along the axes;
–measuring uneven braking forces;
–testing the parking brake system;
–checking the operating time of electronic components.

Features of diagnostics of brake systems of modern cars are given in Table 4.37.

Table 4.37 – Features of diagnostics of brake systems of modern cars

System type	Diagnostic features
ABS / EBD	Checking the health of wheel rotation sensors, analyzing the functioning of pressure regulators, checking CAN bus connections
ESP / ESC	Additional checking of steering angle sensors, lateral acceleration, braking of

	individual wheels
EPB (Electronic Parking Brake)	Reading EPB block error codes, checking the traction drive (engine-sector), monitoring the electric drive stroke, manual unlocking
Brake-by-wire	Checking actuators, electronic control units, battery and backup power status, pressure in hydraulic accumulators
Regenerative braking	Analysis of the consistency of the electric motor and friction brakes, monitoring the electronic force distribution interface

The modern system of diagnostics of car brake systems is a combination of classical mechanical control methods with high-precision digital technologies. Thanks to intelligent electronic modules of the brake system, it is possible not only to diagnose malfunctions, but also to warn about them before the appearance of critical symptoms. The competent use of diagnostic equipment allows not only to ensure safe operation of the vehicle, but also to optimize the costs of repair and maintenance.

4.2.5.2.2 Maintenance technologies

Maintenance of the brake system is an important part of vehicle operation, which directly affects road safety. Modern brake systems include mechanical, hydraulic, pneumatic and electronic components, each of which has its own characteristics in maintenance.

Taking into account the design diversity of modern brake systems (ABS, EBD, ESP, EPB, brake-by-wire, regenerative systems), maintenance involves both routine mechanical operations and electronic and software actions (for example, calibration or resetting error codes).

Basic maintenance operations

a) Visual inspection and assessment of the condition of components:
- –checking the level, color and transparency of the brake fluid;
- –inspection of brake hoses and lines for cracks, swelling or leaks;
- –checking the wear of brake pads and discs (thickness, even wear);
- –checking the handbrake mechanism (EPB or mechanical);
- –visual assessment of the condition of the wiring and connectors of ABS/ESP sensors.

b) Periodic replacement of brake fluid:
- –replacement is carried out in accordance with the regulations (usually every 2 years or 40–60 thousand km);
- –using the appropriate fluid (DOT 3, DOT 4, DOT 5.1 or specified by the manufacturer);
- –carrying out pumping to remove air from the circuit;
- –in the case of EPB - activating the service mode before maintenance.

c) cleaning and lubrication
- –cleaning calipers, guides, disc and pad seating surfaces;
- –lubrication of guide calipers with high-temperature grease;
- –treatment of exposed metal surfaces with anti-corrosion compound (if necessary).

d) Adjustment of mechanical components:
- –tightening of hand brake cables (in mechanical systems);
- –checking and adjusting drum-type parking brakes (automatic or manual);
- –in the case of EPB - initialization after MOT using the diagnostic interface.

e) Electronic maintenance:
- –resetting brake service indicators after replacing pads;
- –checking the status of ABS/ESP/EPB systems using OBD-II;
- –software adaptation of new sensors or units (in brake-by-wire or EPB systems);
- –carrying out automatic "exit from service mode" procedures.

Features of maintenance of pneumatic brake systems

Pneumatic brake systems are used mainly in heavy commercial vehicles due to their high efficiency, reliability and the ability to separate brake circuits for trailers. Maintenance of such systems has its own specifics, due to the use of compressed air, multi-level valves, receivers and pneumatic actuators.

Main maintenance operations of pneumatic brakes.

a) Checking the tightness of the pneumatic system:
- –checking for leaks in connections, hoses, tubes;

–using soap solution or ultrasonic leak detectors.

b) Checking the operation of the compressor and receivers:

–measuring the discharge pressure;

–monitoring the time of filling the system to the nominal pressure;

–condition of the compressor drive, oil level (for lubricated compressors).

c) Draining condensate:

–from receivers and moisture separators (manual or automatic);

–important to prevent freezing and corrosion.

d) Filter and air dryer maintenance:

–regular replacement or regeneration of dryer cartridges;

–cleaning or replacement of fine filters.

e) Monitoring the operation of brake chambers and pressure regulators

–checking the tightness of cuffs, rods and diaphragms;

–visual assessment of the condition and lubrication of drive joints.

f) Maintenance of the trailer control system (duplex valves, EBS trailer):

–checking the tightness of the towing-trailer connection;

–monitoring the operation of safety valves and electronics.

The general maintenance regulations for vehicle brake systems are given in Table 4.38.

Table 4.38 – General table of maintenance regulations for vehicle brake systems

No.	Maintenance operation	Brake system type	Approximate frequency / conditions for performance	Notes
1	Visual inspection of components	All types	Every 10,000–15,000 km or at each MOT	Check for wear, leaks, cracks, corrosion
2	Checking the thickness of pads and discs	Disc / drum (all systems)	Every 15,000–20,000 km	Minimum thickness according to specifications
3	Checking the brake fluid	Hydraulic, ABS, ESP, EPB	Every year or every 15,000 km	Evaluation of color, transparency, moisture
4	Replacing the brake fluid	Hydraulic, electronic	Every 2 years or 40,000–60,000 km	DOT 3/4/5.1 according to manufacturer's specifications
5	Cleaning and lubricating the guide calipers	Hydraulic, EPB	Every 20,000–30,000 km or when replacing pads	High-temperature lubrication, cleaning from dirt
6	Diagnostics of electronic systems (ABS, ESP, EPB, brake-by-wire)	Electronic	Every 20,000–30,000 km or when errors appear	Use of OBD-II scanners, OEM software
7	Activating the service mode (EPB, brake-by-wire)	EPB, electromechanical	When replacing pads or discs	Through diagnostic interface
8	Software reset of indicators, adaptation of new components	Electronic, brake-by-wire	After maintenance or replacement	Through scanner or vehicle service menu
9	Draining condensate from receivers	Pneumatic	Daily (manual) or automatically, depending on the system	Used in freight transport

No.	Maintenance operation	Brake system type	Approximate frequency / conditions for performance	Notes
10	Checking the compressor (pressure, performance, drive condition)	Pneumatic	Every 30,000–40,000 km or when pressure drops	Belt replacement, lubrication check (if necessary)
11	Replacing the air filter-dryer	Pneumatic	Once a year or every 60,000 km	Cartridge or dryer maintenance
12	Checking the tightness of the pneumatic system	Pneumatic	Every 20,000–30,000 km or when pressure drops	Detection of leaks with soap solution, ultrasound
13	Checking the parking brake system	All types	Every 10,000–15,000 km or when scheduled maintenance	Mechanical or electronic adjustment
14	Checking regenerative braking	Electric vehicles, hybrids	Every 30,000–40,000 km or in case of malfunction	Analysis of interaction with the friction system, software update

Depending on the design, operating principle and type of drive, the brake systems of modern cars require a specific approach to maintenance. Let's consider the features of maintenance of the main types of brake systems, including pneumatic ones.

Features of servicing individual types of brake systems are given in Table 4.39.

Table 4.39 – Features of servicing individual types of brake systems

System type	Features of technical maintenance
Hydraulic system	Periodic check of level and condition of brake fluid, replacement according to regulations, bleeding of system after replacement of components or when air appears.
ABS / EBD	Checking of serviceability of wheel rotation sensors, cleaning of dirt, reading of error codes, assessment of functionality of pressure modulator.
ESP / ESC	Monitoring of operation of electronic units, checking of lateral acceleration sensors, steering wheel rotation, stabilization of movement, diagnostics via CAN-bus.
EPB (Electronic Parking Brake)	Activation of service mode before replacement of pads, checking of electric drive and fixing mechanisms, adaptation after installation of new components.
Brake-by-wire	Checking of operation of actuators, backup power supply, electronic control units, software update, emergency mode testing.
Regenerative system	Monitoring of interaction of electric motor with friction brakes, checking of smoothness of braking, checking of compliance of software settings of recuperation system.
Pneumatic system	Daily draining of condensate from receivers, monitoring of air pressure in the system, checking compressor operation, tightness of connections, replacement of filters and dryer cartridge.
Pneumatic chambers	Assessment of tightness of diaphragms, checking rod travel, lubrication of hinged joints of brake actuators.
Trailer pressure regulators / valves	Checking correctness of circuit switching, cleanliness of connections, testing emergency braking functions in the trailer, lubrication of pistons and seals.

System type	Features of technical maintenance
Comments: • Hydraulic systems require regular fluid replacement due to its hygroscopicity, which affects braking efficiency. • Electronic systems (ABS, ESP, EPB) are closely linked to the vehicle's CAN bus, which requires skilled use of scanners and special software. • Brake-by-wire systems operate without a direct mechanical connection to the brake pedal, so their serviceability critically depends on the power supply and software. • Pneumatic brake systems are highly efficient, but vulnerable to contamination and moisture. Regular maintenance of the compressor, receivers and dryer is critical for their reliability. • In trucks, it is important to regularly test trailer drive systems, as valve malfunctions can cause dangerous braking situations.	

Maintenance of modern brake systems is a complex and multi-level process that combines classic mechanical procedures with electronic diagnostics, software adaptation and preventive measures. High-quality and timely maintenance ensures uninterrupted operation of the brakes, extends the service life of components and guarantees the safety of the vehicle in any operating conditions.

Full-fledged maintenance of the vehicle brake system requires an integrated approach, which includes:

–traditional mechanical actions (inspection, replacement, lubrication);

–control of hydraulic and pneumatic parameters (pressure, tightness);

–electronic diagnostics and adaptation of software modules.

Special attention is required for trucks with pneumatic systems, which have a larger number of control elements and higher requirements for tightness and air purification. High-quality maintenance allows you to maintain stable operation of the brakes in any operating conditions and significantly reduces the risk of road accidents.

4.2.5.2.3 Repair technologies

Repair of the car brake system is a critical stage of maintenance, which directly affects road safety. Modern brake systems have become significantly more complicated due to the integration of electronics, automation of control and the use of advanced materials, which requires precise adherence to technological processes.

Repair measures are divided into:

–mechanical repair of friction components (brake pads, discs, drums, calipers);

–hydraulic or pneumatic repair of control circuits;

–electronic adaptation, calibration or replacement of control units.

Repair of hydraulic brake systems.

Main operations. Replacement of brake discs and drums: when worn below the minimum thickness, warping, cracks or overheating:

–replacement of brake pads: uneven wear, peeling of linings, overheating;

–repair / replacement of calipers: piston wear, jamming of guides, damage to cuffs;

–restoration of the master brake cylinder: replacement of seals, grinding of the cylinder;

–bleeding the system after repair: removal of air from the circuits, replacement of brake fluid.

Features:

–use only original seals, high-temperature lubricants;

–compliance with the sequence of tightening the caliper bolts;

–the need to adapt the EPB after replacing the pads or brake disc.

Repair of electronic systems (ABS, ESP, EPB, brake-by-wire). Main operations:

–replacement or repair of wheel rotation sensors (ABS): after mechanical damage or failure;

–repair of ESP/ABS control units: resoldering contacts, replacing relays, updating software;

–calibration of sensors and modules: after replacing control elements;

–restoration of EPB electric drives: replacement of gear motors, gears, sealing.

Features:

–after any replacement or intervention — mandatory diagnostics and adaptation via OBD-II;

–manual return of EPB rods without service mode is not allowed — possible damage.

Repair of pneumatic brake systems. Main operations:

–compressor repair: replacement of piston rings, seals, valves, performance check;
–replacement or repair of brake chambers: in case of diaphragm damage, mechanism jamming;
–air dryer repair: replacement of filter element, valves, condensate discharge;
–restoration of tightness of pneumatic lines: elimination of leaks in connections, replacement of tubes/hoses;
–maintenance of pressure regulators/distributing valves: cleaning, lubrication, replacement of springs or seals.

Features:

–during repair, it is necessary to completely reduce the pressure in the system;
–after intervention in the receivers, it is mandatory to check the safety valves;
–all components must be installed taking into account the direction of air flow.

General principles of brake system repair.

Safety above all: after each repair, a bench test of braking efficiency is performed.

Use of specialized tools: for example, service scanners, caliper releasers, pumping devices.

Use of recommended materials: oil, brake fluid, sealants - only according to the specification.

Service programming (if necessary): adaptation of sensors, resetting wear indicators, updating software.

Repair protocol: recording all operations in the service documentation or electronic journal.

Typical malfunctions and repair methods for brake systems of modern cars are given in Table 4.40.

Table 4.40 – Typical malfunctions and repair methods for brake systems of modern cars

No.	Brake system type	Typical malfunction	Possible cause	Repair / elimination method
1	Hydraulic	Reduced braking efficiency	Pad wear, fluid leakage, air in the system	Replacing pads, sealing connections, bleeding the hydraulic system
2	Hydraulic	Knocks, grinding noise during braking	Disc warping, pad wear or misalignment	Breathing or replacing discs, adjusting or replacing pads
3	Hydraulic	"Soft" or failing brake pedal	Air in the system, master cylinder wear	Bleeding the system, repairing/replacing the brake master cylinder
4	ABS	Frequent ABS activation or error on the instrument panel	Speed sensor contamination/damage	Diagnostics, cleaning or replacing the ABS sensor, resetting the error via scanner
5	ESP	Unstable vehicle behavior in corners or on slippery surfaces	Lateral acceleration or steering angle sensor failure	Replacing or calibrating sensors, diagnosing the ESP unit
6	EPB (Electronic Parking Brake)	Brake is not released or is not activated	Motor gear wear or failure, electrical malfunctions	Replacing the gear motor, checking the wiring, adapting via scanner
7	Brake-by-wire	Loss of braking force, ECU errors	Power failure, electric drive malfunction	Restarting the system, diagnosing and replacing the drive, updating the software
8	Pneumatic	Slow or incomplete brake activation	Air leak, system pressure drop, valve contamination	Sealing connections, diagnosing the compressor, cleaning or replacing valves

No.	Brake system type	Typical malfunction	Possible cause	Repair / elimination method
9	Pneumatic	Frequent dryer activation, excessive condensate in the receivers	Drying dryer cartridge, low ambient temperature	Replacing the cartridge, checking the dryer functions, additional heating
10	Pneumatic	Trailer emergency braking activation	Connector malfunction, trailer brake circuit depressurization	Checking valves, seals and air lines, replacing faulty elements
11	All types	Overheating of brake mechanisms	Caliper jamming, driving with the parking brake applied	Repairing or replacing the caliper, checking the EPB/parking brake mechanism
12	All types	Uneven braking, "pulling" to the side	Various pad wear, caliper or brake chamber malfunction	Replacing or restoring the symmetry of components, checking the pressure in the circuit
Notes: Scanners and diagnostic equipment are mandatory when repairing electronic and brake-by-wire systems. For pneumatic systems, it is necessary to perform leak testing after repair and check the pressure in the receivers. Replacing the brake fluid or bleeding the hydraulic system is performed after each disassembly or intervention in the circuits.				

Repair of brake systems of a modern car is a multi-component process that requires a combination of knowledge of mechanics, electronics, pneumatics and IT. Restoration of braking efficiency should be carried out not only at the level of replacing worn parts, but also through a full check of the interaction of mechanical and electronic components after repair. Timely, high-quality and professional restoration of the brake system is the key to the safety of the driver, passengers and all road users.

4.2.5.2.4 Technological equipment

The development of brake systems towards electronicization, automation and increased safety requires the use of specialized equipment for diagnostics, maintenance and repair. Depending on the type of brake system (hydraulic, electronic, electromechanical, pneumatic), various technological equipment is used, which ensures the accuracy of maintenance and compliance with manufacturer regulations.

An indicative list of technological equipment for diagnosing, maintaining and repairing vehicle brake systems is given in Tables 4.41 and 4.42.

Tables 4.41 – An indicative list of technological equipment for diagnosing vehicle brake systems

System type	Equipment	Functions
All types	OBD-II scanner / OEM diagnostic complexes (Bosch, Autel, Launch, Delphi)	Reading/resetting errors, checking ABS, ESP, EPB systems, adapting components
ABS, ESP	Multi-channel oscilloscopes	Analysis of signals from rotation, steering angle, pressure sensors
EPB, brake-by-wire	Diagnostic programmers and adapters	Activation of service mode, programming after repair
Pneumatic systems	Pressure gauges, pressure testers, digital barometers	Measurement of pressure in receivers and circuits
Pneumatic systems	Leakage testing devices (ultrasonic leak detectors, soap solutions)	Detection of leaks in pneumatic lines, chambers, connections
Hydraulic systems	Brake fluid testers (refractometers, electronic humidity sensors)	Control of quality and condition of brake fluid

System type	Equipment	Functions
All types	Brake test stand (roller, inertial, mobile)	Determination of braking efficiency, uniformity of action of the right and left sides

Tables 4.42 – An indicative list of technological equipment for maintaining and repairing vehicle brake systems

Operation	Required equipment
Maintenance equipment	
Bleeding the hydraulic system	Vacuum or pneumatic brake bleeding devices, manual bleeding kit
Replace the brake fluid	Automatic fluid change units with pressure dosing (ATE, Hella, Wurth)
Replace the pads and discs	Caliper release sets, torque wrenches, screw piston turning tools
Lubrication of the guide calipers	Precision grease guns with high-temperature lubrication
Pneumatic systems	Receiver condensate drains, dryers, cartridges, filters
Check the pressure	Portable digital pressure gauges, threaded adapters
Equipment for repairing brake systems	
Component	Equipment type
Calipers, brake cylinders	Disassembly presses, seal replacement devices, grinding sets
Brake discs / drums	Brake disc and drum boring machines
ABS/ESP/EPB	Soldering tables, block repair kits, antistatic equipment for electronics
EPB	Motor testers, motor-gearbox test stands, EPB service programmer
Pneumatic chambers and valves	Chamber removal/installation devices, pressure regulator test stands
Brake lines	Crimping devices, pipe benders, threading kits for metal highways

Workplace organization requirements. Working areas should be equipped with a hood, antistatic mats (for electronics) and safe access to pneumatic lines. Separate cabinets with ventilation are used for storing brake fluids. Scanners and diagnostic tools should be regularly calibrated and their software updated according to the manufacturer's recommendations.

Modern maintenance and repair of brake systems is impossible without the use of specialized diagnostic and service equipment. The increasing complexity of structures requires high accuracy, compliance with technological standards, as well as constant updating of knowledge and tools in accordance with innovative changes in automotive brake systems.

General summary of the chapter

A systems approach to the technical operation of cars involves a deep understanding of the design, principles of operation and specifics of servicing each unit, assembly and functional component. In modern cars, engineering solutions have evolved from mechanical to electromechanical and electronic systems, which requires a combination of traditional knowledge with digital skills.

4.3 Main technological processes of parts recovery

4.3.1 Classification of methods of parts recovery and structure of the technological route of recovery

To recover a worn-out part means to restore its initial geometric, physico-mechanical, physico-chemical and other properties (dimensions, geometric shape, material structure). The best recovery method is the one that guarantees the longest service life of the part at the lowest cost.

During major repair, up to 70 % of the parts are reused after recovery. The labor intensity of parts recovery is 45…55 % of the total labor intensity of major repair. The cost of recovery usually does not exceed 60…70 % of the cost of a new part.

In repair production, a repaired part is the result of certain types of processing. The technological routes of repair include two groups of operations: surface preparation for build-up and direct build-up of the worn surface. The first group of operations includes metalworking, machining on metal-cutting machines or electrophysical processing. The second group includes setting up an additional part, plastic deformation, surfacing, metallization, and application of electrolytic or polymer coatings.

The geometric shape and dimensions of a part can be restored by performing the following technological operations: building up surface layers of material instead of the worn-out one; plastic deformation; replacing part of the part material after processing its surface layers. Operations for restoring the physical and mechanical properties of the part material include the elimination of defects and strengthening the material by one or another type of processing. Technological methods for restoring parts consist of two groups: building up methods and processing methods. The first group includes methods in which the worn-out material of the part is compensated by applying other materials. These include welding and surfacing, spraying, metallization, application of electrolytic coatings and polymeric materials. The second group includes technological methods, such as pressure treatment, metalworking and mechanical processing, strengthening treatment.

Metalworking and mechanical processing is used as an independent method of repairing parts, as well as during processing to repair dimensions and in the case of installing additional repair parts.

Processing of parts by pressure is based on the use of the properties of metal to change the geometric shape and dimensions under the pressure of external forces without destruction.

Repair of parts by welding and surfacing consists in welding metal onto the worn surfaces of the parts, after which they are subjected to mechanical processing.

Repair of parts by spraying consists in spraying molten metal onto the prepared surface of the part using a metallizer.

Application of galvanic and chemical coatings consists in electrolytic or chemical deposition of metal onto the prepared surface.

Repair of parts with adhesive mixtures and plastics consists in connecting the damaged areas with synthetic materials.

4.3.2 Restoration of parts by mechanical machining

Mechanical machining is used when restoring parts to repair sizes and in the case of using additional repair parts.

Restoration of parts to repair sizes consists in the fact that one of the mating parts, which has a higher cost, is processed to the repair size, and the second is replaced with a new or repaired one of the corresponding repair size. In this way, the restoration of the original fit of the parts is ensured. This method is used to restore parts with cylindrical surfaces. Repair to the repair size is effective when the change in size does not lead to the elimination of the heat treatment of the part's surface. Repair sizes are given in the technical specifications for the major repair and are determined by the limit wear of the parts.

Parts of three types of repair sizes are used:

- standard, produced by the industry;
- regulated, which are established by the technical specifications for the major repair;
- free.

Standard repair dimensions are used for pistons, piston rings, piston pins, crankshaft liners, restoration of threaded connections, etc. Regulated repair dimensions are provided by the Technical Specifications for the restoration of camshaft journals and their bushings, valves and guides.

Restoration of parts using a additional repair parts is used to repair parts that have worn seating surfaces (gearbox housings, hubs, bridge beams, etc.).

Restoration consists in removing the defective part of the part (Fig. 4.3.1), and installing a specially manufactured part in its place (by welding, threading, fitting).

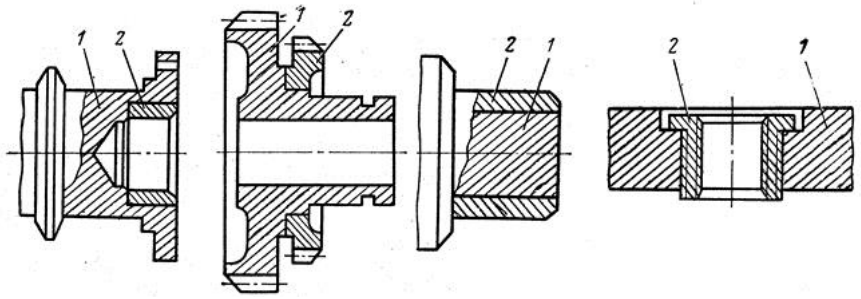

a b c d

Figure 4.3.1 – Restoration of worn parts by installing additional parts: a – internal surfaces of holes; b – gears; c – journal necks; d – threads; 1 – worn part; 2 – additional part

After that, the working surface of the part is processed to the required size. Depending on the type of restored surface, the additional repair parts can have the form of a sleeve, ring, washer, bushing. In the case of pressing the additional repair parts, it is desirable to heat the main part to increase the strength of the connection (flywheel gear ring).

The disadvantages of this method of restoration include its complexity and high cost, as well as a decrease in the mechanical strength of the main part in some cases.

Metalworking and mechanical processing is used in almost all methods of restoring parts. In terms of labor intensity, it accounts for 40…80 % of the total labor costs for repair. In addition to metalworking and mechanical processing, various types of mechanical processing are used in repair production: turning, milling, grinding, boring, etc.

4.3.3 Restoration of parts by plastic deformation

This repair method can be used for parts made of plastic materials (steel, malleable cast iron, bronze, etc.). It is based on the growth of plastic properties of the metal, i.e. its ability under certain conditions under the action of load to acquire residual deformations without violating the integrity. It is used to restore the dimensions of worn surfaces and the shape of deformed parts. Parts made of non-plastic materials or complex configurations are not restored by this method. There are two types of pressure processing of parts: cold and hot. Hot is carried out at temperatures of 300…800 ^{0}C.

The quality of plastic deformation is affected by the plasticity of the material, the heating temperature, the rate of deformation, etc.

The most plastic are chemically pure metals. Adding impurities leads to a decrease in plasticity.

Cold deformation is called plastic deformation of a part, which occurs at temperatures lower than the recrystallization temperature and which leads to the compaction of metal grains (hardening). Hot deformation is the plastic deformation of a part that occurs at temperatures above the recrystallization temperature. The heating temperature of the part affects the plasticity of the metal from which it is made. The resistance of deformed steel heated to the forging temperature is 10–15 times lower than the resistance in the cold state.

Depending on the acting forces and directions of deformation, the restoration of parts by pressure processing is carried out in various ways: straightening, draft, distribution, crimping, drawing, etc. (Fig. 4.3.2).

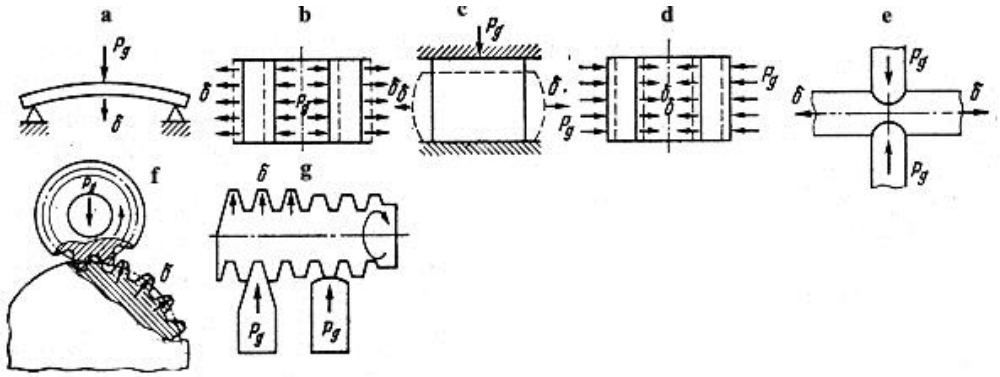

Figure 4.3.2 – Schemes of parts restoration by pressure: a – straightening; b – distribution; c – draft; d – crimping; e – drawing; f – knurling; g – electromechanical landing and smoothing

The essence of straightening (Fig. 4.3.2 a) is that under the action of external forces, the original shape of the part is restored. Straightening can be static bending or impact.

Static straightening is used in a cold or hot state.

Cold straightening does not provide proper quality of part restoration due to the risk of backlash and reduced fatigue strength. The risk of backlash is caused by the fact that during cold straightening, unbalanced internal stresses arise, which over time balance out and lead to repeated deformation of the part.

Several methods are used to improve the quality of cold straightening. The first method is straightening the part under pressure for a long time. The second method is double straightening, which consists in the fact that the return arrow of the deflection is obtained 10...15 times greater than the deflection that the shaft had before straightening. The third is the stabilization of the straightening by subsequent heat treatment. The best method is the third method.

Hot straightening is performed when large deformations of the part are required. Heating can occur both in part and in the entire part. After straightening, it is necessary to perform heat treatment of the part. The optimal temperature for hot straightening is the interval 600–800 ^{0}C.

With the correct execution of the technological process of impact straightening, high quality straightening is achieved. Quality is determined by the stability of the straightening over time, high accuracy (up to 0.02 mm), a decrease in fatigue strength, etc. The impact straightening process itself is quite simple and fast in time. The correction is carried out using the reciprocating movement of the tool relative to the part. A pneumatic hammer is used as a tool for impact straightening.

To measure the deflection of the shaft, it is installed in the centers of the lathe. The value of the deflection is determined as half the shaft runout, which is shown by the indicator.

Plastic redistribution of metal restores parts during distribution, shrinkage and crimping.

During distribution (Fig. 4.3.2 b), the direction of the acting force coincides with the direction of the desired deformation. It is used to increase the size of the outer surface of hollow parts while maintaining height. The change in the outer diameter of the part occurs by increasing its inner diameter, which is changed using a distributing ball, roller, etc. The increase in the inner diameter of the part depends on its material, temperature, amount of wear, and size of the part and does not exceed 1 mm per diameter. Typical parts that can be restored by distribution include piston pins, cardan shaft crosses, pipes, differential cup, etc.

During shrinkage (Fig. 4.3.2 c), the direction of the acting force does not coincide with the direction of the desired deformation. This method is used to increase the outer diameter of solid parts, reduce the inner diameter and increase the outer diameter of bushings by reducing their length of parts such as “bronze bushings”, valve tappets, etc. The change in the diameters of the part occurs by reducing its height, therefore its reduction by 5–15 % is allowed.

When crimping (Fig. 4.3.2 d), the direction of the acting force coincides with the direction of the desired deformation. The method is used to restore hollow parts that have been worked out along the internal working hole. The change in the inner diameter of the part occurs by crimping using a matrix. Typical parts that are restored by crimping include bushings made of non-ferrous metals (camshafts), roller bearing separators, levers, etc.

Drawing (Fig. 4.3.2 e) is performed to increase the length of the part (lever, rod, rod) by locally changing the cross-section in a small area. It is performed in a hot state with local heating of the part to a temperature of 1070…1120 K. Knurling (Fig. 4.3.2 f) is used to increase the external dimensions of cylindrical parts by extruding metal, for example, to restore fixed seats for rolling bearings. A toothed

cylindrical roller is used to roll the shaft neck, which is pressed into the body of the part under the action of force P, increasing its diameter by 0.2…0.4 mm. Knurling is performed on a lathe, installing the roller in a caliper on a special holder. Sometimes a cage with steel balls is used as a rolling tool. Suggested speeds for rolling rollers: for steel 8–20 m/min, cast iron 10–15 m/min, brass and bronze 30–50 m/min, aluminum up to 90 m/min. Rolling is carried out with both transverse and longitudinal feed.

4.3.4 Restoration of parts by welding and surfacing

Welding is the process of permanent joining of metal products by local heating to a molten state. The welding process is characterized by the type of energy required for welding: melting and pressure. A strong welded joint of metals is based on atomic interaction. Adhesion occurs as a result of the formation of atomic-molecular bonds between mating surfaces brought together at a distance of about 10^{-8} cm.

Welding is used to eliminate mechanical damage to parts (cracks, holes), and surfacing is used to apply metal coatings to the surface of parts to compensate for their wear. During the welding process, the metal is heated to the melting point, while harmful metallurgical processes occur in it: metal oxidation, burnout of alloying elements, saturation of the surfacing metal with nitrogen and hydrogen. In this case, the mechanical properties of the metal decrease.

During welding, the part is heated unevenly and changes in the metal structure are possible. This, in turn, causes internal stresses, due to which cracks and deformations occur in the parts. Internal stresses are reduced by preheating the part and heat treatment after welding and slow cooling. Also by using technological techniques during welding.

Fusion welding is carried out by fusing metals without the use of pressure, using in most cases additional filler material. Arc, gas, electroslag and other types of fusion welding have become widely used. According to the method of mechanization of the process, electric arc welding is divided into manual, semi-automatic and automatic.

Manual welding is characterized by the fact that the electrode feed and the movement of the arc are carried out manually. In semi-automatic welding, only the electrode wire feed is mechanized, and the movement of the arc is carried out manually. In automatic welding, the electrode feed and the movement of the product are carried out automatically.

Gas-shielded welding is a type of electric arc welding in which a shielding gas is used to prevent the action of air on the molten metal. The most commonly used shielding gases are argon and carbon dioxide. Argon is used for welding chemically active metals and alloyed steels, and carbon dioxide is used for carbon alloys.

During welding with a covered electrode, an electrode with a powder coating applied to its surface is used.

Gas welding is a type of welding in which the heat of combustion of a mixture of combustible gases with oxygen is used for local melting of the edges of the welded product.

Electroslag welding is a type of fusion welding using the heat released when an electric current passes through molten slag.

Electron beam welding is a type of fusion welding in a vacuum, which is based on the use of the energy of a focused electron flow in a high-voltage electric field.

Laser welding is based on the use of energy from a highly directed light flux, in which the metal is heated by a coherent light beam created by an optical quantum generator - a laser.

Thermite welding - a type of welding, during which the heat of the exothermic reaction of the thermite mixture (a powdered combustible mixture) is used, and the seam is formed due to the metal - the reaction product.

Submerged arc welding - automatic arc welding, using a fusible electrode wire and flux. The flux enters the arc zone to protect the weld metal from air, as well as to alloy the deposited metal. Melting, the flux creates a slag shell around the arc.

Surfacing is a technological process of applying a molten layer of metal to the surface of a metal part by welding.

Surfacing can restore the lost dimensions of a worn-out part and apply a layer of metal with certain properties. Surfacing can restore worn-out parts many times. Often, a part restored by surfacing is much cheaper than a new one and is not inferior to it in workability.

The outer and inner surfaces of cylindrical parts, as well as flat surfaces, are surfacing. With a small diameter of the part, surfacing is performed along a helical line. On large parts, surfacing is performed with

rollers 60…80 mm long along the generator. Flat surfaces of parts are surfacing with rollers along the entire length of the surface.

For repair and restoration of parts by surfacing, the considered traditional welding methods are widely used: arc, gas.

Pressure welding is welding with local plastic deformation of the connected parts under the action of static or dynamic force with or without heating. The main types of pressure welding: contact, cold, explosion, ultrasonic, etc.

Contact welding is pressure welding, in which parts are heated by the heat released during the passage of current in the connected parts that are in contact.

Cold pressure welding is performed without heating.

Explosion welding is based on the use of explosion energy.

Ultrasonic welding is performed without heating and is based on the connection of parts of the part under the action of ultrasonic vibrations.

Depending on the type of welded joint, contact welding is divided into butt, spot, relief and seam.

4.3.4.1 Manual arc welding

Arc welding is a fusion welding process in which the heating and melting of the edges of the parts to be joined occurs by an electric arc.

The diagrams of the main types of arc welding are shown in Fig. 4.3.3.

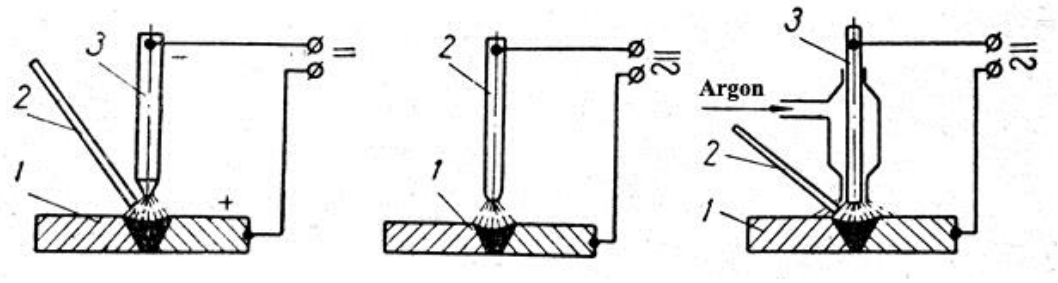

a b c

Figure 4.3.3 – Schemes of the main types of arc welding: a – welding according to the Benardos method; b – welding according to the Slavyanov method; c – argon-arc welding

The most common is manual arc welding and surfacing with consumable electrodes (Slavyanov method) (Fig. 4.3.4).

For local melting of the edges of the welded parts, the thermal effect of the electric arc is used. A direct or alternating current arc burns between a metal electrode and the welded products that are included in the electric circuit. The arc temperature is more than 6000 K. Melting with an arc, the electrode is simultaneously a filler material. A steel rod made of carbon wire with a coating (coating) is used as an electrode. Electrode coatings are divided into thin and thick. More common thin coatings are designed to stabilize the burning of the electric arc, they consist of 80…85 % chalk and 15…20 % liquid glass.

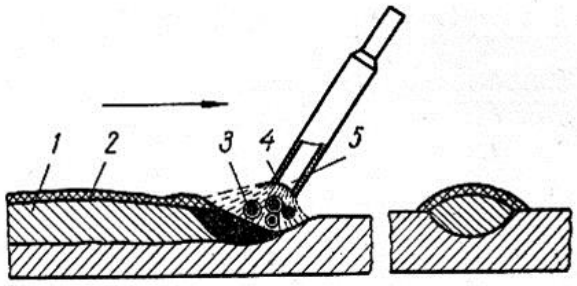

Figure 4.3.4 – Scheme of the formation of a surfacing bead: 1 – surfacing bead; 2 – slag; 3 – metal droplets; 4 – electrode coating; 5 – electrode rod

When repairing car parts, electrodes with a wire diameter of 1.2 to 5 mm are used. By purpose, there are electrodes for welding carbon and low-alloy structural steels, as well as special steels, cast iron, non-ferrous alloys. There are two types of electric arc welding: alternating and direct current. The direct current electric arc is more stable, in addition, such welding can be performed in direct and reverse polarity,

connecting in the first case to the part plus of the current source, and to the electrode minus, and in the second case - vice versa. Alternating current is mainly used for welding. Welding is usually carried out with direct current at reverse polarity. The part is connected to the negative pole of the current source, which provides its lowest heating. The quality of welding and welding depends on the mode, the main parameters of which are the diameter of the electrode and the strength of the welding current. The diameter of the electrode (3...5 mm) depends on the thickness of the welded metal. The current strength depends on the diameter of the electrode and is set to 40…50 A per millimeter of electrode diameter.

Before welding, the surfaces are prepared: the surface is cleaned of dirt, grease and corrosion, if the metal thickness is more than 5 mm, the crack is developed with a grinding wheel using a hand grinder.

4.3.4.2 Semi-automatic welding in a carbon dioxide environment

Semi-automatic welding is very often used for the repair of thin-sheet parts. It is characterized by high labor productivity, insignificant heating of the part. Protection of the molten metal from the harmful effects of oxygen and nitrogen in the air is carried out by a jet of carbon dioxide CO_2, which, when exiting the burner (Fig. 4.5), displaces air from the welding zone. 25 kg of carbon dioxide is poured into a 40-liter cylinder, from which carbon dioxide gas is formed, sufficient for 12–15 hours of continuous operation. During welding in carbon dioxide, the arc burns between the electrode wire, which is the electrode and is directly fed into the arc. For mechanized welding and surfacing, steel welding and surfacing wire steel with a diameter of 2.0 mm is used.

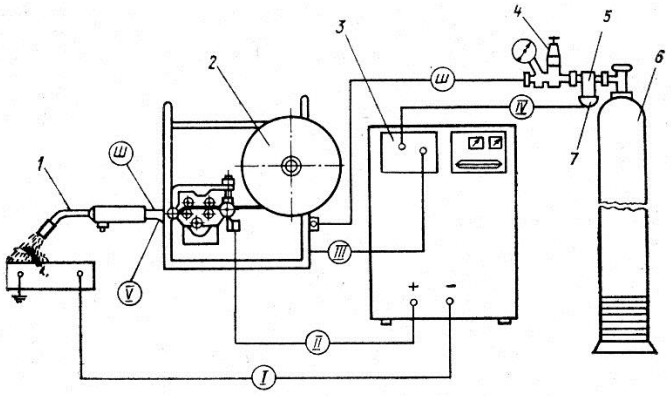

Figure 4.3.5 – Installation diagram for semi-automatic welding and surfacing in a carbon dioxide environment: 1 – welding torch; 2 – feed mechanism; 3 – power source; 4 – reducer; 5 – dryer; 6 – carbon dioxide cylinder; 7 – heater; I-IV – connecting cables; III – hoses

A semi-automatic welding machine is used, which consists of a welding straightener, a feeding mechanism, a holder with a hose. The wire is fed automatically, and the arc is moved manually. The welding wire is fed to the product through a special hose.

Welding is performed using direct current of reverse polarity. The current strength depends on the diameter and speed of the electrode wire feed. The welder only needs to withstand a certain distance of the electrode wire and move the torch at a certain speed.

4.3.4.3 Gas welding

Gas welding in auto repair production is widely used, due to its simplicity and versatility, the ability to perform a variety of welding operations.

For local melting of the edges, the heat of combustion of a mixture of combustible gas and oxygen is used. The edges of the welded parts are melted with the flame of a gas burner, and the gap is filled with a filler wire made of low-carbon steel. The diameter of the wire is selected depending on the thickness of the welded metal.

The most widely used is acetylene-oxygen welding with a flame temperature of 3100…3300 ^{0}C. Oxygen is stored in 40-liter cylinders (Fig. 4.3.6) under a pressure of 15 MPa, therefore, gas reducers are used to reduce it to a pressure slightly higher than atmospheric. Acetylene C_2H_2 is a chemical compound of carbon and hydrogen. The main method of producing acetylene is the decomposition of calcium carbide with water in acetylene generators.

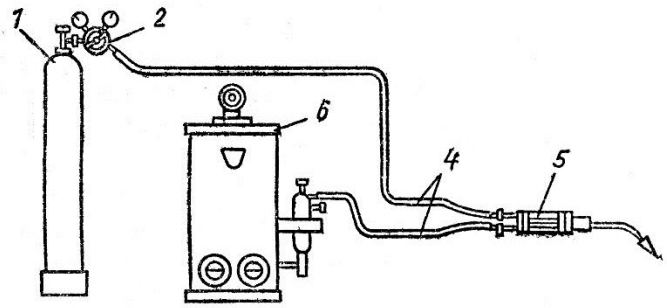

Figure 4.3.6 – Scheme of a gas welding station: 1 – oxygen cylinder; 2 – oxygen reducer; 3 – valve; 4 – hoses; 5 – torch; 6 – acetylene generator

Fluxes are widely used in gas welding, the use of which is necessary for welding cast iron, non-ferrous metals and some grades of steel. Fluxes are added to the welding bath to dissolve oxides and form low-melting slags. Technical borax is often used as a flux.

The main tool of the welder is gas burners, mainly of the injector type (oxygen is supplied under a pressure of 2...4 atm and sucks in acetylene). They are used to mix combustible gas and oxygen in the required proportions.

During gas welding, two methods of moving the burner are used: left and right. With the left method, the burner flame moves from right to left and is directed at the cold metal, with the right - vice versa. In the first case, the filler wire moves in front of the burner, and in the second - behind. With a thickness of the welded parts up to 3 mm, the left method is more productive.

The disadvantages of gas welding include the high cost of oxygen and acetylene and a deep heat-affected zone.

4.3.4.4 Welding of cast iron parts

Gray and malleable cast iron are used in the manufacture of many automobile parts. Cylinder blocks, clutch and gearbox housings, and exhaust manifolds are made of gray cast iron. Malleable cast iron is used in the manufacture of wheel hubs and main gear housings. Typical defects: cracks, holes, broken flanges. Cast iron has a number of chemical and physical properties that make it difficult to weld: it is brittle and poorly plastic. Local heating and rapid cooling create large internal stresses that lead to cracks.

Various welding methods can be used to weld cast iron: manual electric arc welding, gas welding, low-temperature and high-temperature soldering of cast iron.

One of the most reliable methods of welding cast iron is gas welding with general uniform heating of the part and slow cooling. But this process is inefficient and laborious, so it is rarely used. More common is manual electric arc welding without general heating of the part. Technological measures aimed at improving welding include the use of small-diameter electrodes and low-current welding.

Before welding, the part is cleaned. To prevent further spread of the crack, it is drilled. Welding of cracks in thin unloaded walls is carried out without developing the edges. If the metal thickness is more than 5 mm, then the crack is developed, for example, with an electric grinder. Welding is recommended to be performed with direct current of reverse polarity with electrodes, the rod of these electrodes is made of copper, which gives the seam high plastic properties. Electrodes in which the rod is made of nickel give good results. After applying the weld, it is recommended to forge, which strengthens the metal, removes internal stresses and increases the tightness of the welded joint.

4.3.4.5 Welding of aluminum alloy parts

Aluminum alloys based on aluminum and silicon - silumins - have become widespread for the manufacture of automotive parts.

Aluminum alloys have a number of specific properties that make their welding difficult. On their surface there is always an oxide film, the melting point of which is 2000 0C, while the melting point of the base metal is 650…670 ^{0}C. The thermal conductivity of these alloys is three times higher than that of steel, so heat is quickly removed from the heating point. This requires the use of powerful heat sources. The aluminum alloy does not change its color in the molten state and remains silvery, the welder may not notice the beginning of melting.

When the welding point cools, significant internal stresses can occur in the part. The causes of stress are the large coefficients of shrinkage (1.8 %) and linear expansion (0.24 per 1 m) of aluminum alloys. As a result of stress, cracks may occur.

Before welding, it is recommended to heat aluminum alloy parts to a temperature of 200–300 ^{0}C.

The main methods of welding aluminum alloys are: manual argon-arc welding (Fig. 4.3.7), gas welding and electric arc welding.

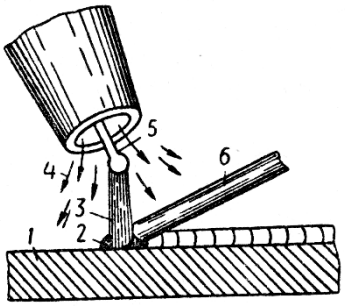

Figure 4.3.7 – Argon arc welding scheme

Damage to aluminum alloy parts is best repaired by manual argon-arc welding with a tungsten electrode using a filler aluminum wire, which is cleaned of oxide film before welding by immersion in a weak solution of orthophosphoric acid. The diameter of the tungsten electrode is selected depending on the welding current.

4.3.4.6 Submerged arc welding

Widely used to restore cylindrical and flat surfaces of parts. In this method, two main electrode movements are mechanized - its feeding to the part and movement along the weld seam.

In the conditions of auto repair production, submerged arc welding is used to restore crankshaft journals, splined shaft surfaces and other parts.

The essence of the submerged arc welding process is shown in Fig. 4.3.8. Part 5, which is installed on a lathe, contacts through the surfacing head 1 with the electrode wire 2. Flux 4 is fed automatically from the hopper 3. Under the influence of high temperature, a gas combustion zone is formed, in which the arc melts the metal and part of the flux. The flux forms an elastic shell of liquid flux around the arc, which protects the metal from oxidation and spatter.

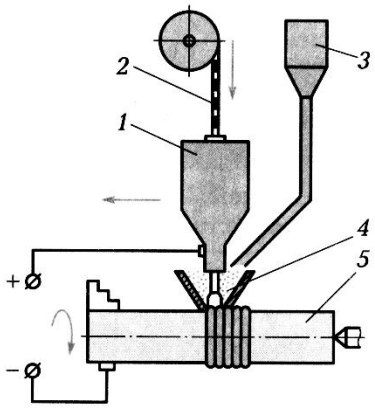

Figure 4.3.8 – Scheme of electric arc surfacing of a cylindrical surface of a part under flux

Submerged arc welding provides alloying of the metal through the wire and flux to obtain a coating that is uniform in chemical composition and properties, protection of the welding arc, removal of dissolved gases and slag inclusions from the weld pool. This is an economical and least energy-consuming method of welding, which allows you to obtain a layer of welded metal of great thickness (1.5…5.0 mm). The disadvantages include: significant heating of the part, the impossibility of welding on parts with a diameter of less than 40 mm, difficulties in removing the slag coating, the occurrence of cracks and the formation of pores in the welded metal.

4.3.4.7 Surfacing in a carbon dioxide environment

Surfacing in a carbon dioxide environment (Fig. 4.3.9) is fundamentally not much different from submerged arc surfacing. Carbon dioxide is used as a protective medium.

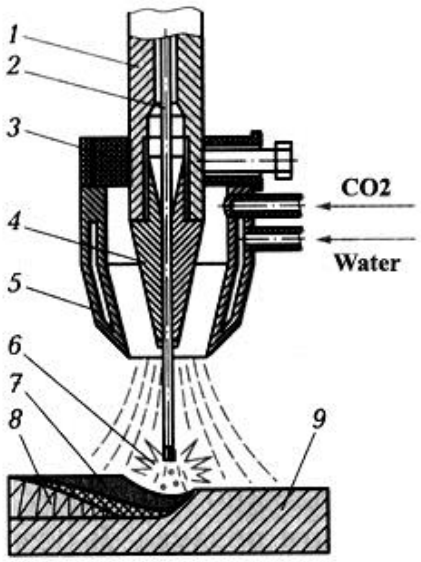

Figure 4.3.9 – Scheme of surfacing in a carbon dioxide environment

Current is supplied to the electrode wire 2 through the mouthpiece 1 and tip 4, which are located inside the gas-electric torch 3. During surfacing, the metal of the electrode wire 2 and the part 9 are mixed, and carbon dioxide is supplied to the combustion zone of the electric arc 6 under a pressure of 0.05…0.2 MPa. When the nozzle 5 of the torch moves along the part 9 behind the weld pool 7, a layer of surfacing metal 8 is formed.

When surfacing in a carbon dioxide environment, less heating of the part is observed, it is possible to process parts of any size, surfacing occurs in any position of the part. The productivity of the process is 20…30 % higher.

The disadvantages are increased metal spatter and open world radiation.

4.3.4.8 Vibroarc surfacing

Vibroarc surfacing is used in the restoration of automotive parts made of carbon and low-alloy steels, gray, malleable and high-strength cast iron.

Surfacing is characterized by oscillations of the welding wire with a frequency of 50…100 Hz and low voltage. Equipment: a converted lathe that provides slow rotation of the part, a surfacing head and a welding current source. Surfacing is performed in a liquid environment (10…20 % glycerin solution) with a welding wire 1.2…3 mm. The essence of the vibroarc surfacing process is the periodic closing and opening of the electrode wire, which is under current, and the surface of the part (Fig. 4.3.10).

The advantages of liquid-immersed vibro-arc surfacing are the absence of heating and deformation of the part, the possibility of hardening the surfacing layer, which often eliminates the need for subsequent heat treatment, and less carbon burnout. The disadvantages of surfacing are a significant decrease in the fatigue strength of parts, uneven hardness of the surfacing layer, and inhomogeneity of the metal microstructure.

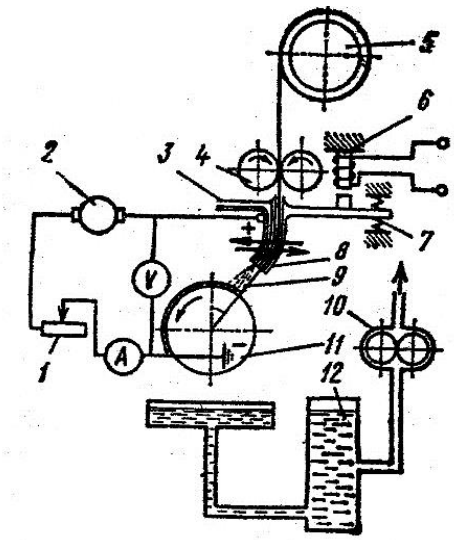

Figure 4.3.10 – Installation diagram for automatic vibro-arc surfacing: 1 – coil; 2 – generator; 3 – tube for supplying coolant; 4 – rollers for feeding electrode wire; 5 – cassette with wire; 6 – electromagnetic vibrator; 7 – spring; 8 – tip; 9 – electrode wire; 10 – pump for pumping coolant; 11 – restored part; 12 – tank for collecting coolant

4.3.4.9 Plasma and laser surfacing

Plasma and laser surfacing is a type of surfacing in which the heat source is a plasma arc or a laser beam, and the filler or electrode materials are solid or powder wires, a stationary filler in the form of cast or sintered rings or granulated powders.

The methods of supplying filler materials to the part can be:

- using a dispenser;
- by preliminary application of powders to adhesive mixtures;
- in the form of colloidal solutions.

These methods provide the necessary hardness and the specified chemical composition of the surfacing metal already at a distance of 0.3…0.5 mm from the surfacing surface, which makes it possible to limit oneself to a single-layer surfacing where 3–4 layers must be surfacing by the electric arc method.

The advantages of plasma and laser surfacing are: high concentration of thermal power and minimum width of the heat affected zone, the possibility of obtaining a thickness of the surfacing layer from 0.1 mm to several millimeters, the possibility of surfacing various wear-resistant and anti-friction materials (copper, brass, plastic) onto a steel part. Plasma and laser surfacing restore valve plates, camshaft cams and other parts.

4.3.4.10 Repair of parts by soldering

Repair of parts by soldering consists in connecting two metal surfaces that are in a solid state using a solder (molten intermediate metal or alloy) that has a melting point lower than that of the base metal. The molten solder wets the surfaces to be joined and, solidifying upon cooling, bonds these surfaces. The strength of the solder is affected by the mutual diffusion of the solder and the material of the joint. The degree of diffusion depends on the properties of the solder and the base metal, on the cleanliness of the surfaces of the parts to be joined, on the soldering temperature and the holding time at this temperature.

Both pure metals and their alloys are used as solders. The following requirements are imposed on solders:

- the melting point of the solder must be lower than the melting point of the metals from which the parts being repaired are made;
- when soldering, the solder should wet the surfaces well and fill the connecting gaps;
- the solder should provide a connection with the necessary mechanical properties;
- the coefficient of thermal expansion of the solder should be close to the thermal expansion of the metal from which the parts being repaired are made;

As solders, soft solders are used - alloys on tin and lead bases with a melting point of 235–280 ^{0}C, which have high corrosion resistance and high technological properties, and hard, mainly copper-zinc solders with a melting point above 450 ^{0}C.

Soft solders make it possible to solder with a soldering iron, which is heated with a blowtorch or gas burner. For continuous operation, gas or gasoline burners can be attached to the soldering irons. The most common are solders that are produced in the form of rods.

To clean the surface from oxides and protect against further oxidation during soldering, liquid and solid fluxes are used. The following requirements are imposed on fluxes:

- they must enter into a chemical interaction or dissolve oxides;
- reduce the surface tension forces of the liquid solder;
- wet metal surfaces well;
- do not have corrosive activity on connecting parts and solders. It is good to remove from the surface during soldering.

When soldering with tin-lead solders, aqueous solutions of zinc chloride ($ZnCl_2$), ammonium chloride (NH_4Cl) and rosin are used as fluxes. When soldering with copper, copper-zinc and silver solders, fluxes based on boron compounds are used. When soldering aluminum alloys, special fluxes are used, which consist of a mixture of chloride and fluoride metal compounds. These fluxes actively dissolve refractory compounds of oxide films.

Preparation for soldering consists in mechanically cleaning the surface from dirt, oxides and rust and in degreasing it with a solvent. Then the surface is etched with a liquid flux, and the soldering iron tip is tinned with solder using ammonia. After soldering, the parts are slowly cooled to the temperature of complete solidification of the solder, then the solder joint is washed with hot water to remove flux residues and cleaned of solder deposits.

When soldering copper, steel and cast iron parts, rosin and borax are used as flux. Soldering of parts is carried out with the flame of welding torches and induction heating.

Soldering is used in the repair of radiators, fuel tanks, and fuel lines. There is a special copper department for this.

4.3.5 Restoration of parts with electroplating

Chromium plating and iron plating have become widely used for the restoration of automobile parts. Their great advantage is the application of deposits of high hardness and wear resistance to worn surfaces of parts without disturbing the structure of the base metal.

The process of electrolytic metal deposition is based on the laws of electrolysis, i.e. the passage of direct current through the electrolyte in the bath (Fig. 4.3.11).

Solutions of acids and salts of the metals to be applied to the part are used as electrolytes. Current enters the electrolyte from the source through conductors called electrodes. The electrode connected to the positive pole of the current source is called the anode, and the electrode connected to the negative pole is called the cathode. When a direct current passes through the electrolyte, its salts dissociate into positively charged metal ions and negatively charged ions of the acid residue. Negatively charged ions move to the anode. If the part to be restored is used as the cathode, and there are metal ions in the electrolyte, the latter will be deposited on the surface of the part.

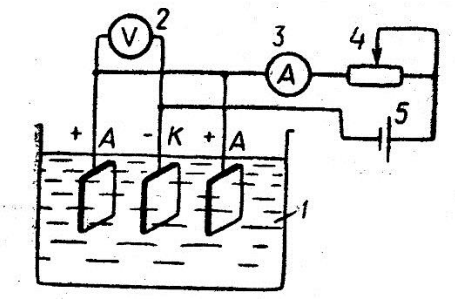

Figure 4.3.11 – Scheme of the installation for applying galvanic coatings: 1 – electrolyte; 2 – voltmeter; 3 – ammeter; 4 – rheostat; 5 – power source

A set of galvanic equipment is used to restore parts: plating or chrome plating baths, degreasing, etching, hot and cold washing baths, neutralization bath, direct current sources, control panels.

The technological process of electrolytic build-up includes the following operations:
- preliminary mechanical treatment of surfaces, if the part has a taper, ovality, scratches and burrs;
- insulation of surfaces that cannot be restored;
- cleaning from oxides and degreasing;
- mounting parts on suspensions;
- anodic treatment (pickling) to remove oxide films;
- coating;
- washing and drying.

Chromium plating allows you to obtain high hardness of the coating, but has low productivity, so the layer thickness is up to 0.3 mm, its process is expensive. There are hard and porous chrome plating.

The build-up is performed in hot electrolyte, using soluble electrodes made of low-carbon steel 08 or 10. Compared to chrome plating, the build-up has the following advantages: high metal output per current (5...6 times higher than with chrome plating); higher coating speed (10…15 times higher than with chrome plating); possibility of obtaining a coating of considerable thickness (up to 1.5 mm) with sufficiently high hardness; possibility of using cheap electrolyte.

To restore worn internal surfaces of large parts, the method of reverse flow plating is sometimes used.

4.3.6 Restoration of parts by metallization

The essence of restoration of parts by metallization is the spraying of molten metal onto a previously prepared worn surface of the part. The material that is applied to the surface of the part, in the form of a wire or powder, is fed into the metallizer, melted in a heat source and sprayed with a high-speed stream of compressed air or a gas jet. When hitting a rough surface of the part, the molten small particles deform and, invading the pores and irregularities of the part, form a coating.

The main advantages of metallization are: high process productivity, low heating of the part (120–180 ^{0}C), simplicity of the technological process, the possibility of applying coatings with a thickness of 0.1 to 10 mm and more from almost any metals and alloys. The disadvantages of the process include reduced mechanical strength of the coating.

Depending on the method of melting the metal, gas-flame, electric arc, high-frequency and plasma metallization are distinguished.

Flame metallization is carried out by melting the metal with an acetylene-oxygen flame. Electric arc metallization is performed by devices in which the metal is melted by an electric arc. High-frequency metallization is based on the principle of induction heating of the deposited metal. The disadvantages of these methods are the low adhesion strength of the coating to the surface of the part and significant porosity, fragility and low mechanical strength. These disadvantages are absent in the method of coating with a plasma jet, which is a state of matter with a high degree of ionization. The plasma jet is obtained by heating the plasma-forming gas in the electric arc of a plasma torch (plasma torch). The plasma torch consists of a water-cooled cathode made of tungsten and a copper anode (nozzle), also cooled by water.

To obtain a plasma jet between the cathode and the anode, an electric arc is excited from a 60…70 V DC source. The temperature of the plasma jet reaches 10,000…30,000 ^{0}C, and the flow velocity is 1000…1500 m/s. Nitrogen, argon or their mixtures are used as plasma-forming gases. Wire or powder alloys based on nickel, chromium or iron with a high carbon content are used as the starting material.

Before coating, the surface of the part must be cleaned of dirt, oil, moisture, rust. The adhesion strength is achieved due to the roughness on the surface of the part, which is obtained by cutting a torn thread, shot blasting, electric spark treatment, knurling with a corrugated roller.

Processing of parts after metallization includes the following operations: slow cooling of parts to ambient temperature, mechanical processing of parts surfaces to the required size. Depending on the hardness of the coating, the required accuracy and roughness of the parts surfaces, turning, boring and grinding are used.

4.3.7 Restoration of parts with synthetic materials and plastic welding

Synthetic materials (plastics, adhesives, pastes) are used to eliminate mechanical damage to parts (cracks, holes, chips), to compensate for wear of the working surfaces of parts, to connect parts by gluing.

To eliminate defects in parts, polymer materials are used in the form of: finely ground powders, granules and multicomponent compositions.

Cracks and holes are most often filled with epoxy compositions after appropriate preparation. For example, the preparation of a composition based on epoxy resins is carried out in the following sequence: heating the epoxy resin (40–50 ^{0}C), selecting the required dose of resin, introducing a plasticizer with thorough mixing, introducing a filler with mixing. Before using the composition, a hardener is added to the resin composition. The shelf life of the composition is 15–20 minutes. Other compositions of polymeric materials are prepared according to their individual recipes or purchased ready-to-use (cold welding, cold molecular welding).

For bonding metals (steel, cast iron, aluminum alloys), adhesive compositions based on synthetic resins are used. Such compositions have high mechanical strength, adhesion to metals and can withstand fairly high temperatures (up to 300 ^{0}C).

Elimination of defects in parts with polymeric materials is performed in the following sequence: general preparation of the part, special preparation, elimination of the defect, processing of the part after elimination of the malfunction.

There are several methods of applying polymeric materials to parts: spreading, gas-flame spraying, vortex and jet methods, pressing, injection molding, etc.

Wide cracks of great length are reinforced by applying several layers of fiberglass (Fig. 4.3.12). A patch of fabric is also applied to the hole. In the auto repair industry, various synthetic adhesives are widely used. They are used, for example, for gluing friction linings to brake pads.

Stone paste is also used to eliminate cracks in parts that do not carry heavy loads. Stone paste is prepared according to its own recipe. The paste can be stored for a long time, so it is prepared with the expectation of use within 2–3 months. Before applying the paste, the surface of the part around the defect is cleaned and degreased. If necessary, cracks are developed with a chisel and drilled. The paste is applied with spatulas, rubbing it well into the surface until completely wetted. At a temperature of 18–20 ^{0}C, the paste hardens within 18–20 hours, at 40–50 0C – 8–10 hours.

However, most synthetic materials have a number of disadvantages: lack of adhesion to liquid contaminants (oil, fuel, antifreeze, water) and solid inclusions, high temperature coefficient of the polymerization process, etc.

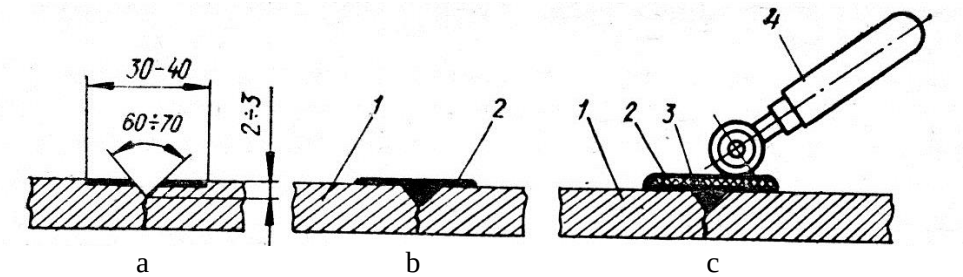

a b c

Figure 4.3.12 – Repair of cracks with epoxy compositions: a – surface preparation; b – application of epoxy mixture; c – covering of epoxy mixture with a fabric overlay; 1 – detail; 2 – layer of epoxy mixture; 3 – fabric overlay; 4 – polyethylene roller

Plastic welding is a technological process for obtaining an inseparable connection of parts or structural elements made of plastic, based on diffusion-rheological or chemical processes that occur in the area of the surfaces to be joined, with or without heating and mechanical action. As a result of welding, the initial interface between the surfaces disappears, turning into an interphase layer with a homogeneous or heterogeneous chemical structure.

To restore plastic materials of automobile parts, manual compressed air heaters and filler materials from thermoplastic plastics are used (Fig. 4.3.13).

All welding machines allow for precise temperature control and changing nozzles for supplying filler material. Filler materials are manufactured in the form of rods or tapes of various sizes.

Such welding machines are also used to remove decorative and other elements of a car.

Special equipment is used to restore plastic parts: scrapers for cleaning the surface; rolling rollers; various attachments.

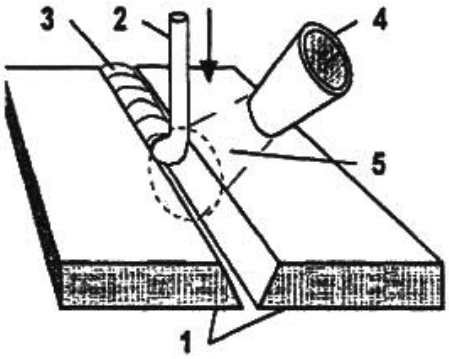

Figure 4.3.13 – Plastic welding: 1 – welding parts; 2 – filler material; 3 – weld; 4 – heater nozzle; 5 – jet of heated compressed air

4.3.5 Restoration of parts by cutting

Metal cutting is the process of separating a metal layer from a workpiece with cutting tools in order to obtain a part of the required shape, exact dimensions and appropriate surface roughness.

Cutting is divided into roughing, roughing, semi-finishing and finishing. To obtain precise dimensions and minimal surface roughness, fine machining is used. Large forgings and castings of the 3rd accuracy class are subject to roughing. Roughing is used for workpieces that are subject to roughing.

Semi-finishing is used when the entire allowance cannot be removed during roughing or when increased requirements are made to the accuracy of the geometric shapes of the workpiece. With semi-finishing, 9...10th accuracy quality and surface roughness Ra 50...12.5 microns are obtained.

Finishing is used both as a final and intermediate treatment for subsequent treatment. It provides 9th...8th accuracy grade and surface roughness Ra 12.5...2.5 microns.

Fine machining with cutters is used as a method of final treatment of external and internal cylindrical surfaces, replacing grinding, and is carried out at high cutting speeds, small cutting depths (0.05...0.5 mm) and small feeds (0.05...0.15 mm/rev.) on special machines.

To perform cutting, the workpiece and the cutting tool must perform certain movements relative to each other, which are divided into main (working) and auxiliary. The main movements are used to remove chips, and the auxiliary movements are used to prepare this process (tool feed).

The main movements are divided into the main movement and the feed movement. The main movement removes chips, and the feed movement allows the cutting process to be extended to the unprocessed areas of the workpiece.

In metal-cutting machines, two main types of main motion are used - rotational and reciprocating. The main motion can be given to the workpiece (lathes) or to the cutting tool (milling, drilling).

Turning (Fig. 4.3.14). The main motion with a speed v is the rotation of the workpiece around its axis, and the feed motion is the translational movement of the cutter 1 relative to the workpiece 2 (along the axis of the latter, perpendicularly or at an angle to it). Turning can be used to machine cylindrical, conical external and internal surfaces, end surfaces, and also to cut threads.

Drilling. When drilling holes, the main movement is the rotation of the tool 1, and the feed movement is the movement of the tool along its axis. This method is used to form holes in solid material or to increase the size of an existing hole. It can be performed on drilling, turning, milling machines.

When drilling holes on lathes, the main movement is the rotation of the workpiece, and the feed movement is the movement of the drill along the axis. To obtain more accurate holes after drilling, they can be processed by countersinking, boring and reaming.

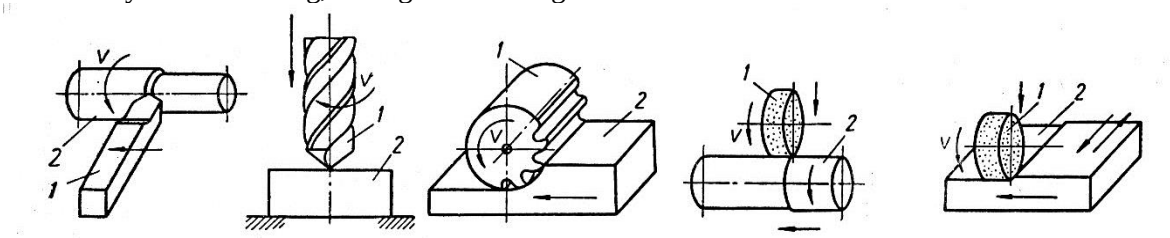

a b c d e

Figure 4.3.14 – Diagrams of the main methods of metal cutting

Milling. When milling, the main movement is the rotation of the milling cutter 1, and the feed movement is the translational movement of the workpiece 2 or milling cutter. Using a variety of milling cutters and machines, you can process various surfaces: planes, curved surfaces, grooves, etc.

Grinding. The main movement during grinding is the rotation of the grinding wheel 1. The feed movement during grinding is a combined one, consisting of several movements. For example, in circular external grinding, it consists of the rotation of the part 2, the longitudinal movement of the part relative to the grinding wheel and the periodic transverse movement of the grinding wheel relative to the part. The most common grinding methods are: circular external grinding; circular internal grinding and flat grinding.

The cutting tool in the process of removing the tape is under the influence of high pressures and temperatures. Therefore, very high requirements are imposed on the materials from which the cutting part of the tools is made. These materials must have the following properties:

- hardness exceeding the hardness of the processed material;
- high resistance to wear;
- high heat resistance;
- significant mechanical strength and sufficient toughness.

Main tool materials:

- carbon tool steel;
- alloy tool steels;
- high-speed steels;
- hard alloys;
- mineral-ceramic materials.

The cutting part of the most productive modern cutting tools is equipped with metal-ceramic hard alloys. They are used to equip the cutting part of cutting tools in the form of plates. These are alloys, the starting materials for which are metal powders (tungsten, titanium, tantalum, etc.), and the production technology is similar to the technology for manufacturing ceramic products. Divided into three groups:

Mineral ceramics have the best cutting properties, higher hardness, heat resistance and other properties. The basis of these materials is aluminum oxide, from the powder of which plates of the required size and shape are made by pressing with subsequent heat treatment. The main advantage of mineral ceramics is high heat resistance (about 1200 ^{0}C) and resistance to wear. At the same time, mineral ceramics have high fragility and weak resistance to bending loads.

For the manufacture of abrasive tools, artificial materials are used: electrocorundum (crystalline aluminum oxide Al_2O_3), carborundum (silicon carbide SiC), synthetic diamond, elboron, etc.

Electrocorundum is obtained from alumina by melting in electric furnaces. Tools made of this material are mainly used for processing hardened and thermally untreated steel, malleable cast iron, bronze, etc.

Carborundum is obtained in electric furnaces from a mixture of anthracite and quartz sand. Compared to electrocorundum, this material has higher hardness and lower viscosity. Black silicon carbide, which contains at least 95% SiC, is used for grinding cast iron, brass, bronze, and aluminum alloys. Green silicon carbide, which contains at least 97% SiC, is used for processing tools made of cermet alloys.

After smelting, electrocorundum and carborundum are crushed and grinding powders, grinding grains and micropowders are obtained.

Synthetic diamonds are obtained from graphite at a temperature of about 2500 ^{0}C and pressures of more than 104 MN/m^2. Tools made of this material are used for final grinding and fine finishing. Powders and pastes made of synthetic diamonds are also used for finishing work.

Elbor is cubic boron nitride, which is obtained at a pressure of more than 105 MN/m^2 and a temperature close to 1700 ^{0}C. Its hardness is close to that of diamond, but in some properties elbor exceeds it. Some types of metals are better processed by elbor compared to artificial diamond.

An important characteristic of an abrasive tool, on which the productivity and quality of processing depend, is the grain size of the abrasive material, which characterizes the size of the grains of the abrasive. Abrasive grains are divided into 26 grit sizes. Larger grains, marked with grit numbers from 200 to 16, are called grinding grains, smaller ones – from 12 to 3 – grinding powders and the smallest ones – M 40 to M 5 – micropowders. Tools made from coarser grits are used for rough and rough grinding, medium grits – for fine grinding and very fine grits – for particularly fine work.

Lubricating and cooling fluids have a great influence on cutting and the quality of the machined surface. Sometimes solids are added to lubricating and cooling fluids: soap and paraffin powders, bitumen, wax, graphite, molybdenum disulfide, soda, etc.

Lubricating and cooling fluids have the following influence on the cutting process:

- lubricate and cool the cutting tool, the layer being machined and the surface of the workpiece;
- reduce the deformation of the workpiece;
- prevent the tool from seizing with chips, the formation of growths, which leads to a decrease in surface roughness.

Lubricating and cooling fluids are divided into cooling and lubricating fluids.

Coolants must have high thermal conductivity, heat capacity and low viscosity. Water-based fluids - emulsions - have the best cooling capabilities. Emulsions are obtained by dissolving soap solutions and organic acids in mineral oils in water. Coolant fluids are used in rough machining of metals.

In finishing, when it is necessary to obtain a precise surface with low roughness, fluids with high lubricating properties (mineral and vegetable oils, kerosene) are used.

4.3.5.1 Main operations performed on thread-cutting lathes

The following operations are performed on thread-cutting lathes: machining of cylindrical surfaces; machining of conical surfaces; machining of planes, grooving and cutting; machining of shaped surfaces. In addition, it is possible to cut threads with a cutter and grind flat spiral grooves. To perform these operations, different types of cutters are used: left and right, straight and bent, through, undercutting, cutting, boring, threading, shaped, groove. Types of turning cutters are shown in Fig. 4.3.15.

Cylindrical surfaces are machined by longitudinal movement of the support. External cylindrical surfaces are machined with through cutters, and internal ones with boring ones. Fixtures for securing workpieces are selected depending on their shape and size.

Surface machining, grooving, and cutting are performed by providing transverse feed to the cutters. Surfaces are machined with through or undercut cutters. When undercutting the end face of a part installed in centers, a rear center with a cutout is often used. Grooves are machined with grooving cutters. Cutting is performed with parting cutters.

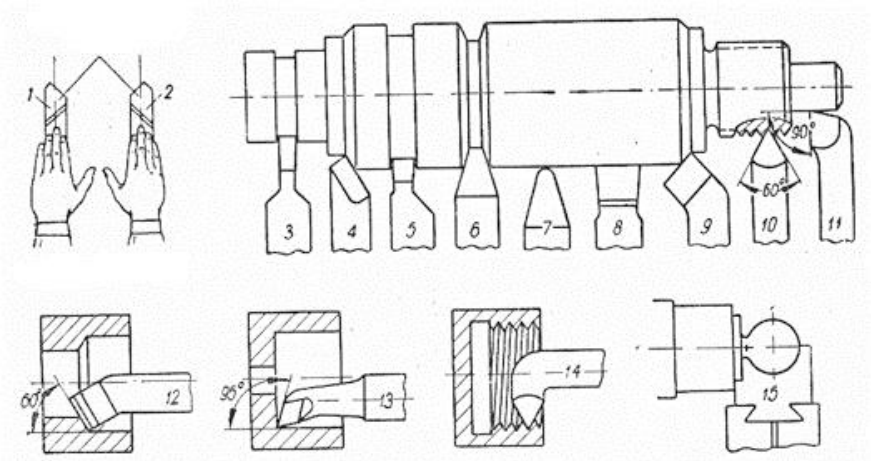

Figure 4.3.15 – Types of turning cutters: 1 – left cutter; 2 – right cutter; 3 – parting cutter; 4 – straight through cutter; 5 – rectangular groove cutter; 6 – trapezoidal groove cutter; 7 – finishing cutter with a rounded top; 8 – finishing cutter with a straight edge; 9 – bent through cutter; 10 – threaded cutter for cutting external threads; 11 – stop through cutter; 12 – boring cutter for through holes; 13 – boring cutter for blind holes; 14 – threaded cutter for cutting internal threads; 15 – cutter for machining shaped surfaces

4.3.5.2 Main operations performed on drilling machines

During work on drilling machines, the cutting tool – drills, countersinks, reamers – rotates around its axis and performs the main movement, and the movement of this tool along the axis is the feed movement.

Drilling machines perform drilling, reaming and boring holes, countersinking, reaming, countersinking, tapping and thread cutting (Fig. 4.3.16).

Drilling is one of the most common methods of obtaining cylindrical holes in solid material using drills both along the marking and along the conductor (Fig. 4.3.16 a). Drilling as a finished operation is performed when the accuracy does not exceed 4–5 classes.

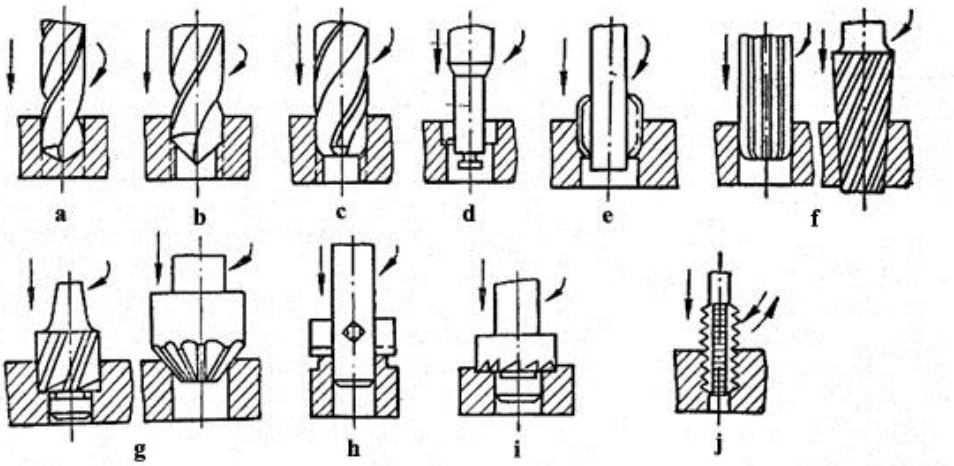

Figure 4.3.16 – Main types of drilling operations: a – drilling; b – reaming; c – countersinking; d, e – boring holes; f – reaming; g – countersinking; h, i – countersinking; j – thread cutting

Boring is the process of increasing the diameter of existing holes with a drill (Fig. 4.3.16 b).

Countersinking is the process of machining cylindrical holes with a countersink to give them the correct geometric shape, the required dimensions and the required surface cleanliness (Fig. 4.3.16 c). It provides high machining accuracy (up to the 10th grade) and surface roughness within Ra 3.2…6.2 microns.

Boring holes is carried out with cutters in cases where their axes must be located at precise coordinates (Fig. 4.3.16 d, e).

Reaming is the process of final machining of holes by reaming in order to give them precise dimensions and high surface cleanliness (Fig. 4.3.16 f). It provides machining accuracy up to the 5th-7th grade and surface roughness within Ra 1.25…0.63 microns.

Countersinking is the process of obtaining cylindrical or conical recesses in pre-drilled holes for the heads of bolts, screws, and other parts using cylindrical and conical countersinks (Fig. 4.3.16 g).

Counterboring is the processing of end surfaces for nuts, washers, rings with plates or end countersinks (Fig. 4.3.16 h, i).

Thread cutting in holes is carried out with taps (Fig. 4.3.16 j). In the process of thread cutting in blind holes, the machine must have a device for reverse rotation of the spindle to unscrew the tap from the hole.

In addition to these works, drilling machines perform reaming of holes (smoothing of roughness) with special roller mandrels after finishing, grinding of internal grooves of various shapes, processing of multifaceted holes, etc.

The following main types of drills are distinguished:

- feather, used for drilling holes in hard alloy parts and for machining stepped holes;
- spiral;
- deep drilling drills, used for drilling holes with a diameter of up to 80 mm, the depth of which exceeds the diameter by 5 or more times;
- centering, used to obtain center holes, which are machined in centers on lathes;
- ring drilling drills, used when drilling deep holes with a diameter of 90 to 200 mm.

Depending on the purpose, the following main types of countersinks are distinguished:

- spiral, used for machining through cylindrical holes;
- cylindrical, used for machining end faces or holes for cylindrical screw heads;
- conical, used for countersinking conical recesses, center holes, chamfering in cylindrical holes.

Clamping bars, prisms, machine vices, and squares are used as devices for securing parts.

4.3.5.3 Main operations performed on milling machines

Milling is a cutting process in which the cutting tool (milling cutter) performs a rotational motion, and the workpiece being machined performs a translational or feed motion. A milling cutter is a cutting tool that is a body of rotation, on the generating or end surface of which, or on both of these surfaces, cutting teeth are located.

Depending on the direction of rotation of the milling cutter and the feed direction, there are counter milling, when the workpiece to be processed is fed against the rotation of the milling cutter, and parallel milling - when the direction of rotation of the milling cutter and the feed direction coincide.

Depending on the shape and purpose, milling cutters are divided into: cylindrical; end; end; disk; cutting and slotting; angular; shaped.

Milling machines process horizontal (Fig. 4.3.17), vertical and inclined planes, shaped surfaces, and mill grooves, keyways, and gear teeth.

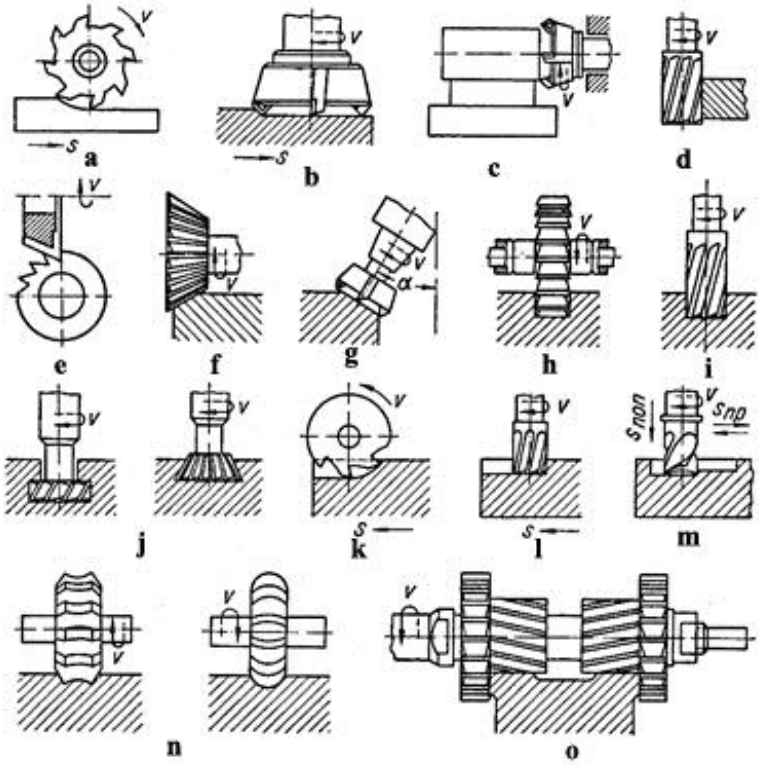

Figure 4.3.17 – Examples of work performed on milling machines: a, b – machining of horizontal planes; c, d – machining of vertical planes; e, f – machining of inclined planes; g, h – making rectangular grooves; i, j – making T-shaped grooves and dovetail grooves; k, I, m – milling of keyways; n – machining of shaped surfaces; o – milling of complex surfaces

Horizontal planes are machined with cylindrical cutters on horizontal milling machines or with end mills on vertical milling and longitudinal milling machines. The most productive is the machining of planes with end mills equipped with carbide inserts (Fig. 4.3.17 a, b).

Vertical planes are machined on horizontal milling machines with end or disk cutters, on longitudinal milling machines with end mills and on vertical milling machines with end mills (Fig. 4.3.17 c, d).

Inclined planes are machined on horizontal milling machines with angle cutters (Fig. 4.3.17 e), or on vertical milling machines with end mills (Fig. 4.3.17 e, f).

Rectangular grooves are milled with disk cutters on horizontal milling machines or with end cutters on vertical milling machines (Fig. 4.3.17 g, h).

T-shaped and dovetail grooves are milled on vertical milling machines with cutters of the appropriate profile (Fig. 4.3.17 i).

Keyways of rectangular cross-section are machined on vertical milling machines with end cutters (Fig. 4.3.17 j) or special key cutters (Fig. 4.3.17 k), or on horizontal milling machines with disk cutters (Fig. 4.3.17 i).

Shaped surfaces are machined with shape cutters of the appropriate profile on horizontal milling machines (Fig. 4.3.17 n, o).

The same devices are used to secure parts as for drilling machines.

4.3.5.4 Main operations performed on grinding machines

Grinding is the process of treating surfaces with an abrasive (grinding) tool, most often grinding wheels. Grinding bars, skins, and sometimes grinding materials in the form of powders and pastes are also used.

When grinding, the accuracy of processing of 5–7 qualities and surface roughness Ra 1.25…0.08 μm are achieved.

Grinding is most often used for final finishing and is the main method of obtaining high accuracy and low roughness of the treated surfaces. Grinding can be used to process various materials, both very soft and the hardest.

On cylindrical grinding, centerless grinding, internal grinding and surface grinding machines, external (Fig. 4.3.18) and internal cylindrical surfaces, as well as flat surfaces, are ground. Grinding wheels are used as a tool, the main characteristics of which are the type of abrasive material, bond, hardness, grain size and structure. The grinding wheel is selected depending on the material of the workpiece and the hardness of its surface layer. For steel parts, corundum wheels on a ceramic bond are mainly used. For heat-resistant, heat-resistant materials, diamond wheels on a metal base are more often used. The grain of the abrasive in the wheel depends on the required surface roughness, and is selected according to reference books. Cutting modes depend on the type of grinding (circular, flat, centerless, etc.) and the requirements for surface roughness.

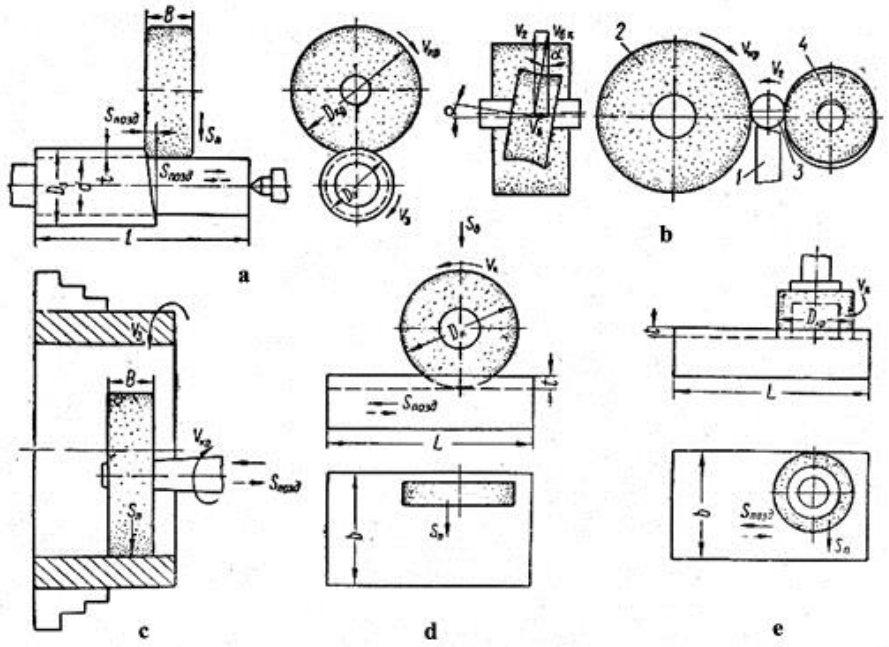

Figure 4.3.18 – Schemes of circular and flat grinding: a – circular external grinding; b – external centerless grinding; c – internal grinding; d, e – flat grinding of the periphery and end of the circle

Grinding can be preliminary, final and fine. With preliminary grinding, the process can take place in several operations. The allowance for single-operation grinding is 0.2…0.6 mm, with two-operation grinding – 0.6…0.8 mm. During fine grinding, a small allowance can be removed – up to 0.04…0.08 mm.

To ensure the reliability of the grinding process, intensive cooling with a well-profiled liquid, adherence to recommended cutting modes, and timely dressing and balancing of the abrasive wheel are important.

4.3.5.5 Main operations performed on boring machines

Boring machines process holes, as well as perform operations such as turning ends, milling flat and shaped surfaces, etc.

Boring machines are divided into:

- universal horizontal boring;
- coordination boring;

- diamond boring;
- special boring.

The following operations can be performed on horizontal boring machines: drilling, countersinking, and reaming holes (Fig. 4.3.19 a), boring large diameter holes (Fig. 4.3.19 b), boring several holes simultaneously with cutters fixed in the side bar (processing of main bearings of the cylinder block) (Fig. 4.3.19 c), turning and milling end surfaces (Fig. 4.3.19 d, e), milling planes and shaped surfaces with a set of milling cutters (Fig. 4.3.19 f).

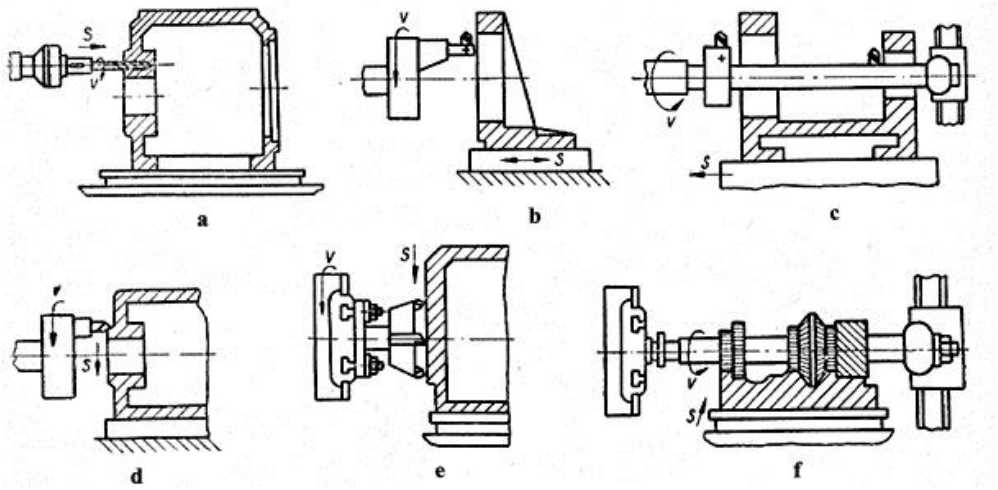

Figure 4.3.19 – Operations performed on boring machines

Diamond boring machines are designed for fine boring of holes with diamond or carbide cutters in parts. When processing parts on these machines, high cutting speeds (100…1000 m/min), low feeds (0.01–0.1 mm/rev) and small cutting depths (0.1–0.01 mm) are used. At the same time, they achieve an accuracy of 0.003–0.005 mm.

Boring cutters are equipped with carbide, diamond, elboron and other cutting inserts with high wear resistance.

Fine boring is widely used for processing precise holes for sliding and rolling bearings, gearbox holes, rear axles, connecting rod holes, cylinder liners, etc.

Vertical diamond boring machines are used when restoring cylinder liners of car engines.

The main difficulties in boring cylinder liners are the correct positioning of the block and liner on the machine. Another disadvantage of boring is the formation of a defective layer - crushed and crushed grains of cast iron (the liner surface acquires a matte light gray color). Therefore, after boring, the engine resource becomes several times less. This disadvantage is corrected to some extent by the honing operation.

4.3.5.6 Honing

As a final operation in the repair of cylinder liners and some other parts, honing is used (Fig. 4.3.20), which is a method of final processing of holes with abrasive bars fixed in a special head (Fig. 4.3.20, a). This method is used after boring or grinding.

In repair production, various honing schemes are used. Flexible spring-loaded mounting of bars on the honing head provides good surface cleanliness, but does not correct deviations from cylindricity and does not allow removing a large (more than 0.1 mm) allowance. Honing heads with a rigid bar feed provide removal of larger layers of metal, better surface quality and the ability to correct the shape of the surface of the part. During honing, the combs remaining from the previous processing are cut off and the allowance (0.01…0.12 mm) is removed. The head with the bars rotates, simultaneously moving back and forth along its axis. As a result of adding two movements, the honing head moves along a helical line and a characteristic grid is formed on the treated surface (Fig. 4.3.20, b), which represents traces of abrasive grains (scratches), in the recesses of which oil is well retained, for better running-in of parts, after repair.

The depth of the scratches should be 10...20 microns. In some cases, it is necessary to strive to create even deeper scratches during honing. Thus, in the event of an increase in oil consumption, lubrication conditions will be significantly improved.

The angle of opening of the scratches (depth) is of great importance for oil retention. At a large angle of opening of the scratches, the oil can move away or be poorly retained on the surface of the cylinder liner,

and at a small angle, due to surface tension forces, it can protrude above the surface, thereby ensuring better lubrication of the surfaces. The profile of the angle of opening of the scratches depends to a greater extent on the characteristics of the abrasive bars.

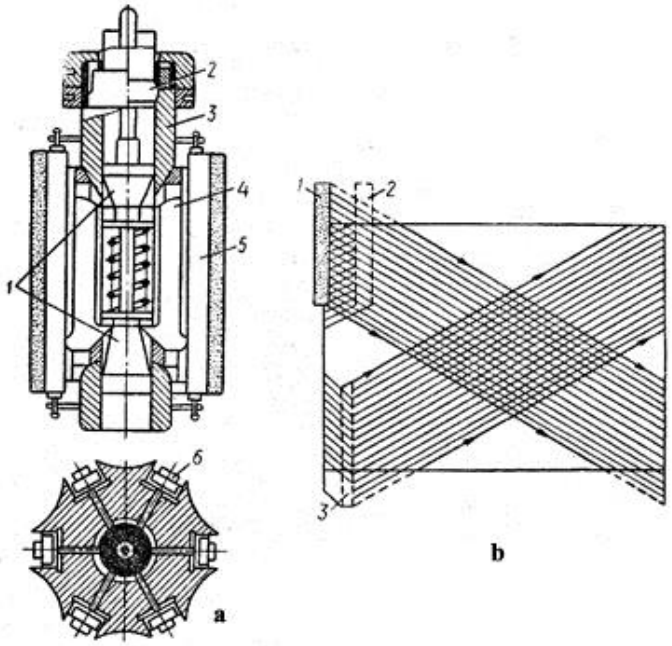

Figure 4.3.20 – Honing of cylinder liners: a – diagram of the honing head: 1 – sliding cones; 2 – hinge; 3 – housing; 4 – thrust plate; 5 – bar holder; b – traces of processing after honing in one double stroke of the head on the expanded surface of the cylinder

Another important parameter of the liner surface is the honing angle, that is, the angle between the lines. A small angle between the lines increases dry friction and wear, and a large angle increases oil consumption. The optimal honing angle is 60…750.

Also, experimental data have established that the support surface of the cylinder liner should be 50…70% of the area of the lines. The depressions of the lines should contain at least 0.02 mm3 of oil per 1 cm^2.

The lines on the cylinder surface are obtained with honing bars at the stage of initial and final processing. But such a surface still has many sharp protrusions. Therefore, in order to reduce the wear of the cylinders and rings, it is necessary to additionally process the cylinders with fine-grained bars or special brushes, while after processing flat support planes will remain. This method of honing is called flat-top honing.

During honing, the treated surface is intensively watered with a lubricating and cooling liquid, which not only cools the surface, but also helps to remove metal chips and products of the bars' wear from it. Kerosene or a mixture of kerosene and mineral oil is used as a lubricating and cooling liquid during honing.

Honing bars should be made of electrocorundum or carborundum. It is not advisable to use diamond bars, as they provide the greatest penetration of abrasive particles into the sleeve, which are very difficult to remove during washing.

Also, instead of abrasive bars, special abrasive brushes are widely used. They are made of steel wire or nylon threads coated with ceramic material (silicon carbide), and brushes with small steel balls at the ends of the fibers. They perform flat-top honing, clean the sleeve from residues of the honing abrasive, significantly increase the yield of graphite grains to the cylinder surface, while significantly increasing the engine's service life.

An important feature of honing machines is the ability to tilt the cylinder blocks, which is necessary for V-shaped engines, or the ability to use special machines for this task.

In some cases, it is possible to abandon cylinder boring. For example, when the repair size does not exceed 0.5 mm. For this purpose, there are specialized honing heads with a rigid feed of abrasive bars to the clamp. Such honing heads provide correction of cylinder ovality and taper.

4.3.5.7 Superfinishing, microfinishing, polishing and lapping

Another final finishing operation is superfinishing and microfinishing.

Superfinishing is the process of finishing after grinding parts such as shafts using a special head with diamond or abrasive bars.

In the superfinishing process, metal is removed from the surface of the rotating part 2 by diamond or fine-grained abrasive bars 1 (grain size M20), which continuously move back and forth along the forming machining surface. The amplitude of the bars is 3…6 mm, the frequency of oscillation is 500…800 min-1, the cutting speed does not exceed 2.5 m/min.

The essence of the superfinishing process is the microcutting of the machining surface simultaneously with a large number of fine abrasive grains (100…1000 grains/mm^2). Metal removal occurs in the form of thin chips (0.1…0.5 microns).

The work is carried out with intensive lubrication. At the beginning, when there are sharp ridges on the surface, the oil film breaks through under the pressure of the abrasive bars and the ridges are cut. When they are smoothed, the oil forms a continuous film, the pressure of the bar does not have the strength to break it and cutting stops.

The lubricating and cooling fluid used during superfinishing is a mixture of kerosene with spindle oil (20…30 %). During processing, a very thin layer of metal (0.005…0.02 mm) is removed and minimal roughness is ensured.

In addition to increasing accuracy and reducing roughness, the superfinishing process deforms the surface layer of metal (1.0…1.5 microns), strengthens it by 15…30 %.

Microfinishing is a type of superfinishing and its development and is characterized by high pressures on the bar and their rigid fixation, which significantly improves the processing process. This method is used when processing crankshaft and camshaft journals, plunger pairs, gearbox shafts, etc.

Polishing and lapping are also used as a final finishing operation to reduce surface roughness. These processes provide the lowest surface roughness (Ra 0.012 μm). The geometric shape of the treated surfaces does not change. Polishing is done with felt, felt or fabric wheels using pastes consisting of chromium oxide, oleic acid, kerosene, stearin. During polishing, the metal is quickly oxidized under the influence of active chromium oxide, when the polishing wheel moves, it repeatedly removes the oxide film, while the ridges are removed from the surface of the part, which characterize the surface roughness.

Lapping is used to have precise dimensions of parts by removing a very small allowance or to achieve a tight fit of the surfaces, which ensures hydraulic impermeability of the connection. Lapping is a cutting process with abrasive grains that are between the surfaces of the lapping and the part. Rotating during the lapping process, the abrasive grains are cut from the surfaces of micro-irregularities. The dimensional accuracy during lapping is 0.1 μm. The following lapping materials are used: corundum, carbo-corundum, or emery powder, silicon carbide, etc. Abrasive powders with different grain sizes are used: coarse – M28, M20 with a grain size of 28...14 μm and fine - M10, M7 with a grain size of 10...5 μm. To speed up lapping, it is started with coarse-grained powders, and to achieve the required surface roughness, the treatment is finished with fine-grained powders. During lapping, machine oil, kerosene, gasoline, and other lubricating fluids and their mixtures are used.

4.3.5.8 Electrochemical-mechanical processing methods

There are methods of mechanical processing based on mechanochemical effects. These are cutting with anodic etching of the surface under the action of direct current (electrochemical grinding, honing, polishing), plastic deformation under the action of electric current (electromechanical processing), cutting under the action of a magnetic field (magnetoabrasive polishing), etc. These processing methods are used for processing difficult-to-process, brittle, hard alloys and materials.

Electrochemical processing is used as a method of electrochemical polishing. It is based on the phenomena of anodic dissolution when direct current passes through an electrolyte solution. The part is installed on the anode of an electrolytic bath and when current passes on its surface, a protective film of salts is formed. Due to the fact that the electron flux density is higher at the crests, their dissolution occurs faster than the metal in the depressions, due to which the surface of the part is smoothed.

Electrospark and electropulse machining is based on the destruction of the material under the action of a spark discharge. When metal electrodes approach each other, a short-term powerful spark discharge occurs

with temperatures of 4000–11000 ^{0}C. This results in concentrated energy release. Electrospark machining is used to process holes in difficult-to-machine materials.

Anodic-mechanical machining is based on the simultaneous action of electromechanical and electrospark processes that occur in an electrolyte environment. When a direct current is passed through a bath, a film of metal dissolution products is formed on the surface of the part - the anode, which is removed mechanically when the tool - the cathode moves. This method is effectively used when cutting difficult-to-machine metals.

During ultrasonic processing, the workpiece is hit by abrasive particles suspended in the liquid, which receive high speeds from a vibrator that oscillates at an ultrasonic frequency (20,000–40,000 Hz). The liquid, under the influence of ultrasonic vibrations due to the phenomenon of cavitation, destroys the material on which it falls. The abrasive action occurs at high speed and the processing process is carried out quite intensively. This method is used for processing some brittle, difficult-to-process materials.

REFERENCES

1. Zakharchuk, V. I., Zakharchuk, O. V., Halushchak, D. O., & Halushchak, O. O. (2021). Method for selecting the technology of parts restoration. *Perspektyvni Tekhnolohii ta Prylady*, (18), 61–66.

2. Ahieiev, M., Gritsuk, I., Litikova, A., Bilousov, I., Vrublevskyi, R., Boboshko, O., Smyrnov, O., Saraieva, I., Khudiakov, I., & Pohorletskyi, D. (2021). Application of combined electric arc coatings for parts and units of vehicles recovery in repair technologies. *SAE Technical Paper Series*. https://doi.org/10.4271/2021-01-5100.

3. Liashenko, B. A., Ahieiev, M. S., Volkov, V. P., Zakharchuk, O. V., & Ustintsev, S. M. (2021). Pobudova metodolohii optymalnoho vykorystannia bahatooperatsiinykh tekhnolohii vidnovlennia ta zmitsnennia poverkhon detaliei sudnovykh mekhanizmiv v protsesi remontu [Development of a methodology for the optimal use of multi-operation technologies for restoration and strengthening of ship mechanisms surfaces during repair]. *Visnyk Pryazovskoho Derzhavnoho Tekhnichnoho Universytetu*, (43), 191–202.

4. Mateichyk, V., Ahieiev, M., Mościszewski, J., Ustincev, S., Volodarets, M., & Kovbasenko, S. (2023). The use of additive technologies for the restoration and strengthening of parts of transport means. *Transportation Research Procedia*, *74*, 592–599. https://doi.org/10.1016/j.trpro.2023.11.186.

5. Zakharchuk, O. V. (2017). *Osnovy tekhnolohii vyrobnytstva ta remontu avtomobiliv: navchalnyi posibnyk dlia studentiv vyshchykh navchalnykh zakladiv*. Lutsk: RVV Lutsk National Technical University.

6. Zakharchuk, O. V. (2015). *Tekhnichne obsluhovuvannia i remont ATZ: navchalnyi posibnyk dlia studentiv vyshchykh navchalnykh zakladiv*. Lutsk: RVV Lutsk National Technical University.

7. Ludchenko, O. A. (2004). *Tekhnichne obsluhovuvannia i remont avtomobiliv: orhanizatsiia i upravlinnia*. Kyiv: Znannia.

8. Fornalchyk, Ye. Yu., Oliskevych, M. S., Mastykash, O. L., & Pelo, R. A. (2004). *Tekhnichna ekspluatatsiia ta nadiinist avtomobiliv*. Lviv: Afisha.

9. Bozhydarnik, V. V., & Husiev, A. P. (2007). *Osnovy tekhnolohii vyrobnytstva i remontu avtomobiliv*. Lutsk: Nadstyria.

10. Husiev, A. P. (2008). *Tekhnolohichni osnovy mashynobuduvannia*. Lutsk: Nadstyria.

Chapter 5 Organization and management of road transport

The organization and management of road transport are important components of the effective functioning of the transport industry as a whole. The level of organization of production processes, the clarity of management decisions and compliance with quality standards determines the safety of transportation, reliability of equipment, timely delivery of goods and passengers, as well as the economic efficiency of road transport enterprises.

This section examines the main types of road transport enterprises, their structure and functions. Particular attention is paid to the organization of production processes, planning and management methods, as well as quality control systems. The material is presented taking into account modern requirements for the digital transformation of the transport industry, the implementation of automated management systems, environmental sustainability and international standards.

The purpose of the section is to form in students a holistic understanding of the basics of organizational and production activities of road transport enterprises, mastering the conceptual and terminological apparatus and acquiring practical knowledge of managing production processes in road transport.

5.1 Road transport enterprises

The field of road transport covers a wide range of enterprises that ensure the functioning, maintenance, development and infrastructure support of road transport. Such enterprises include not only road transport companies that directly transport goods and passengers, but also technical, infrastructure, service and production enterprises, which together form a single road transport ecosystem.

Classification of road transport enterprises

In general, road transport enterprises are divided into the following main categories:

– road transport enterprises: they are directly engaged in the organization and implementation of passenger and freight transportation. Types: freight, passenger, specialized, international transport operators. In modern conditions, telematics systems, electronic logistics, and automated fleet management are being actively implemented;

– car repair and service companies: perform diagnostics, maintenance, current and major repairs of cars. Can be universal or specialized by brands, types of services or types of transport. They include both specialized service stations (by brand or type of work) and comprehensive auto repair companies. In leading countries, the concept of “automotive service 4.0” is being actively implemented - using digital platforms, robotic diagnostic lines, augmented reality for craftsmen. In world practice, certified service networks (for example, Bosch Car Service, AD Garage) that operate according to uniform technological standards are widespread;

– gas stations (GAS) and charging stations (ECS): provide the supply of fuels and lubricants and energy. The global trend is the development of electric charging infrastructure, integration with mobile payment systems and environmental monitoring;

– bus stations, logistics centers and terminals: provide passenger and cargo services, function as elements of transport infrastructure. In the EU and the USA, networks of high-speed electric charging hubs (for example, IONITY, Tesla Supercharger) with integrated service zones are actively developing. In modern conditions, they are developing as multimodal hubs that combine various types of transport, services, and communications; Modern bus stations are being transformed into transport and service complexes with digital information systems, comfort zones, and inclusive infrastructure.

– automobile plants and manufacturing enterprises: produce cars, trailers, components and assemblies. In the context of sustainable development, there is a transition to global supply chains, modular production and industry 4.0;

– technical control and certification companies: they carry out technical condition checks, vehicle certification, and environmental monitoring. They operate on the basis of state accreditation or as private inspection bodies (e.g. DEKRA, TÜV in Europe);

– motels, campsites, road service complexes: serve road users — drivers and passengers during long trips. Include rest rooms, parking, sanitary facilities, cafes, car washes, sometimes — charging stations for

electric vehicles. In countries with high transit traffic (Germany, France, USA), road service complexes (rest areas, truck stops) operate, which integrate service, safety and digital infrastructure;

– insurance, finance and leasing companies in the field of motor transport: provide insurance, lending, car leasing, fleet management. They are increasingly using intelligent insurance policies (telematics insurance) and Big Data for risk assessment.

Features of the functioning of road transport enterprises.

High level of interdependence: None of the enterprises can fully function in isolation. For example, ATP requires service stations, fuel from gas stations, financing, route service from bus stations.

Integration into the digital ecosystem: In modern conditions, all types of enterprises are switching to digital document management, online service orders, GPS monitoring and real-time analytics.

Ecological transformation: Enterprises are gradually implementing ISO 14001 environmental standards, using renewable energy, minimizing harmful emissions.

Best practices

Germany and the Netherlands: A developed system of integrated transport centers that combine terminals, service areas, charging stations and offices of logistics companies.

China: Mass implementation of automated service stations with robotic posts, remote diagnostics and contactless payment.

Scandinavian countries: Focus on sustainable infrastructure: use of hydrogen, electricity, biofuels; “green logistics” standards.

USA: Widespread use of AI-based fleet management platforms, integration with transport exchanges, automated route monitoring.

Advanced global trends:

• Integration of services: the formation of transport and logistics clusters that unite several types of enterprises within a single platform or hub.

• Digital transformation: the implementation of IoT solutions, automated management systems, remote diagnostics, data exchange between infrastructure facilities.

• Sustainable development: the use of "green" technologies, hydrogen and electric energy sources, energy-efficient buildings, resource recycling.

• Service orientation: the development of customer-centric approaches, mobile applications, contactless service.

The scheme shown in Figure 5.1 allows you to visually and logically systematize the main areas of activity of enterprises in the field of road transport.

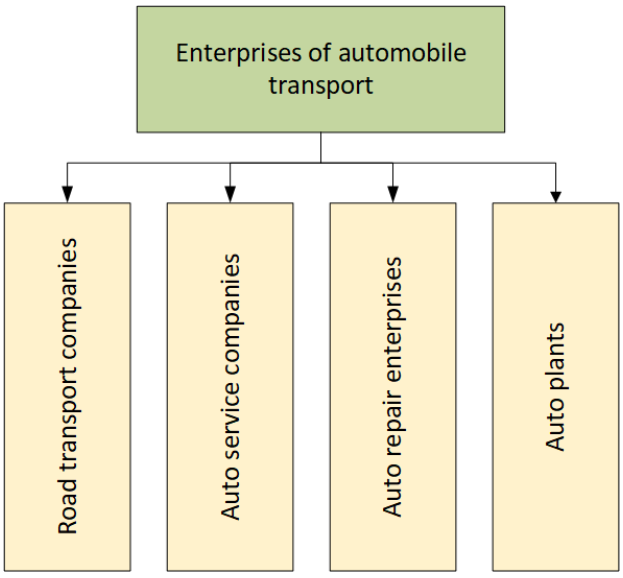

Figure 5.1 - Classification of road transport enterprises

Thus, road transport enterprises are divided into three main groups:

1. Road transport companies

– Engaged in the organization and implementation of freight and passenger transportation.

– Examples: bus fleets, convoys, freight forwarding companies, etc.

2. Auto service companies

– Provide technical maintenance, diagnostics, refueling, washing, etc.

– Examples: service stations, gas stations, car washes, tire fitting, etc.

3. Car repair enterprises

– Specialize in performing current and major repairs of automobile units and systems.

– Examples: repair plants, workshops for the repair of components, systems, units, enterprises for the restoration of parts, etc.

4. Automobile plants

– Enterprises engaged in the production, assembly or modernization of automotive equipment.

– Examples: automobile plants, electric vehicle assembly plants, special equipment plants.

Road transport enterprises constitute a complex system of interdependent objects that ensure the continuous functioning of the transport industry. Their diversity reflects the complex nature of road transport as a sphere that includes transportation, maintenance, infrastructure, production and service of people on the road. The implementation of innovative technologies, environmental standards and digital solutions are determining factors in the efficiency of modern transport infrastructure.

5.1.1 Road transport companies

Road transport companies (RTC) are the main organizational form of activity in the field of road transport. They carry out a range of activities related to the transportation of goods and passengers, maintenance and repair of vehicles, as well as the organization of logistics and related services.

The classification of road transport companies is shown in Figure 5.2.

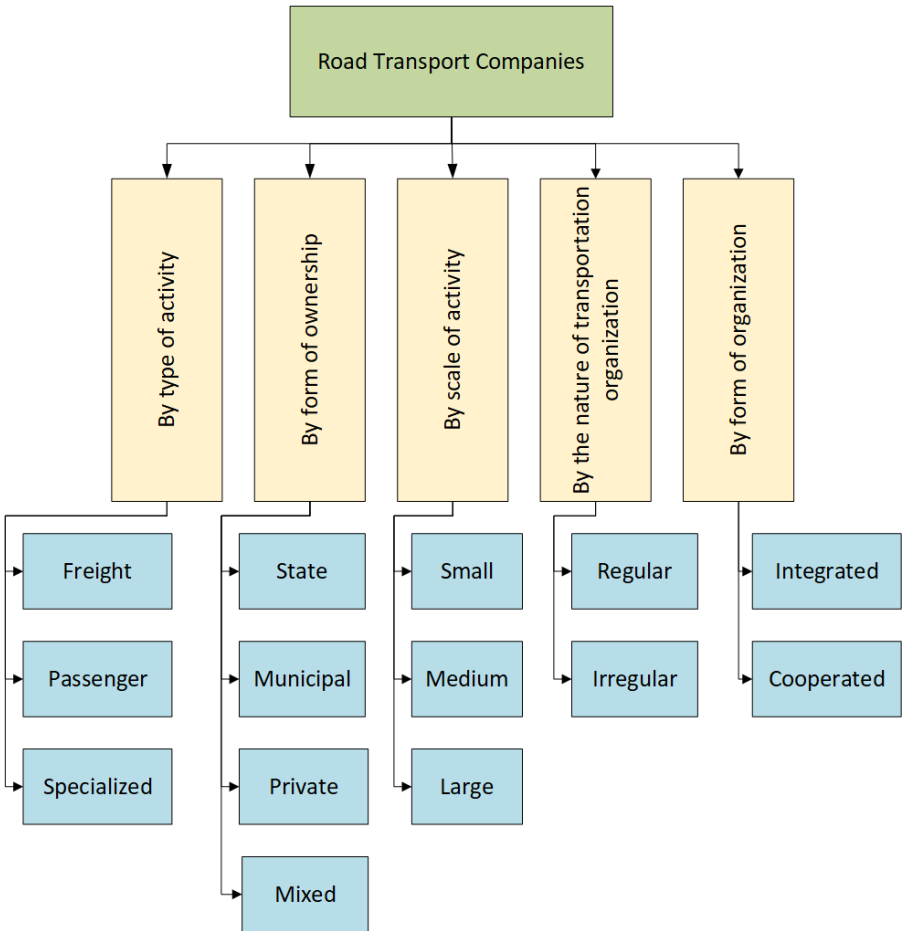

Figure 5.2 – The classification of road transport companies

RTC are classified according to the following main characteristics:

– by type of activity: freight, passenger, specialized (for example, transportation of dangerous goods, mail, funeral services);

– by form of ownership: state, municipal, private, mixed;

– by scale of activity: small, medium and large enterprises, including transnational motor transport corporations;

– by the nature of transportation organization: regular (bus routes, courier services) and irregular (flights on individual orders).

by form of organization:

1. Integrated RTC. These are motor transport enterprises that perform the entire range of transport and service functions within a single organizational structure.

Characteristic features:

the presence of all main divisions (transport, technical, dispatching, repair, etc.);

centralized management;

the full life cycle of transport maintenance at one enterprise.

Advantages:

– ease of management, a single system of responsibility, reduction of logistics costs.

2. Cooperated RTC. These are enterprises in which individual functions or divisions are transferred to other specialized organizations.

Examples of cooperation:

technical maintenance is performed by a third-party service station;

repair of units — at a specialized plant;

transport logistics — through an external dispatching center.

Advantages:

– reduction of costs for maintaining one's own infrastructure, the ability to focus on core activities.

In developed countries, networked motor transport companies are actively operating, uniting regional divisions and operating on the basis of uniform standards of management, control and service.

This classification of road transport companies allows for a better understanding of the industry infrastructure, the logic of the relationship between different types of enterprises and their role in ensuring the effective operation of motor vehicles. It is the basis for organizing processes, planning logistics systems, building a transport network and developing service infrastructure.

Functions of a road transport companies

A road transport companies (RTC) is a key entity in the road transport system, which organizes, performs and supports the transportation of passengers or goods. Its effective activity is based on the performance of a wide range of functions, covering the operational, production, management, economic and service spheres (Fig. 5.3).

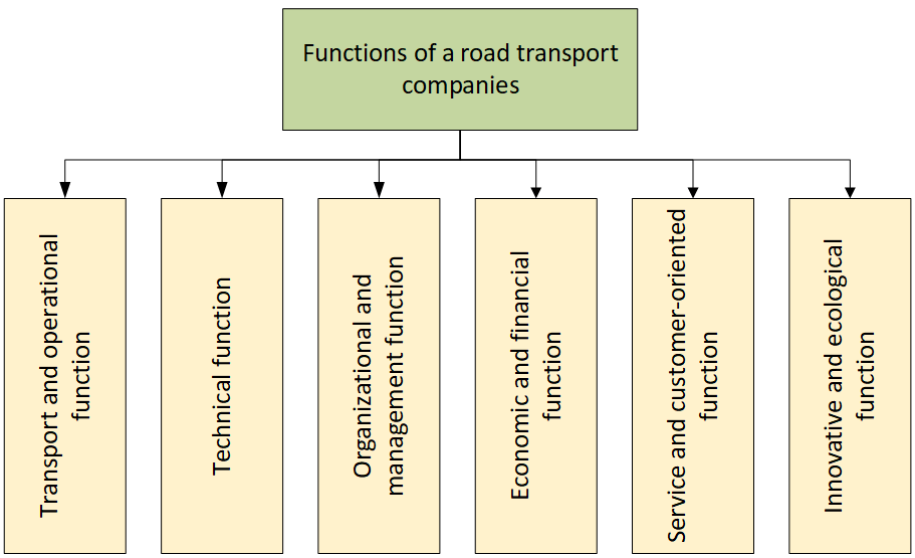

Figure .5.3 – Functions of a road transport companies

1. Transport and operational function
   – Organization of passenger or cargo transportation in accordance with contractual obligations, traffic schedules, routes and standards.
   – Planning and optimization of routes taking into account transport demand, road conditions, energy consumption and delivery time.
   – Ensuring safe, uninterrupted and efficient operation of vehicles.
2. Technical function

Conducting scheduled maintenance and current repairs of motor vehicles.
   – Ensuring reliability, serviceability and compliance of the technical condition of vehicles with regulatory requirements.
   – Keeping records of technical condition, mileage, repair history and costs of maintaining the fleet.
   – In some cases, participation in the modernization and adaptation of equipment to special operating conditions.
3. Organizational and management function
   – Creating an effective organizational structure of the enterprise.
   – Personnel management: selection of personnel, distribution of responsibilities, control, motivation and advanced training.
   – Development and implementation of traffic safety, occupational health and environmental responsibility policies.
   – Management of material and technical resources, stocks, infrastructure and information flows.
4. Economic and financial function
   – Formation of tariffs and calculation of the cost of transportation and services.
   – Accounting, cost analysis, planning of profitability of activities.
   – Optimization of the use of fuel, energy and material resources.
   – Ensuring financial stability, risk management, investment planning.
5. Service and customer-oriented function
   – Providing high-quality customer service - timeliness, accuracy, safety and convenience of transportation.
   – Working with customers: concluding contracts, informing, supporting, responding to complaints.
   – Implementation of digital services: mobile applications, GPS tracking, electronic customer accounts.
   – Increasing the level of user satisfaction with the company's services.
6. Innovative and environmental function
   – Implementation of new technologies in the field of logistics, diagnostics, fleet management.
   – Adaptation to environmental standards - reduction of emissions, introduction of alternative fuels.
   – Participation in projects on digital transformation and sustainable development of transport.

The complex of functions of road transport companies reflects its multifaceted role in the modern transport system. The successful operation of an RTC depends on a balanced combination of operational efficiency, technical reliability, managerial competence and focus on service quality. In modern conditions, digitalization of processes, compliance with international standards and implementation of innovations in the field of mobility are of particular importance.

Typical structure of a road transport company

The organizational structure of motor transport companies determines the relationships between its divisions, the functional division of responsibilities, the levels of management, and the decision-making procedure (Fig. 5.4). The efficiency of transportation, the reliability of technical operation, the quality of customer service, and the overall manageability of the enterprise depend on the clarity and rationality of the structure.

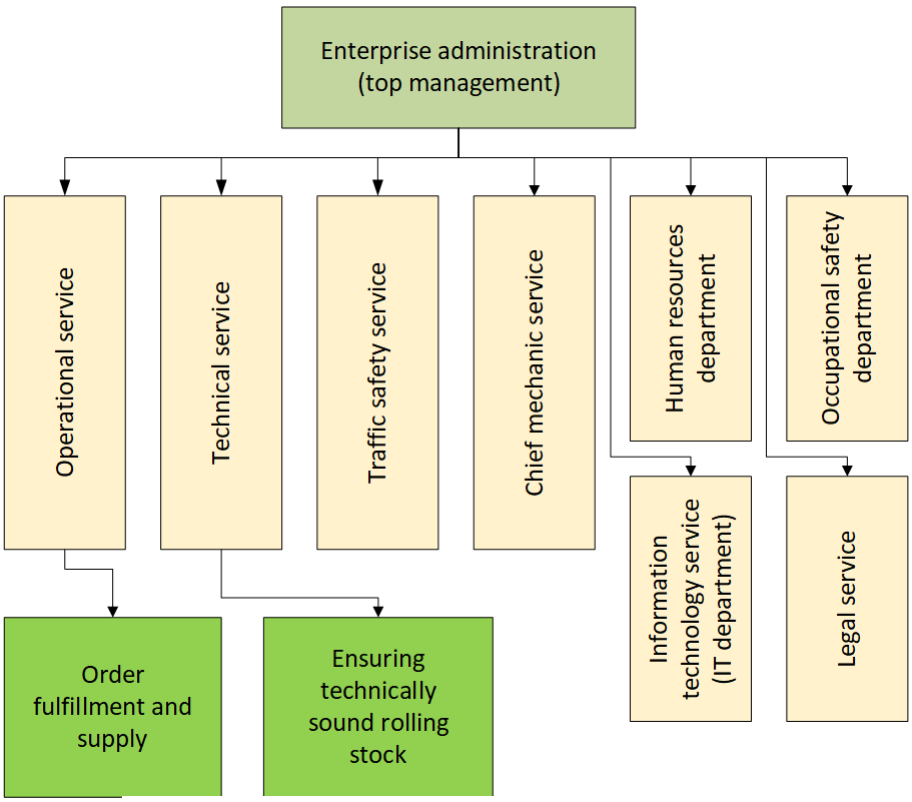

Figure 5.4 – Typical structure of road transport company

1. Enterprise administration

• Director (General Director) - carries out general management of the enterprise, is responsible for strategic planning, financial policy and external relations.

• Deputy directors (for operation, for technical part, for economics, for traffic safety, etc.) - coordinate the work of relevant services and departments.

2. Operational service

Central service, which ensures the organization of transportation:

• Vehicle operation department - forms traffic schedules, transportation plans, monitors the execution of flights.

• Dispatch service - provides operational management of vehicle traffic, communication with drivers, route adjustments.

• Planning and logistics department - optimizes routes, controls loading, coordinates logistics processes.

3. Technical service

Ensures the technical serviceability of the fleet:

• Maintenance and repair department - is responsible for carrying out maintenance, current and major repairs.

• Production and technical department – keeps records of the technical condition of vehicles, develops maintenance schedules, provides spare parts.

• Production areas (zones) – mechanical, electrical, body, tire fitting, washing, etc.

4. Chief mechanic's service – ensures the vital activity of the enterprise, maintenance and repair of buildings, structures, equipment, engineering communications

5. Traffic safety service

• Organizes accident prevention measures.

• Conducts briefings and checks of drivers' knowledge of traffic rules.

• Analyzes accidents, keeps statistics and safety reports.

6. Economic and financial service

• Planning and economic department – forms budgets, analyzes expenses and income.

• Accounting department – keeps records, prepares financial statements.

• Material supply department – controls purchases, accounting of stocks, fuel, tools.

7. Human Resources and Occupational Health Department

• Carries out the selection, admission, training and certification of personnel.
• Ensures compliance with labor legislation.
• Monitors working conditions, conducts occupational health and safety briefings.
8. Legal Department (if available)
• Supports the contractual activities of the enterprise.
• Ensures legal protection of the interests of the RTC.
9. Information Technology Department (IT Department)
• Maintains computer equipment, software, GPS navigation, dispatching systems.
• Supports corporate digital management platforms (FMS, ERP, etc.).

The typical structure of a road transport company is built on a functional principle and provides for a clear division of powers between services. In modern conditions, the effectiveness of such a structure depends on the level of automation, integration of digital systems, mobility of communications, and the ability to quickly respond to changes in transport demand and the external environment.

In modern conditions, the role of analytical departments responsible for data processing, monitoring transportation efficiency, load forecasting and optimization of logistics schemes is increasing.

Trends in the development of RTC in the world:

–In the EU, the USA, Japan and South Korea, the following leading trends in the organization of motor transport enterprises can be traced:
–Digitalization of processes - implementation of telematics, GPS monitoring, electronic fleet management systems (Fleet Management Systems).
–Turnkey services - provision of comprehensive logistics services, including delivery, cargo handling, tracking and reporting in real time.
–Sustainable development models - fleet electrification, integration with public transport, use of "green" technologies.
–Integration into global supply chains - especially for freight carriers operating within international logistics hubs.
–Leading road transport operators (e.g. DHL, DB Schenker, FedEx, Arriva, Keolis) are implementing innovative management models, including artificial intelligence for load forecasting, digital twins of enterprises, mobile applications for drivers and dispatchers.

Road transport enterprises are a dynamic component of the state's transport system. Their effective operation requires modern management, optimal structure, high level of technical maintenance and integration with digital technologies. Global trends show that the future of the road transport industry lies in sustainable, high-tech and customer-oriented organizational models.

5.1.2 Auto service companies

Road transport functions as a complex system that includes not only means of transportation, but also a developed network of infrastructure elements that provide service for vehicles, passengers, drivers and cargo. The set of such enterprises forms a segment of car service enterprises that play a key role in maintaining the smooth and efficient operation of motor transport (Figure 5.5)

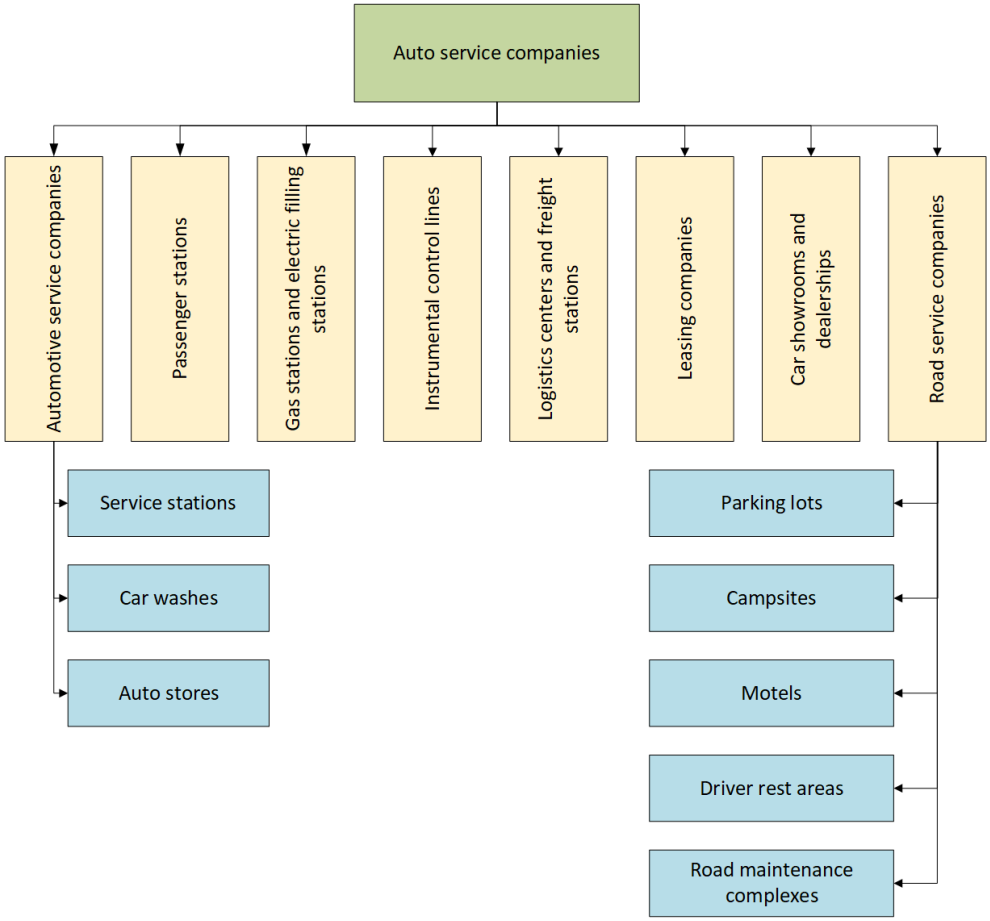

Figure 5.5 – Classification of car service enterprises

Based on their functional purpose, car service enterprises are divided into several main groups.

1. Car service enterprises. Provide maintenance, diagnostics, repair and supply of car products:
   - Service stations (STs) - perform preventive and routine work, minor and medium repairs.
   - Car washes - provide cleaning of the body, interior and vehicle components.
   - Car dealerships - specialize in the sale of spare parts, lubricants, accessories and equipment.
2. Passenger stations. Organize infrastructure services for passenger transportation:
   - Bus stations, train stations, waiting rooms, ticket offices and information services.
3. Gas stations and electric filling stations. Provide services for refueling vehicles with fuel (gasoline, diesel fuel, gas) or electricity. Often include additional services: shop, cafe, toilets.
4. Instrumental control lines. Provide inspection of the technical condition of vehicles in accordance with current standards - braking system, lighting, environmental indicators, etc.
5. Logistics centers and freight stations. Organizations that provide processing, reloading, sorting, storage and support of cargo. They play a key role in freight transportation and distribution.
6. Leasing companies. Provide financial leasing (rent) services of vehicles, with the possibility of subsequent redemption. An important segment of B2B and corporate fleet.
7. Car showrooms and dealerships. Specialize in the sale of new cars, technical consulting, purchase support, service and test drives.
8. Road service companies. Provide convenience, recreation and household services for drivers and passengers:
   - Parking lots - for temporary or long-term storage of vehicles.
   - Campsites — equipped recreation areas with the possibility of overnight stays.
   - Motels — temporary accommodation facilities near highways.
   - Driver rest areas — provide basic conditions for stopping and restoring work capacity.
   - Road service complexes — multifunctional facilities that combine several services: gas station, cafe, parking lot, hotel, car wash, etc.

These enterprises form the service infrastructure of road transport, ensuring technical reliability, ease of use, commercial efficiency and traffic safety. In modern conditions, they are increasingly actively

implementing digital technologies, process automation, environmental service standards and customer-oriented services, forming a single integrated transport ecosystem.

The presented classification allows you to systematize various road transport infrastructure facilities according to their purpose. This approach contributes to a holistic understanding of the role of service companies in ensuring the efficient, safe and comfortable operation of vehicles.

Functions of car service stations

Car service stations are specialized car service enterprises that perform work to maintain the technical condition of vehicles during their operation. Their activities are aimed at ensuring road safety, reducing operating costs, extending the life of vehicles, and increasing the level of technical readiness of the fleet (Fig. 5.6).

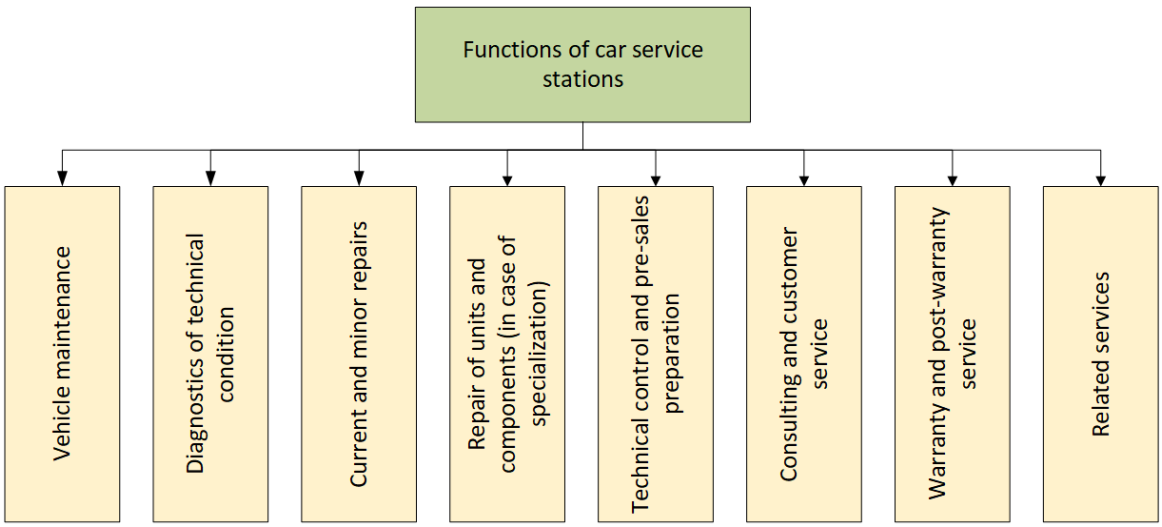

Figure 5.6 – Functions of car service stations

Main functions of service stations:

1. Vehicle maintenance:
   - carrying out routine and preventive maintenance work in accordance with the manufacturer's technical documentation;
   - replacing technical fluids, filters, spark plugs, belts, lubricants, etc.;
   - checking and adjusting components (braking system, steering, lighting, suspension).
2. Diagnostics of technical condition:
   - Using electronic and instrumental equipment to detect malfunctions;
   - Carrying out computer diagnostics of the engine, transmission, electronic systems, ABS, ESP;
   - Identifying the causes of reduced power, increased fuel consumption, noise, vibrations.
3. Current and minor repairs:
   - Eliminating malfunctions identified during diagnostics;
   - Repair or replacement of individual elements of the chassis, brakes, suspension, clutch, electrical equipment;
   - Work with electrical systems, lighting, starting and charging systems.
4. Repair of units and components (in case of specialization):
   - Internal combustion engines, gearboxes, steering mechanisms, starters, generators;
   - Work is carried out in specialized areas or service shops.
5. Technical control and pre-sales preparation:
   - Checking the compliance of vehicles with technical norms and standards (including environmental ones);
   - Conducting pre-sales preparation for car dealerships, including diagnostics, system adjustment, washing and refueling.
6. Consulting and customer service:
   - Providing technical advice on the operation and maintenance of cars;
   - Formulating recommendations for further actions in case of detection of complex malfunctions;

• Support for online recording systems, digital service histories and SMS-informing.

7. Warranty and post-warranty service:
   • Performance of work within the warranty period on cars, including in branded service centers;
   • Provision of official records in the service book, use of certified spare parts.
8. Related services:
   • Car wash, tire fitting, wheel balancing;
   • Air conditioner refueling, glass chip repair, tinting;
   • Sale of spare parts, lubricants, auto chemicals, accessories.

Service stations are an important element of the automotive service infrastructure. They ensure timely detection and elimination of malfunctions, contribute to improving traffic safety, preserving the operational properties of the car, and optimizing vehicle maintenance costs. In the context of the development of intelligent automotive systems, automation, digital diagnostics, and customer-oriented services are of particular importance.

Classification of car service stations

Service stations are classified according to a number of characteristics that reflect their specialization, scope of services, organizational form, affiliation to the manufacturer and type of serviced vehicles. This classification allows you to better navigate the structure of the service infrastructure and form an effective system of after-sales and repair service (Fig. 5.7).

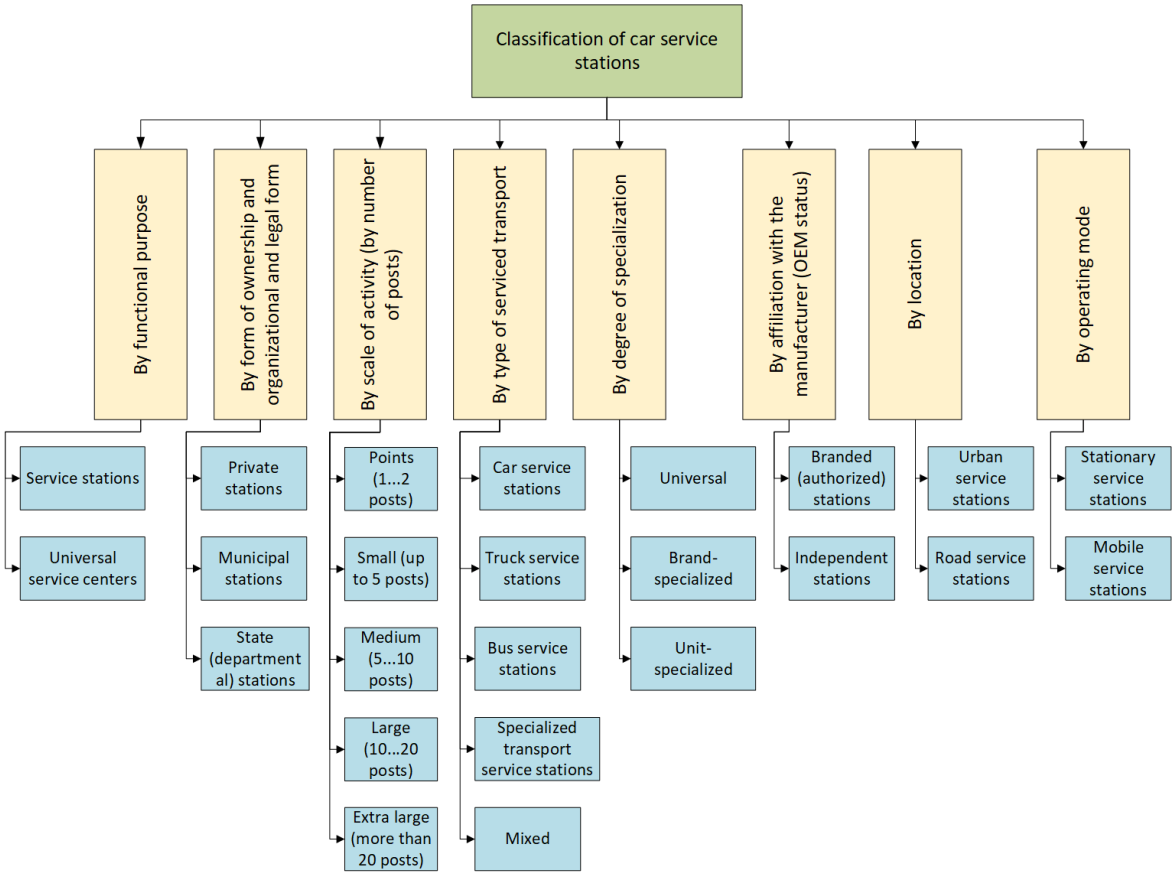

Figure 5.7 – Classification of car service stations

1. By functional purpose:
   •Service stations — specialize in preventive maintenance and simple repairs.
   •Universal service centers — combine maintenance, repair, car wash, tire fitting and sale of automotive products.
2. By form of ownership and organizational and legal form:
   •Private stations — commercial enterprises, independent or franchised.

- Municipal stations — owned by local authorities (usually for municipal transport).
- State (departmental) stations — owned by state or corporate structures (Ministry of Internal Affairs, Ukrzaliznytsia, logistics companies).

3. By scale of activity (by number of posts).
4. By type of serviced transport:
   - Car service stations
   - Truck service stations
   - Bus service stations
   - Specialized transport service stations (construction, municipal, agricultural machinery)
5. By degree of specialization:
   - Universal - service various brands and types of cars.
   - Brand-specialized - focused on a specific brand or model range.
   - Unit-specialized - repair of individual units or systems (engines, transmissions, chassis).
6. By affiliation with the manufacturer (OEM status):
   - Branded (authorized) service stations - officially cooperate with the car manufacturer, use original spare parts, adhere to company standards.
   - Independent service stations (independent aftermarket) - not tied to a specific brand, can use both original and analog components.
7. By location:
   - Urban service stations. Located within settlements, they serve private, commercial and municipal transport. Often include related services - car washes, shops, waiting areas, cafes.
   - Road service stations. Located along public roads. Focused on providing emergency technical assistance to transit transport (trucks, buses, tourist cars). Often part of road service complexes, next to gas stations, motels, parking lots. 7. By service mode
8. By operating mode:
   - Stationary service stations - operate in a fixed location with a full-fledged infrastructure.
   - Mobile service stations - travel to the client to provide services directly at the place of operation of the car (for example, roadside assistance).

The classification of service stations allows you to better understand their role in the automotive service system, determine their specialization, capabilities and level of service. In modern conditions, the range of service stations is expanding, and the demand for comprehensive, fast, and digitally supported solutions focused on customer comfort and process efficiency is growing.

Typical organizational chart of a car service station management

The organizational structure of a car service station is formed taking into account the scale of the enterprise, the volume of services provided, the level of technical equipment and specialization. The main goal of the management structure is to ensure effective interaction of all departments of the service station in order to provide high-quality customer service and maintain high technical readiness of the equipment.

The organizational structure of a service station, shown in the diagram of Figure 5.8, is a comprehensive, multi-level management model for a modern service enterprise. It provides a clear division of functions, coordination of the activities of all departments and is aimed at the effective provision of a wide range of services for maintenance and repair of cars.

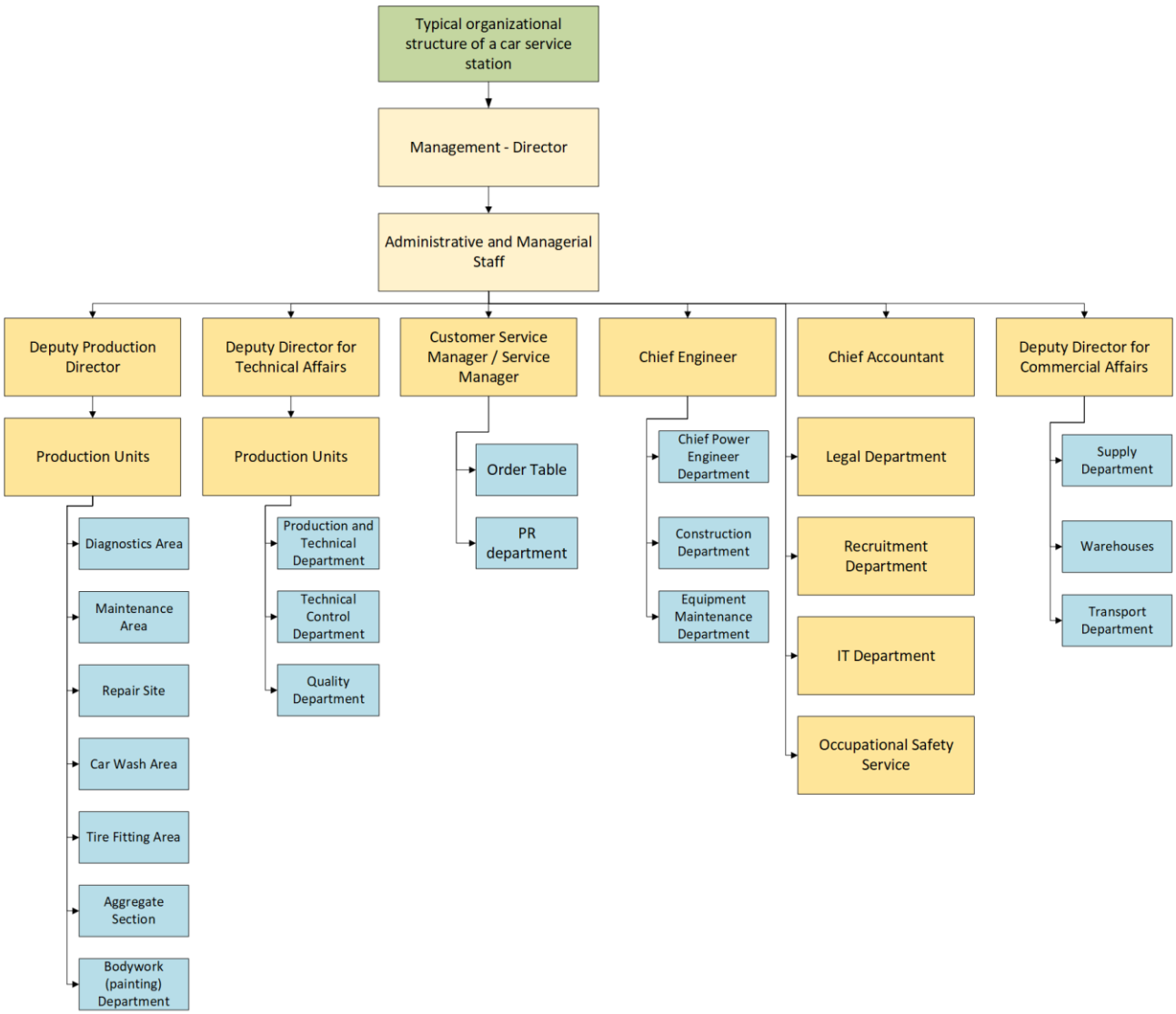

Figure 5.8 – Typical organizational chart of a car service station management

Typical organizational chart of a car service station management includes:

1. Management. The director of the service station carries out general management of the enterprise, coordinates the work of all services and is responsible for financial and economic activities.

2. Administrative and managerial personnel. The central link that ensures the organization of internal and external processes, as well as communication with customers and partners.

3. Production part

3.1. Deputy Director for Production. Manages the main production units, including:

–Diagnostics department - conducts computer and instrumental diagnostics of cars.

–Maintenance department — performs routine maintenance, oil and filter replacement, and system checks.

–Repair department — performs current and intermediate repairs.

–Washing department — provides external and internal cleaning of vehicles.

–Tire fitting department — performs assembly, disassembly, and wheel balancing.

–Aggregate department — specializes in repairing major components: engines, gearboxes, etc.

–Body (painting) department — performs bodywork and painting.

3.2. Deputy Director for Technical Issues. Controls technological aspects of service:

–Production and Technical Department — is responsible for developing technological processes and technical documentation.

–Technical Control Department — controls the quality of work performed.

–Quality Department — implements measures to implement quality standards, analyzes complaints.

4. Customer Service. Customer Service Manager / Service Manager - the main contact person for customers, coordinates orders, ensures customer information.

–Order Desk - accepts and processes service requests.

–PR Department - is responsible for marketing, promotion of service stations, public relations.

5. Technical Support and Engineering. The Chief Engineer organizes the technical policy of the enterprise:

–The Chief Power Engineering Department - ensures energy supply.

–The Construction Department - supports the development of infrastructure.

–The Equipment Maintenance Department - is responsible for the serviceability of technical equipment.

6. Financial and Economic Unit. The Chief Accountant manages financial accounting, mutual settlements, reporting.

7. Administrative, Legal and HR Support.

–Legal Department - provides legal protection and legal support for activities.

–The Recruitment Department - carries out the hiring, evaluation and adaptation of employees.

–IT department — supports information systems, electronic document management, order accounting system.

–Occupational health and safety service — monitors compliance with safety regulations and organizes personnel training.

8. Commercial activities

–The Deputy Director for Commercial Affairs coordinates supply and logistics:

–Supply department — forms orders for spare parts, materials, tools.

–Warehouses — organize storage, accounting and issuance of goods and services.

–Transport department — manages the company's rolling stock (own or service).

The presented organizational structure of the service station is an example of a modern approach to managing a service enterprise with a developed infrastructure and a wide range of services. Such a model provides flexible management, a clear division of responsibility, a high level of service quality and the ability to quickly adapt to changes in the market.

Current status and development trends of service stations

At the present stage, service stations are actively transforming in response to technological, market and environmental challenges:

Digitalization: widespread use of electronic order management systems, online records, CRM systems, mobile applications.

Electric vehicles: the emergence of specialized service stations for servicing electric vehicles, including charging infrastructure and diagnostics of high-voltage systems.

Process automation: the use of modern equipment, robotic car washes, diagnostic stands, intelligent accounting systems.

Customer orientation: focus on convenience, transparency and speed of service (including on-site service, car delivery, warranty support).

Environmental friendliness: compliance with requirements for safe waste management, the use of environmentally friendly materials, energy-saving technologies.

Service stations are an integral part of the transport infrastructure that ensures safe, reliable and efficient operation of cars. Their development is aimed at implementing innovations, digital technologies, high quality standards, and focusing on customer needs in the dynamic road transport market.

Car washes

Car washes are specialized automotive service enterprises, the main purpose of which is to ensure the cleanliness of the vehicle by removing dirt from the external and internal surfaces of the body, units and

interior. Their operation is aimed not only at the aesthetic maintenance of the car, but also at preserving the operational properties, preventing corrosion and premature wear of the paintwork.

Functions of car washes:

–Cleaning the body and wheels from dirt, dust, salts, lubricants.

–Washing the engine compartment and units (if necessary and subject to compliance with safety rules).

–Interior cleaning of the cabin: vacuuming, cleaning panels, upholstery, windows, mats.

–Deep dry cleaning of the cabin and ozonation for disinfection and odor removal.

–Pressure washing of the chassis (especially relevant in winter).

–Polishing, waxing or ceramic coating to protect the paintwork.

–Commercial vehicle maintenance - buses, vans, trucks.

Classification of car washes

Car washes are classified according to several key features (Figure 5.9):

1. By degree of automation

–Manual (traditional) - all operations are performed by personnel manually.

–Semi-automatic - a combination of manual labor and mechanized processes (for example, applying foam manually, and rinsing - in a high-pressure cleaner).

–Automatic (gantry) - the car drives into the washing arch, where the cleaning process is completely performed by the machine.

–Tunnel (conveyor) - the car moves along a belt through a series of automated modules (washing, drying, polishing, etc.).

–Self-service - the client independently washes at a specially equipped station.

2. By location

–Stationary - full-fledged car wash complexes in urban areas or at service stations, gas stations, shopping centers.

–Mobile - on-site customer service using specialized washing machines (for example, for a corporate fleet).

–Roadside car washes are located along highways and serve transit vehicles.

3. By type of vehicle served

–Cars

–Trucks

–Passenger commercial vehicles (buses, minibuses)

–Specialized vehicles (ambulances, construction equipment, agricultural machinery)

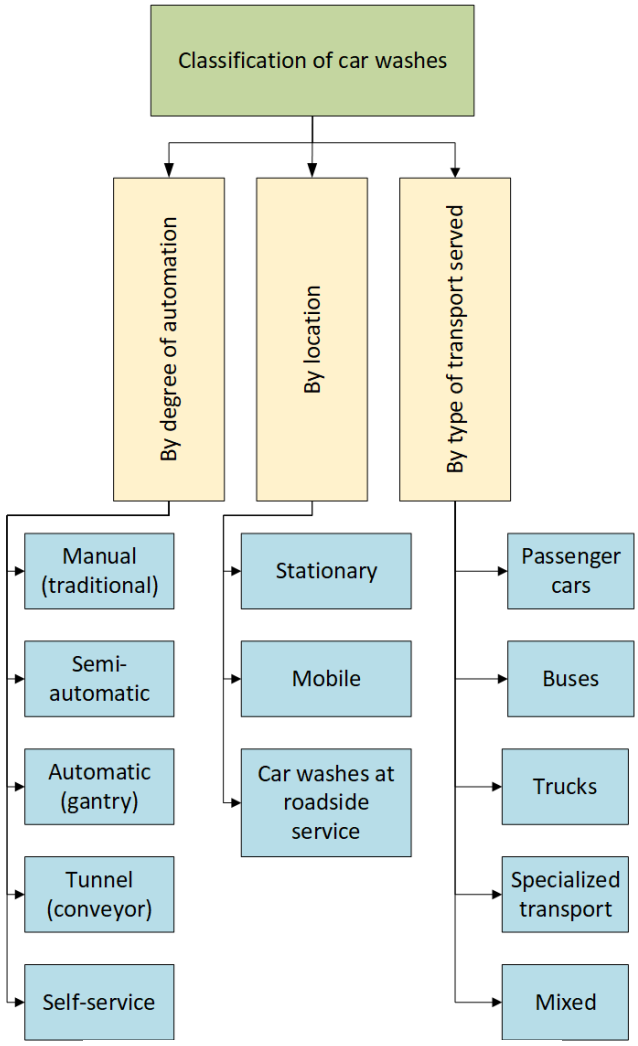

Figure 5.7 – Classification of car washes

Range of services provided by car washes

Modern car washes, especially in competitive conditions, significantly expand the list of services. A typical range may include a number of services, an approximate list of which is given in Table 5.1:

Table 5.1 - List of car wash services

Service Group	Examples
Exterior Wash	High-pressure cleaning, active foam, disc washing, drying, waxing
Interior Cleaning	Vacuum cleaning, surface wiping, window washing, stain removal
Interior Dry Cleaning	Deep cleaning of fabrics, upholstery, ceilings, leather elements
Polishing and Protection of LFP	Abrasive/non-abrasive polishing, protective nanocoatings, ceramics
Undercarriage Treatment	Underbody cleaning, anti-corrosion protection
Additional Services	Ozonation, aromatization, engine washing, rubber blackening, auto chemicals sales
Package Services	Subscriptions, comprehensive service with discounts, corporate service

Modern trends in car wash development

Automation and digitalization: the use of terminals, contactless payment, mobile applications for recording.

Environmental friendliness: the use of phosphate-free detergents, water purification and reuse systems.

Self-service: the growth of the popularity of car washes, where the client performs all the actions himself at an affordable price.

Integration with other services: car washes at service stations, gas stations, shopping malls, car dealerships.

Business formats: the development of franchises, network brands, automatic car wash complexes with high throughput.

Car washes are an important component of the car service system, which performs not only an aesthetic, but also a technical and hygienic function. Modern car wash enterprises are dynamically developing, introducing new technologies, expanding the list of services and adapting to environmental requirements and consumer expectations. Quality, speed, accessibility, and customer focus are key factors for success in the car wash service market.

Car shops

Car dealerships are specialized retail businesses that sell goods needed for the operation, maintenance, repair and modernization of cars. They play an important role in the logistics of spare parts and consumables, serving as a key link between manufacturers of auto components, service companies and end users.

Main functions of car dealerships:

Sale of auto parts - original, licensed or universal for various makes and models of cars.

–Sale of consumables - lubricants, filters, technical fluids, belts, brake pads, etc.

–Provision of automotive chemicals and cosmetics - car shampoos, polishes, sealants, windshield washers, disinfectants.

–Offer of accessories and components - covers, mats, video recorders, multimedia, alarms.

–Consulting services - assistance in selecting parts, clarification of compatibility and conditions of use.

–Acceptance of orders and delivery - individual ordering of rare or scarce components.

–Sale of tires, batteries, tools - for repair or maintenance.

Classification of car shops

1. By form of ownership and organization

–Private retail stores - operate independently or within a franchise.

–Chain car shops - have several outlets, are part of a large distributor.

–Online stores - sell car products online with delivery.

2. By assortment

–Universal - a wide selection of spare parts and goods for cars of different brands.

–Specialized - work with certain categories of goods (for example, only lubricants or only electronics).

–Branded - sell only parts for a certain brand (for example, "Toyota Parts", "Renault Store").

3. By functional combination

–Individual car shops - independent trading enterprises.

–Car shops at service stations or gas stations - are integrated into the service structure.

–Wholesale and retail bases - combine wholesale and retail trade for service stations and consumers.

Modern trends

Modern trends in the development of car dealerships:

–Integration with e-commerce - transition to the online segment, marketplaces, automated order platforms.

–Customer orientation - individual consultations, bonus programs, personalized offers.

–Accounting automation - use of CRM, ERP, electronic document management.

–Fast logistics - supply optimization, cooperation with courier services, contactless delivery.

–Expansion of the range for electric vehicles - chargers, adapters, electronics.

–Formation of highly specialized niches - for example, only Japanese cars, only tuning, only commercial vehicles.

Car dealerships are an integral element of the automotive service infrastructure. They ensure the availability of necessary components and materials for all participants in the transport process - from private car owners to motor transport companies. Modern auto shops are actively adapting to market changes, implementing digital tools, expanding their range, and improving the quality of customer service.

5.1.3 Passenger bus stations

Passenger bus stations are specialized enterprises designed to organize the process of transporting passengers by bus. They act as key infrastructure facilities in the field of intercity, suburban and urban road transportation, ensuring the convenience, safety and regularity of passenger traffic.

Bus stations function as places for stopping, disembarking, boarding passengers, selling tickets, servicing vehicles, organizing luggage handling and related services.

Main functions of bus stations

–Organization of passenger transportation – formation of a schedule, dispatching, control over the departure of buses.

–Sale of tickets and reservation of seats – through ticket offices, self-service terminals or online platforms.

–Boarding and disembarking of passengers – creation of comfortable conditions for waiting and movement of passengers.

–Registration of transportation of luggage and hand luggage, temporary storage of things.

–Information support – announcement of the schedule, changes of flights, departure platforms.

–Provision of additional services – rest rooms, meals, medical care, restrooms, Wi-Fi, trade.

–Security control – territory security, video surveillance, document verification, monitoring of compliance with transportation rules.

–Bus fleet maintenance – technical inspection, short-term storage, refueling, washing (in large complexes).

A typical range of services that can be provided at bus stations is given in Table 5.2.

Table 5.2 – A typical range of services that can be provided at bus stations

Service Group	Examples
Transportation Services	Ticket sales, route checking, dispatch support, traffic schedules
Information Services	Electronic scoreboard, online monitoring, announcements, help desk
Passenger Services	Waiting rooms, lockers, public restrooms, first aid station
Trade and Catering	Cafes, shops, kiosks, coffee and food vending machines
Digital Services	Mobile applications, electronic tickets, self-service terminals
Services for Carriers	Bus parking, refueling, technical inspection, flight registration
Related Services	Hotel reservations, tourist information, passenger insurance
Security	Security, entrance control, video surveillance systems, fire protection

By the volume of service, bus stations are divided into:

–large - more than 100 flights per day, up to 10 thousand passengers.

–medium - 30–100 flights, 2–10 thousand passengers.

–small - up to 30 flights, no more than 2 thousand passengers per day.

Modern trends in the development of passenger bus stations

Process automation – electronic scoreboards, online tickets, contactless payment, self-service kiosks.

Integration with other modes of transport – multimodal hubs (auto + rail + aviation).

Comfort and accessibility – taking into account the needs of low-mobility groups, climate control, environmental aesthetics.

Intelligent control systems – dispatch centers, automatic schedule updates, passenger flow analytics.

Environmental friendliness – implementation of charging stations for electric buses, energy-efficient lighting, waste disposal.

Safety and control - enhanced video surveillance measures, access control systems, security posts.

Passenger bus stations are critically important transport infrastructure enterprises that ensure the stable functioning of the passenger transportation system. Their efficiency affects the convenience, safety and mobility of the population. In modern conditions of transport development, bus stations are turning into multimodal transport and service hubs that integrate infrastructure, logistics, and information functions.

5.1.4 Gas stations and electric filling stations

Gas stations (GAS) and electric charging stations (ECS) are specialized enterprises designed to provide vehicles with fuel and energy resources. They are important elements of the transport infrastructure, ensuring the continuous operation of vehicles with internal combustion engines (ICE), hybrid systems and electric drives.

In modern conditions, these facilities also perform the functions of mini-complexes of road service with an expanded range of goods and services.

The classification and main functions of filling stations are shown in Figure 5.8.

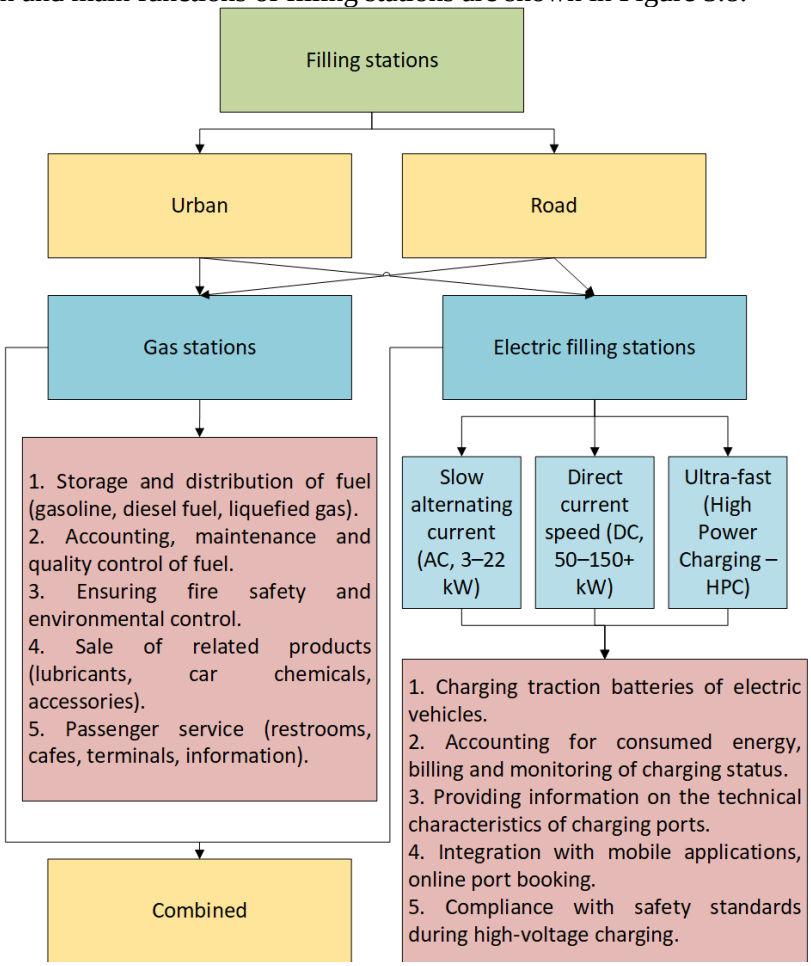

Figure 5.8 – The classification and main functions of filling stations

The range of services that can be provided by Gas and Electric Stations is given in Table 5.3.

Table 5.3 – The range of services that can be provided by Gas and Electric Stations

Service Category	Gas station	EV charging station
Core Services	Fuel, gas, lubricants filling	Electric vehicle charging
Technical Services	Tire inflation, oil level check, minor repairs	Tire inflation, battery testing, charging information
Ancillary Services	Shop, cafe, terminal, coffee machine, rest area, charging gadgets	
Information Services	Electronic price display, information on road conditions, mobile application, online monitoring	
Payment and Accounting	Cashier, terminal, fuel card, QR code, contactless payment, NFC, subscription	
Specialized Services	Car wash, oil change, auto chemicals sales, navigation integration	Car wash, auto chemicals sales, navigation integration, charging subscription
Environmental Solutions	Vapor recovery systems, emission control	Green power (solar/wind generation, Smart Grid)

Current development trends

–Integration of gas stations and EV charging stations — creation of hybrid fueling complexes.
–Expansion of digital services — mobile applications, dynamic pricing, loyalty cards.
–Contactless payment and remote control — minimization of contact with personnel.
–Energy saving and environmental friendliness — introduction of LED lighting, water reuse at car washes.
–Intelligent load management systems — balancing electricity consumption.
–Modularity — emergence of container and mobile charging stations.

Gas stations and electric charging stations are key enterprises of fuel and energy support for road transport. They not only ensure the supply of resources, but also perform an important service, logistical and infrastructure role. In the process of developing future transport, there is a gradual transition from traditional gas stations to hybrid and fully electric complexes capable of meeting the needs of mobility in the era of energy efficiency and sustainable development.

5.1.5 Instrumental control lines

Instrumental control lines are specialized enterprises or structural units of technical infrastructure designed to check the technical condition of vehicles using certified measuring equipment. Their main purpose is to assess the vehicle's compliance with regulatory requirements for traffic safety and ecology, primarily within the framework of mandatory technical control.

In modern conditions, instrumental control lines are an important tool for state supervision of the technical condition of the vehicle fleet, as well as a guarantor of improving road safety.

Main functions of instrumental control lines:

–Instrumental diagnostics of the technical condition of the vehicle.
–Assessment of the vehicle's compliance with technical regulations.
–Issuance of inspection results protocols or diagnostic cards.
–Control of the level of emissions of harmful substances into the atmosphere.
–Generation of electronic reporting for state registers (Ministry of Internal Affairs, Central Administrative Service, etc.).
–Assistance in passing a technical inspection for insurance or vehicle registration.
–Conducting inspections at the request of enterprises (including fleets).

Modern technologies on instrumental control lines:

–Automatic number plate recognition (ANPR).
–Electronic queue and online inspection booking.
–Transfer of results to the Ministry of Internal Affairs register in real time.
–Video recording of the entire inspection process.
–Implementation of mobile applications for customers.

The role of instrumental control lines in the road transport system

–Increasing traffic safety - by identifying malfunctions before the vehicle enters the route.
–Reducing environmental damage - by controlling the level of emissions.
–Legal legitimacy of transportation - since the presence of a mandatory technical control protocol is a prerequisite for participation in commercial transportation.
–Analytics of the technical condition of the vehicle fleet - is used by the state to plan transport policy.

Instrumental control lines are an integral element of the technical regulation system in road transport. They provide diagnostics, verification and documentation of the technical condition of vehicles. In the context of improving road safety, environmental responsibility, and digital transformation of transport, the role of LICs is constantly growing. Expanding their functions and implementing modern technologies allows integrating LICs into the country's unified transport information system.

5.1.6 Logistics centers and freight stations

Logistics centers and freight stations are specialized road transport enterprises that provide organization, processing, storage, consolidation, transshipment and distribution of cargo during the delivery process. They perform the function of transport and warehousing and management nodes, where transportation, warehousing, information and service operations are combined.

These enterprises are key objects of transport logistics, especially in the context of the integration of road transport into multimodal transport systems (rail, air, seaports, terminals, etc.).

Main functions

- Logistics centers (LCs):
  - –Consolidation of cargo - combining small batches into larger ones for efficient transportation.
  - –Cross-docking - instant transshipment from one vehicle to another without storage.
  - –Storage and warehousing of cargo, including with temperature control.
  - –Supply chain management, inventory accounting, routing.
  - –Processing of customs documentation and certification of cargo.
  - –Provision of information and IT services for monitoring and planning of logistics processes.
- Cargo stations (CS):
  - –Receipt and dispatch of cargo, mainly of a regional or local scale.
  - –Weighing, sorting and picking of cargo.
  - –Preparation of transport documents (waybills, applications, acts).
  - –Temporary storage of cargo in covered and open areas.
  - –Redirection of cargo, control over compliance with the delivery schedule.

Classification of enterprises (See Figure 5.9):

1) By functional purpose:
   - –Universal LCs - handle cargo of various types and directions.
   - –Specialized LCs - for servicing individual industries (agricultural, pharmaceutical, e-commerce).
   - –Regional cargo stations - provide logistics within the region/district.
   - –Port- or border logistics hubs - act as a transit hub.
2) By territorial coverage:
   - –National logistics hubs (with integration into international transport corridors).
   - –Local distribution centers (Last Mile Delivery).
   - –Domestic delivery terminals (Fulfillment centers).
3) By type of transport served:
   - –Automobile
   - –Rail-automobile (intermodal)
   - –Automobile-aviation
   - –Automobile-sea (port-based)

The range of services that can be provided by logistics centers and freight stations is given in Table 5.4.

Table 5.4. – The range of services that can be provided by logistics centers and freight stations

Category	Examples of services
Freight Forwarding	Transportation organization, routing, cargo insurance
Warehousing Services	Responsible storage, sorting, palletizing, labeling, assembly
Customs Brokerage	Customs clearance, declaration, document support
Information Services	Cargo tracking, logistics IT systems, supply analytics
Vehicle Maintenance	Parking, refueling, washing, technical inspection
Cross-docking and Transshipment	Transshipment from one type of transport to another without long-term storage
Return Logistics	Returns acceptance, packaging, processing, disposal
Fulfillment	Assembling of online orders, packaging, delivery to the end consumer

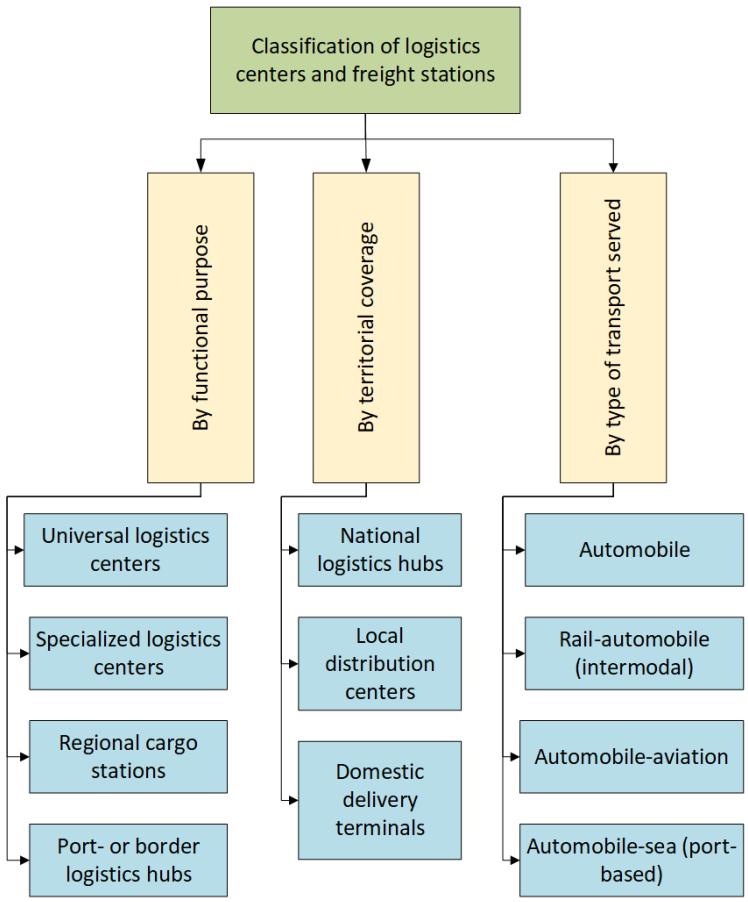

Figure 5.9 – Classification of logistics centers and freight stations

Modern trends in the development of logistics centers and freight stations:

–Automation of logistics processes - use of WMS (Warehouse Management System), RFID, robotic warehouses.

–Integration into digital platforms - logistics marketplaces, e-Logistics.

–Development of "green logistics" - environmental standards, use of electric transport, energy-efficient warehouses.

–Multimodality - ensuring flexible delivery schemes using different types of transport.

–Just-in-Time services - ensuring delivery exactly on time, without surpluses in warehouses.

–The emergence of micro-logistics hubs - small-scale nodes within cities for fast delivery.

Logistics centers and freight stations are critically important elements of the road transport infrastructure. They ensure the efficient movement of material flows, help reduce logistics costs, increase the speed, reliability and transparency of cargo delivery. In modern conditions, these enterprises are transforming into high-tech logistics platforms that integrate digital solutions, environmental practices, and customer-oriented service.

5.1.7 Leasing companies

Leasing companies are specialized enterprises that provide vehicles for long-term use (leasing) to legal entities and individuals with or without the right to purchase. In the field of road transport, leasing companies play an important role in updating and modernizing the fleet, especially for small and medium-sized businesses, transport companies, carriers and service services.

Such companies provide access to modern rolling stock without the need for a one-time investment, which increases the financial flexibility of enterprises.

Main functions:

–Purchasing vehicles with their own or borrowed funds for the purpose of leasing.

–Concluding leasing agreements with legal entities and individuals.

–Financing the renewal of clients' fleets on favorable terms.

–Monitoring and supporting the implementation of leasing agreements.
–Assessing the client's solvency, risk management.
–Transferring ownership of vehicles after the contract is completed (optional).
–Providing insurance, registration, and vehicle maintenance (by arrangement).

The range of services that can be provided by leasing companies is given in Table 5.5.

Table 5.5 – The range of services that can be provided by leasing companies

Service Group	Contents
Basic Leasing Services	Provision of a car for use, contract execution, payment control
Financial Services	Development of payment schedules, flexible forms of prepayment, restructuring
Insurance	Full Coverage Auto Insurance, Compulsory Third Party Liability Insurance, insurance against financial risks
Services	Maintenance, repair, tire replacement (with Full Service Leasing)
Ancillary Services	GPS-monitoring, fleet administration, consulting, support
Document Support	Vehicle registration, license registration, customs clearance (for imported cars)
Online Services	Electronic signing of contracts, client account, leasing calculators

Advantages of using leasing in road transport:
–The possibility of quickly updating the fleet without significant capital investments.
–Optimization of tax obligations (expenses are included in expenses).
–Flexible financing conditions - adapting the schedule to the client's income.
–Access to modern transport technologies, reducing repair costs.
–Reducing the risks of asset depreciation, since the vehicle may not be transferred to ownership.

Current development trends
–Digitalization of leasing - online calculators, electronic contracts, remote identification.
–Electric leasing - popularization of electric vehicle leasing with state compensations.
–Micro leasing - targeting individual entrepreneurs and small businesses.
–Modular leasing - adding services on demand (maintenance, insurance, roadside assistance).
–Integration with car sharing is a combination of leasing with short-term rental or sublease.

Leasing companies are an important financial and logistical tool in the field of road transport. They contribute to increasing the availability of modern transport, reducing maintenance costs and optimizing financial flows of enterprises. In the current conditions of the development of the mobility market, leasing is turning into a comprehensive service that combines finance, maintenance, information support and fleet management.

5.1.8 Car showrooms and dealerships

Car showrooms and dealerships are key links between the car manufacturer (or importer) and the end consumer. They provide access to new vehicles, support the process of choosing, purchasing and registering a car, provide after-sales and service services, and also support the brand presence in local markets.

A car showroom is a trade and exhibition area where cars are displayed, consulting support, sales and basic related services are provided.

A dealership (official dealer) is a complex business facility that (in addition to sales) performs service, warranty work, sells spare parts, administers financial and insurance programs, and works according to the standards of the car manufacturer.

Often these concepts are combined: a modern car dealership includes a showroom, a service area (service station), a spare parts warehouse, an administrative unit and client infrastructure.

Main functions performed by enterprises:

1. Commercial and sales: sale of new (and certified used) cars, acceptance of orders, execution of contracts.
2. Consulting: selection of model, equipment, additional equipment; explanations on operation.
3. Demonstration: exhibition of models, test drives, presentations of new products.
4. After-sales service: warranty and post-warranty maintenance, repair, installation of accessories.
5. Spare parts and materials: sale of original and licensed components, consumables.

6. Financial and insurance intermediary: lending, leasing, insurance (MTPL, Comprehensive).
7. Administrative and registration: assistance in vehicle registration, license plates, certification, customs procedures (for import).
8. Marketing and branding: brand image building, local advertising campaigns, loyalty programs.
9. Customer data management: CRM, service history, maintenance reminders.
10. Fleet solutions: corporate fleet programs, service contracts, remote administration.

A typical range of services that can be provided by car showrooms and dealerships is given in Table 5.6.

Table 5.6 – A typical range of services that can be provided by car showrooms and dealerships

Service Group	Contents / examples
Car Sales	New cars from stock or on order; online configuration; special series.
Certified Pre-Owned (CPO)	Diagnostics, preparation, limited warranty, transparent history.
Test Drives	Individual, group, demonstration programs of new models.
Trade-in / Buyback	Evaluation of the client's used car with inclusion in the cost of a new one.
Financing	Credit programs, installments, operational and financial leasing.
Insurance Services	MTPL, Comprehensive, additional insurance packages.
Registration Support	Initial registration, license plates, re-registration, customs clearance of imported cars.
Warranty Service	Scheduled maintenance according to manufacturer's regulations, replacement of components, free campaigns.
Post-Warranty Service	Repair, diagnostics, software update of systems, service packages.
Body & Paint Work	Recovery after an accident, local repair of LFP, insurance repairs.
Parts & Accessories	Original and licensed parts, tuning kits, tires, wheels.
Digital & Telematics Services	Connection to mobile applications, OTA updates (where supported), car status monitoring.
Seasonal Programs	Tire rotation, maintenance campaigns, winter/summer preparation, air conditioning check.
Replacement Car / Mobile Service	Provision of a temporary car for the duration of repairs; on-site crews.
Customer Education	Courses on the operation of electric vehicles, driver assistance systems (ADAS), and economical driving.

The structure of a typical car dealership, taking into account the functions performed by the enterprise, is shown in Figure 5.10.

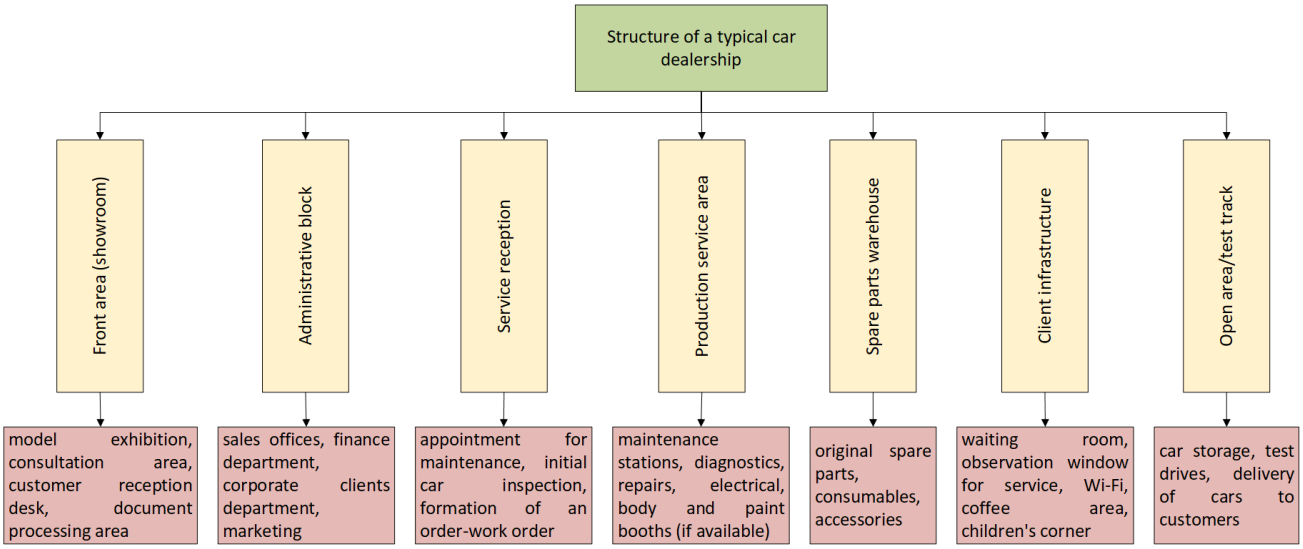

Figure 5.10 – The structure of a typical car dealership

Current trends in the development of car showrooms and dealerships:

–Omnichannel sales: a combination of online configurator, remote booking and physical delivery.
–Agency sales model: unified prices from the manufacturer, dealer as a service agent.
–Transition to mobility as a service (MaaS): car subscription, short-term rental, car sharing through a dealer.
–Electrification of model lines: integration of charging stations, training of personnel on BB batteries, special warranties.
–Digital diagnostics and OTA: service reminders via telematics, remote software updates.
–Personalized loyalty programs: points systems, all-inclusive service packages, prepaid maintenance.
–Environmental standards of facilities: energy-efficient buildings, reuse of materials, "green" branding.
–Data and analytics: CRM, customer needs forecasting, pre-ordering of spare parts based on car telematics data.
–Modular and compact formats: showrooms in shopping centers, pop-up brand studios, mobile presentation complexes for regions.

Car dealerships and dealerships are multifunctional enterprises in the motor transport system. They combine trade, service, financial, information and customer-oriented functions, ensuring the full life cycle of a vehicle - from selection and purchase to operation, technical support and replacement. Modern market trends are directing the dealership business towards digitalization, service, environmental friendliness and integration with new mobility models.

5.1.9 Road service companies

Road service enterprises are a set of stationary or mobile infrastructure facilities located along public roads, designed to ensure safe, comfortable and efficient service for road users. They provide a wide range of technical, social, informational and commercial services for drivers, passengers and vehicles.

Such enterprises contribute to increasing the level of road safety, reducing driver fatigue, ensuring the stable functioning of the transport system, and developing auto tourism.

Parking lot

A parking lot is a specially equipped area or structure intended for temporary or long-term storage of vehicles. The main purpose of parking lots is to ensure safe, organized, controlled parking of cars and trucks, buses, special equipment, etc.

They are components of road infrastructure enterprises aimed at supporting mobility, reducing congestion in cities, preventing chaotic parking, and ensuring the protection of vehicles from theft or damage.

Main functions:

–Providing a place for storing vehicles (short- or long-term).
–Ensuring the physical security of vehicles (fencing, video surveillance, security).
–Regulation of parking space (marking, occupancy control).
–Accounting and control of parking time.
–Supporting service for drivers and passengers (information support, navigation, waiting).
–Ensuring conditions for servicing commercial vehicles (trucks, buses).

The range of services that can be provided by car parks is given in Table 5.7.

Table 5.7 – The range of services that can be provided by car parks

Service Category	Contents
Basic Services	Parking space provision, hourly/daily/monthly space rental
Security Services	Video surveillance, security, automatic barriers, space indicators
Payment and Accounting	Cashless payment, mobile applications, parking meters, subscriptions
Service Services	Electric vehicle charging, compressor, vacuum cleaner, car wash
Driver Comfort	Navigation system, waiting benches, sanitary facilities
Freight Transport Services	Weighing complexes, rest areas for drivers, showers, canteen
Information Services	Occupancy/vacancy board, online booking

Modern trends in the development of parking lots:

–Digitalization: implementation of automatic license plate recognition systems, mobile applications for searching and booking a space.

–Eco-orientation: implementation of electric vehicle charging stations, solar panels for autonomous power supply.

–Automated systems: lifting or mechanized multi-level parking lots in limited space conditions.

–Integration with transport hubs: parking lots near the metro, train stations, with the possibility of transferring to public transport ("Park & Ride").

–Video analytics and Smart Parking: smart occupancy sensors, dynamic pricing.

Parking lots as road service facilities provide the necessary infrastructure for organized storage of vehicles, contribute to increasing the efficiency of urban traffic, reducing congestion and the level of accidents. Their functioning is critically important both in cities and on intercity routes, especially in conditions of rapid growth in the number of vehicles and the development of intelligent transport systems.

Campsites

A campsite is a specially equipped enterprise (territory) for temporary rest of travelers who travel by motor vehicle and live in tents, trailers, motor homes (campers) or cars. The main purpose of campsites is to provide comfortable and safe rest, overnight stay and service for motorists.

Campsites are an important component of road and tourist infrastructure, contribute to the development of motor tourism, create conveniences for traveling to remote, natural or historical areas.

Main functions of campsites:

Providing parking spaces for cars and campers.

Organizing places for overnight stays in tents, trailers, houses or in the open air.

Providing household amenities (shower, toilet, water, electricity).

Promoting tourism, recreation and active recreation.

Information support for tourists (routes, attractions, safety rules).

Ensuring the safety of vacationers and the preservation of property.

The range of services that can be provided by campsites is given in Table 5.8.

Table 5.8 – The range of services that can be provided by campsites

Category	Services
Basic	Vehicle parking, tent or trailer space, overnight accommodation
Conveniences	Shower, toilet, laundry, kitchen, electricity, Wi-Fi
Recreation	Picnic areas, playgrounds, bicycle/catamaran rental, hiking organization
Information	Maps, guidebooks, tourist routes, reservation of places
Technical services	Battery charging, trailer repair, hydrogen sulfide water drainage
Security and safety	Video surveillance, territory security, access control
Food	Café, vending machines, shops, catering
Medical services	First aid kit, access to ambulance, minimal medical services (if necessary)

Classification of campsites (See Figure 5.9):

a) By level of comfort (classification of "stardom")

–1★ – minimum set of services (access to toilet and drinking water, lighting).

–2★–3★ – basic comfort (shower, kitchen, electricity, security).

–4★–5★ – campsites with extended service (Wi-Fi, swimming pools, animation, equipment rental).

b) By location:

–Roadside – near highways, provide short-term rest.

–Recreational – in natural areas (forests, mountains, coast).

–Tourist campsites – near landmarks, national parks, resorts.

c) By target audience:

–Family campsites (with playgrounds, recreation areas).

–For RV parks – with infrastructure for connecting trailers.

–For hikers/cyclists.

d) By length of stay:

–Short-term (1–3 nights).

–Long-term (with the possibility of staying for weeks/months).

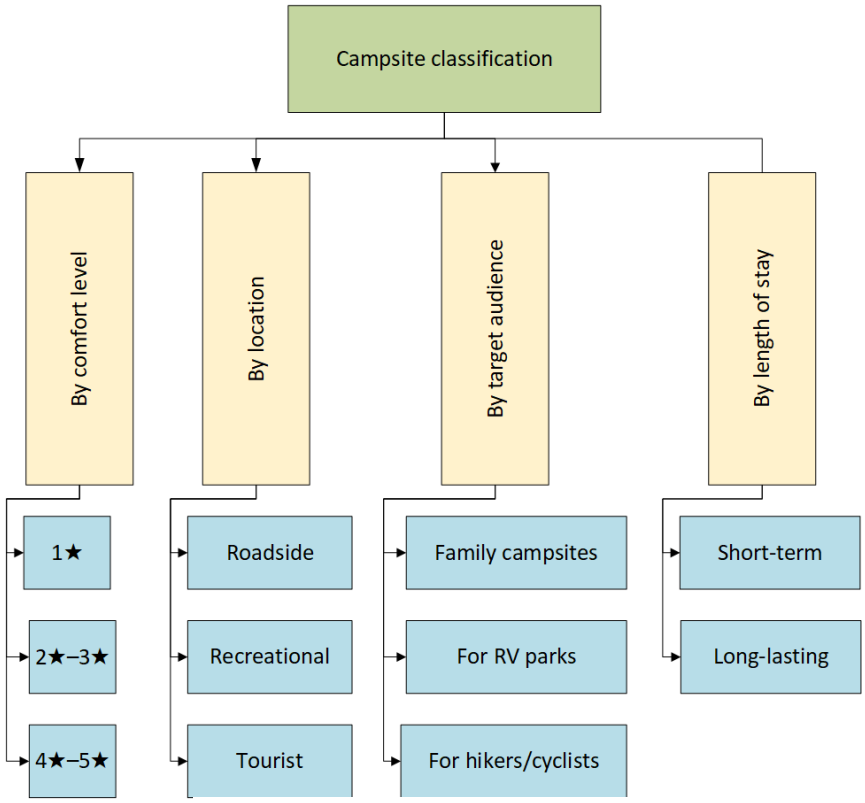

Figure 5.11 – Classification of campsites

Modern trends in the development of campsites:

–Eco-campsites - use of renewable energy sources, waste sorting, minimal impact on nature.

–Glamping - a format of "luxury camping" with a high level of comfort (sleeping beds, bathtubs, air conditioning).

–Digital services - mobile applications for booking, interactive maps, contactless registration.

–Themed campsites - ethnocampsites, ecofarms, campsites for festivals, yoga, fishing, etc.

–Network campsites - franchises or combined networks of campsites within the country or Europe (for example, CampingCard ACSI).

Campsites as separate enterprises play an important role in the development of road services and tourism. They combine the mobility of motorists with the need for recreation, household amenities and safety, contribute to the unloading of hotel infrastructure and support sustainable tourism.

Motels

A motel (from motor + hotel) is a specialized hotel-type enterprise located along highways, designed to provide short-term accommodation and related services to drivers and passengers traveling by their own transport.

The main purpose of motels is to provide a comfortable night's rest, recovery and service for motorists, as well as create conditions for safe storage of the vehicle.

The main functions of motels:

–Providing temporary housing for motorists (usually for 1–2 days).

–Creating convenient conditions for parking near the rooms or in a guarded area.

–Providing basic everyday comfort on the road.

–Providing information and reference services (routes, maps, weather, etc.).

–Providing additional services for motorists (laundry, food, communication).

–Maintaining the safety of tourists and protecting their property.

Motels are classified by level of comfort, similar to campsites (Fig. 5.11).

The range of services that can be provided by motels is given in Table 5.9.

Table 5.9 – The range of services that can be provided by motels

Service Category	Typical motel services
Accommodation	Room rental for a day or a few hours, online or by phone booking
Parking	Parking space near the room or guarded parking
Conveniences	Bathroom, shower, TV, Wi-Fi, air conditioning, heating, safe
Food	Breakfast, cafe, buffet, vending machines, sometimes a restaurant
Technical Services	Charging electric cars, pump, minimal repairs, call for technical assistance
Information Services	Route maps, tourist information, weather forecast, support service
Entertainment and Recreation	Television services, sometimes - exercise machines, billiards, mini-park
Driver Services	Early check-in/check-out, navigator rental, drinks, snacks on the road
Security	24-hour security, video surveillance, alarm system, safes in rooms

Features and advantages of motels:

–Simplicity and speed of service.

–Affordable price compared to hotels.

–Convenience for motorists - entrance to the room directly from the parking lot.

–Minimum requirements for check-in time (often 24-hour service).

–Flexible accommodation format (from 2-3 hours to several days).

Modern trends in motel development:

–Automated motels - check-in via terminals or applications, contactless check-in.

–Loft motels and themed establishments - designer interiors, "retro", "eco", "loft" style.

–Motels within chain brands - Motel 6, Ibis Budget, Formule 1, which guarantee standards.

–Integration with gas stations, service stations or food courts - creation of "multifunctional hubs".

–Improving environmental standards - energy efficiency, use of solar energy, etc.

Motels are an important part of the road service infrastructure, especially in conditions of heavy traffic and the development of domestic tourism. They combine accessibility, mobility and functionality, providing comfortable conditions for travelers on routes of various lengths.

Driver rest areas

Driver rest areas are specially equipped areas along highways, designed for short-term stopping of vehicles in order to provide rest for drivers and passengers. They are an important element of improving road safety, preventing driver fatigue and overfatigue, and reducing the number of accidents due to the human factor.

Main functions of the areas:

–Providing a safe place for short-term stopping of vehicles.

–Ensuring conditions for physiological rest of drivers.

–Increasing the level of road safety by reducing fatigue and drowsiness.

–Ensuring minimum household needs (sanitary facilities, drinking water).

–Organizing control of the technical condition of the vehicle (visual inspection, replacement of fluids).

–Providing reference or navigation information about the route.

The range of services that can be provided by driver rest areas is given in Table 5.10.

Table 5.10 – The range of services that can be provided by driver rest areas

Service Category	Possible elements/services
Parking	Asphalted areas for short-term stops
Household Needs	Benchmarks, canopies, toilets (stationary or dry toilets), drinking water
Information Support	Route signs, road maps, QR codes for information
Security	Lighting, video surveillance, panic button, security (sometimes)
Cleanliness Maintenance	Trash cans, sorting containers, regular cleaning
Communications	Chargers, Wi-Fi (in developed areas)
Technical Support	Tire pump, pressure test stand, basic tools
Medical Care	First aid kit, sometimes first aid kit or medical call

Design and location features:

–It is recommended to place them every 30–50 km on roads of international importance.

–They should have convenient entry/exit points, and not pose a danger to other road users.

–They should be oriented towards rest standards for truck drivers (legally regulated sleep/rest hours).

–They should be accessible to people with disabilities.

Examples of services on European analogues. Many EU countries use the following formats:

–"Rest Area" - standard parking + toilets.

–"Service Area" - includes gas stations, restaurants, hotel/motel.

–"Park & Sleep" - allows you to stay overnight with minimal comfort.

Rest areas for drivers are non-profit or low-profit enterprises that play an important social function in the road service system. They contribute to reducing accident rates, improving the quality of auto tourism, and creating conditions for rational organization of road traffic. Their development is one of the priorities of Ukraine's integration into the European transport infrastructure.

Road maintenance complexes

Road service complexes are multifunctional road infrastructure facilities located along highways, designed to meet the needs of road users (drivers, passengers, tourists) in fuel, maintenance, recreation, food, overnight accommodation, information and security.

Road service complexes are a key element of the road service system, integrating several types of services in one place.

Functions of road service complexes:

–Vehicle maintenance (refueling, washing, minor repairs, parking).

–Driver and passenger service (rest, food, hygiene conditions, overnight accommodation).

–Information support (tourist information, road map, navigation).

–Ensuring safety and emergency assistance (communications, security, evacuation services).

–Meeting domestic and social needs (trade, Internet, sanitary facilities, medical care).

–Creating conditions for effective international and transit transportation.

The range of services that can be provided by road service complexes is given in Table 5.11.

Table 5.11 – The range of services that can be provided by road service complexes

Transport services	Driver and passenger services	Trade and household services	Information and navigation services
–Gas station (gas station, LPG, electric charging) –Car wash, tire fitting, mini-service –Parking lot with video surveillance, security, reservation of places –Terminals for monitoring technical condition	–Cafes, restaurants, fast food –Sanitary and hygienic areas (WC, showers, children's rooms) –Hotel or motel –Recreation area with Wi-Fi, benches, shady canopies –Medical station or pharmacy kiosk	–Shop (minimarket, auto supplies, souvenirs) –Post office, ATM, account replenishment terminal –Vending machine with coffee, snacks, charging stations for gadgets	–Map of the area, routes, weather conditions –Road information (traffic jams, repairs, accidents) –Tourist information (QR codes, brochures, screens)

Road maintenance complexes, as elements of highway infrastructure, must comply with state, construction, sanitary and European standards that guarantee functionality, safety, comfort and sustainability of their operation. This compliance covers the design, construction, operation and modernization of facilities.

1. European standards and directives

1.1 Safety and quality of service standards:

–Directive 2010/40/EU – on intelligent transport systems (ITS), provides for the integration of digital services in ITS: Wi-Fi, navigation, online booking.

–Directive 92/106/EEC – on combined transport: ITSs serving freight transport must have special logistics areas.

–EN 13816 – a quality standard for transport services (including roadside services), covers comfort, information support, accessibility, safety.

1.2 Safe and Secure Truck Parking Areas (SSTPA) standards:

–EU Safe and Secure Truck Parking Areas (SSTPA) – a European standard for truck parking areas within ITSs.

–Mandatory requirements: lighting, video surveillance, security, toilets, showers, catering services, communication terminal.

–Certification levels (basic - bronze - silver - gold).

–Requires online seat booking, integration with transport logistics.

1.3 Environmental requirements (Green Infrastructure):

–ISO 14001:2015 - environmental management system of enterprises.

–Directive 2008/50/EC - air quality in the service area.

–EU Green Public Procurement (GPP) - recommendations for sustainable building materials, LED lighting, solar panels, treatment plants.

2. Functional and planning requirements. Areas required for KDO (according to DBN and EU practice):

–Transport zone - access roads, parking (cars, trucks, buses), maneuvering areas.

–Pedestrian zone - safe crossings, navigation, lighting.

–Service zone - gas station, car wash, service station, tire fitting.

–Residential area – cafe, motel, bathrooms, showers.

–Shopping area – mini-market, pharmacy, ATM.

–Information area – scoreboard, info stand, electronic screens.

–Greening and recreation – squares, benches, playgrounds.

3. Requirements for inclusiveness and universal design

–Installation of ramps, lowered curbs, tactile tiles.

–WC, shower cabins, receptions – taking into account the requirements for people with disabilities.

–Availability of Braille marking, voice messages, visual information.

–Parking spaces with a mark for people with disabilities – at least 4% of the total number.

4. Digital and innovative standards

–Intelligent parking management system – Smart Parking, Online Booking, e-Check-in.

–Integration with GPS navigation: Google Maps, Waze, Truck Parking Europe.

–Charging stations for electric vehicles – according to Type 2 (IEC 62196), CCS2 standards.

Compliance of road maintenance complexes with modern standards is not only a regulatory requirement, but also a competitive advantage. Complexes built according to SSTPA, ISO, EN standards provide a high level of comfort, safety, sustainable development, contribute to the growth of transit traffic, the development of auto tourism and the integration of Ukraine into the European road space.

Examples of European analogues:

–Autohof (Germany) – private complexes with a high level of comfort.

–Aire de Service (France) – road zones with a full range of services.

–Service Station (Great Britain) – often integrated with shopping centers.

Road service complexes are integrated enterprises that combine transport, household, tourist and information services within one facility. They provide convenience, comfort and safety for all road users, contribute to the development of auto tourism, transit transportation, integration with the international transport system.

Road transport enterprises are an important component of the transport infrastructure, ensuring the effective functioning of both passenger and freight transportation, related maintenance, repair, storage and infrastructure support of rolling stock. In modern conditions, the diversity of such enterprises is growing significantly, and although the classification remains a useful systematization tool, it is rather conditional. This is explained by active cooperation between enterprises, the combination of functions and the integration of services within single logistics or service complexes.

The functioning of modern automobile service enterprises is based on the implementation of international quality standards (ISO 9001, TAPA, IATF 16949), environmental standards, innovative technologies and digital management platforms. A special role is played by comprehensive customer service

- the creation of full-fledged service clusters (for example, road service complexes), combining the functions of transport, recreation, trade, technical and information support.

In general, the modern system of road transport enterprises acquires features of multifunctionality, flexibility and orientation towards integrated service of logistic and consumer needs. This approach ensures not only the growth of the efficiency of the industry, but also adaptation to the conditions of sustainable development, digitalization and global mobility.

5.2 Organization of production processes at road transport enterprises

The organization of production processes at road transport enterprises is the basis for effective activity and competitiveness in the transport services market. It covers a set of actions aimed at ensuring the efficient, technically sound, economically feasible and environmentally safe functioning of rolling stock and related infrastructure.

The main production processes at road transport enterprises include: transportation (freight or passenger), maintenance and repair of vehicles, refueling with fuel or electricity, preparation and release of vehicles to the line. Auxiliary processes include accounting and analysis of operational indicators, storage of spare parts and materials, energy supply, waste disposal. Service processes include repair of equipment and tools, transport and warehouse operations, as well as administrative and business maintenance (see also Fig. 5.12).

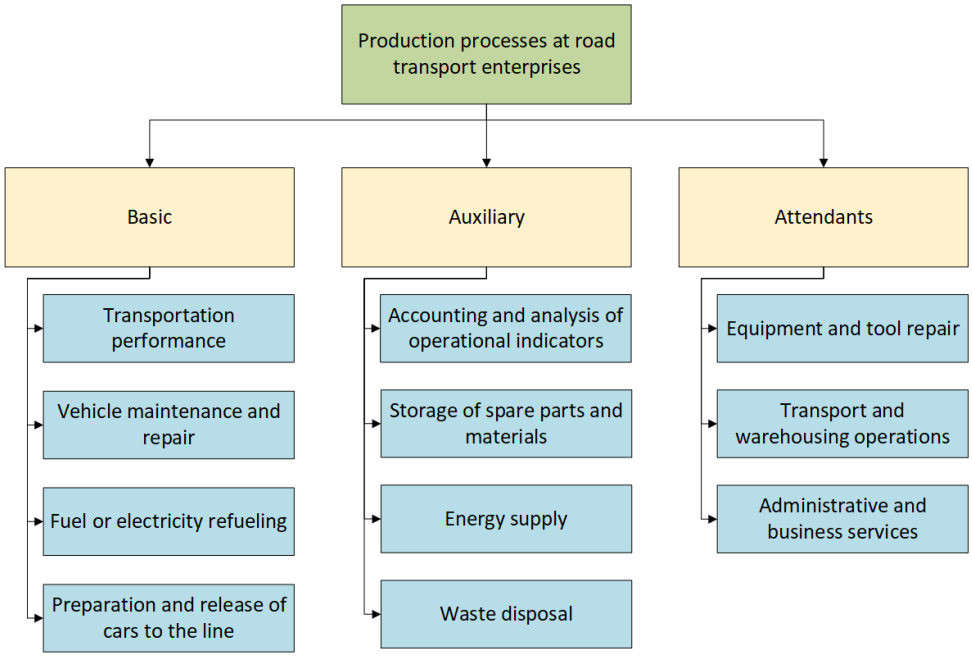

Figure 5.12 – Types of production processes at road transport enterprises

The organization of production processes is based on a number of principles: continuity, rhythm, proportionality, flexibility and complexity. They contribute to the optimal use of resources, minimization of costs and downtime, and ensuring stable operation of the enterprise (see also Figure 5.13).

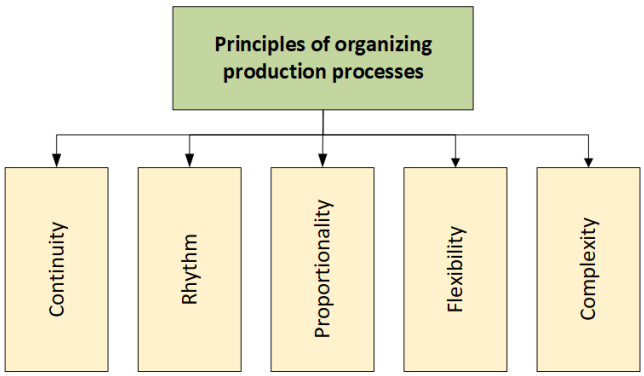

Figure 5.13 – Principles of organization of production processes at road transport enterprises

By the nature and volume of work, there are current (conveyor), district (shop), individual and modular (service-cluster) types of organization of production processes. Current processes are characteristic of large enterprises that carry out mass maintenance. District - inherent in medium-sized ATP with a shop structure. Individual - used in small enterprises or when servicing specialized equipment. Modular systems are becoming widespread in modern service complexes that combine various functions within one enterprise (see also Fig. 5.13).

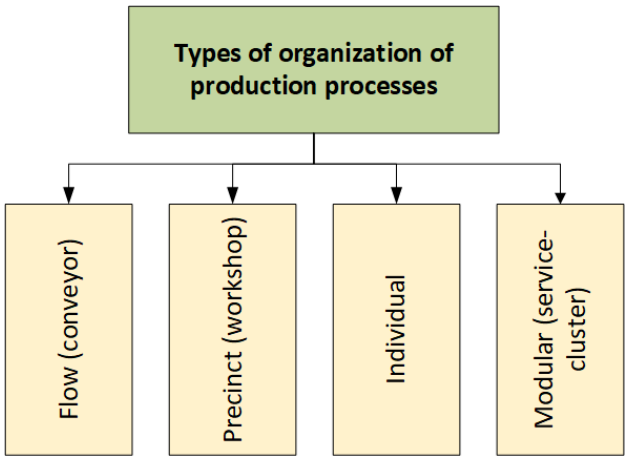

Figure 5.14 – Types of production process organization

Modern production process organization is increasingly based on digital technologies: the use of ERP and CRM systems, telemetry, RFID tags, automated dispatching systems, online technical condition monitoring, electronic document management. This makes it possible to increase the efficiency of management decisions, ensure accurate cost accounting, timely maintenance, and flexible resource planning.

In conditions of market competition, road transport enterprises are increasingly moving to a service-oriented management model, when instead of highly specialized activities, they provide a wide range of interconnected services for the consumer - from transportation to full support of logistics and service solutions. This requires new approaches to the organization of production, flexible structures, a high level of standardization and compliance with international standards (ISO 9001, IATF 16949, TAPA, etc.).

Thus, the effective organization of production processes is a key condition for the functioning of modern road transport enterprises, ensuring their stability, economic profitability and competitive advantages.

5.2.1 Rational organization of production processes at a motor transport enterprise

Rational organization of production processes at a motor transport enterprise provides for the effective, uninterrupted and economically feasible activity of all departments related to transport service, maintenance and repair of vehicles. Such an organization is based on a number of principles, including those

shown in Figure .13, the observance of which ensures the achievement of a high level of productivity, safety and quality of service provision.

Firstly, the principle of continuity provides for the constant flow of the production process without delays and downtime. This applies to both maintenance and repair work, which must be coordinated in time and resources.

Secondly, the principle of specialization consists in the division of labor between individual sections or workplaces in accordance with the nature of the work performed. This allows you to improve quality, speed up operations and make better use of equipment and personnel.

The principle of direct flow provides a logical and minimal trajectory of the vehicle's movement during its passage through the production stages - from acceptance to delivery. Optimizing the movement of vehicles, units and materials reduces time and energy costs.

The principle of rhythm contributes to the stable loading of all divisions of the enterprise. Due to uniform planning of work, better organization of work is achieved, queues are reduced and peak loads are avoided.

The principle of parallelism allows several interconnected operations to be performed simultaneously. This significantly reduces the total duration of maintenance or repair, increasing labor productivity.

The principle of mechanization and automation is aimed at reducing physical loads on employees, increasing the accuracy and speed of operations. The use of modern equipment and software allows for more effective management of enterprise resources.

The principle of ergonomics and safety is focused on creating comfortable, safe and convenient working conditions. Rationally organized workplaces help reduce employee fatigue and prevent industrial injuries.

The principle of adaptability ensures the flexibility of production processes, which allows the enterprise to quickly respond to changes in working conditions, types of serviced vehicles or volumes of work.

The principle of economy involves minimizing resource consumption without compromising the quality of operations performed. Optimization of technological routes, rational use of materials and energy, reduction of losses - all this contributes to reducing the cost of services.

The principle of environmental friendliness and energy efficiency requires compliance with current regulations on emissions, waste disposal, water and electricity use. Modern the motor transport enterprises must implement environmentally friendly technologies and resource-saving solutions.

Therefore, the application of the above principles in combination allows achieving a high level of efficiency of production processes at a motor transport enterprise. They are the basis for building organizational structures, placing equipment, determining the route of vehicles, planning working hours and ensuring the quality of transport services.

The organization of the production process at a motor transport enterprise depends on its profile, scale, number and type of rolling stock, as well as the nature of transportation. Below is a typical example of the organization of the production process at a motor transport enterprise that carries out transportation. Since the production process contains many constituent elements, only its main stages are shown in Figure 5.15.

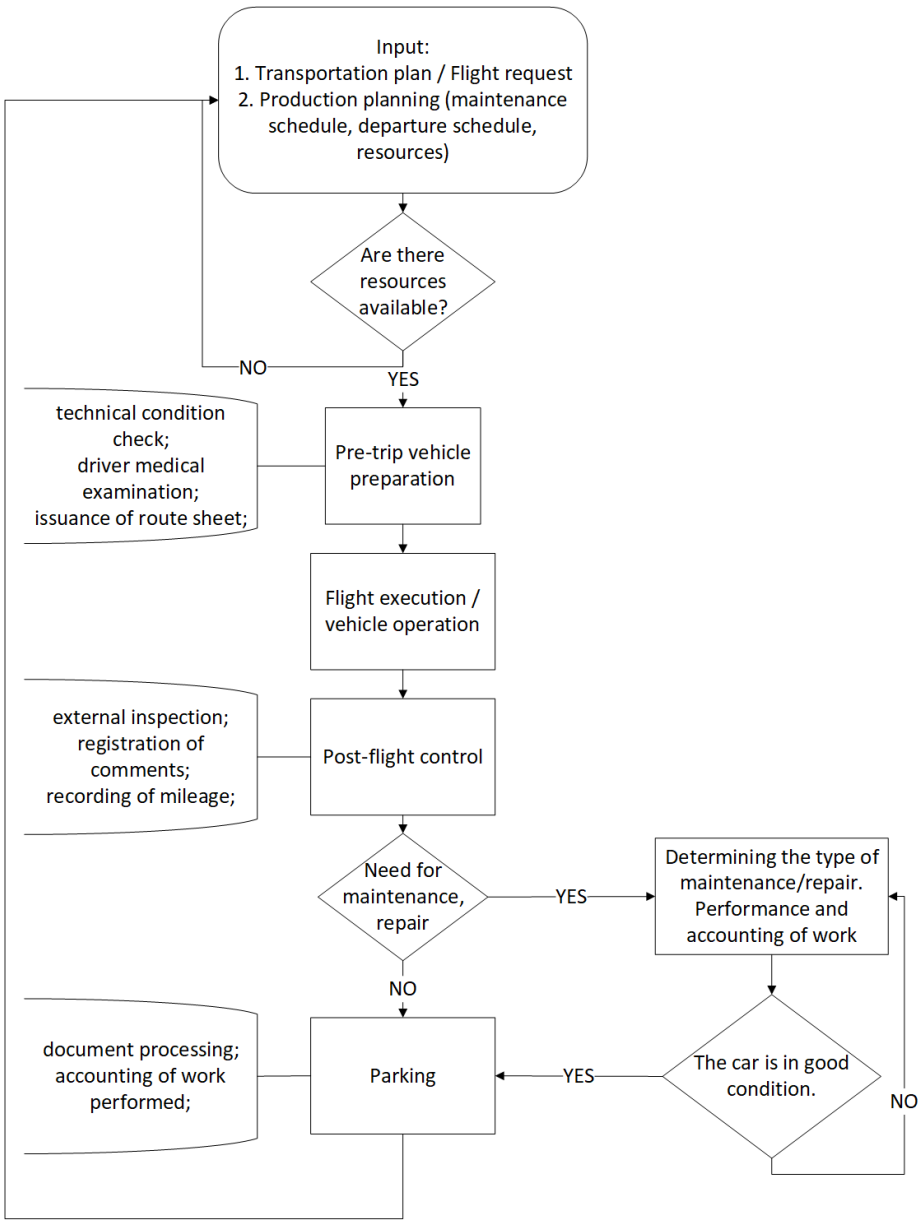

Figure 5.15 - Typical production process at a motor transport enterprise

The organization of the production process at a motor transport enterprise involves a clearly coordinated sequence of actions - from planning transportation and preparing vehicles to performing flights, maintenance and analyzing operational efficiency. The cyclical nature of the process ensures the continuous readiness of the fleet for work, increases the reliability of vehicles, reduces downtime and promotes the economical use of resources. The rational organization of each stage of the process is a key factor in the effective functioning of the enterprise and a guarantee of the quality provision of transport services.

5.2.2 Principles of rational organization of production processes at car service stations

The organization of production processes at car service stations is an extremely important component of ensuring the reliability, safety and efficiency of vehicle operation. Rational design and operation of these processes is based on a number of principles, the observance of which allows optimizing the use of resources, improving the quality of customer service and reducing costs.

The principles of rational organization of production processes at car service stations are somewhat similar to the principles of organizing production processes at motor transport enterprises.

1. The principle of specialization. Service stations should have a clear division of functions between individual production areas, zones and posts according to the types of work: diagnostics, maintenance,

current repairs, electrical maintenance, tire fitting, etc. This approach allows achieving greater productivity and improving the quality of work.

2. The principle of continuity and consistency. The organization of processes should ensure the smooth movement of the car within the car service stations – from acceptance to delivery after service. All stages must be clearly coordinated to avoid delays, queues and downtime.

3. The principle of directness. The movement of the car must be organized according to a logical straight-line scheme with a minimum number of reverse or transverse movements. This allows you to reduce the time the car stays at the service station and improve accounting discipline.

4. The principle of parallel work execution. Some operations can and should be performed simultaneously, if this does not create obstacles in the work. This allows you to significantly reduce service time.

5. The principle of rhythm. Stable and uniform loading of the service station's production capacities allows you to avoid overloading during peak hours and downtime during "dead" periods. It is achieved through preliminary planning, electronic queue, and preliminary registration of customers.

6. The principle of mechanization and automation. The widespread use of lifts, automatic diagnostic systems, balancing and tire changing machines allows you to reduce the labor intensity of work, increase accuracy and reduce service time.

7. The principle of ergonomics and safety. Rational organization of workplaces, optimal equipment height, lighting, ventilation and convenient access to tools and materials contribute to comfortable and safe work of personnel.

8. The principle of adaptability. Service stations must be ready to service different makes and models of cars, as well as adapt to new technologies (for example, electric cars or hybrids). This involves a flexible structure of production processes, staff training, and equipment upgrades.

9. The principle of economy. Rational use of consumables, electricity, water, optimization of the number of personnel and reduction of unproductive costs - all this reduces the cost of services and increases the competitiveness of service stations.

10. The principle of environmental friendliness. Service stations are obliged to comply with environmental protection requirements, provide for the presence of treatment facilities, and dispose of waste fluids and filters in accordance with current legislation.

11. The principle of customer orientation. Rational organization of production at a service station provides not only high-quality work, but also convenient reception of customers, transparency of pricing policy, guarantees, information about the status of the order, etc. Thus, the effectiveness of the service station depends on a harmonious combination of technological, organizational, technical and social factors. Compliance with the principles of rational organization of production processes ensures stable operation of the enterprise, customer satisfaction and compliance with modern industry requirements.

The production process at a service station is aimed at ensuring high-quality, timely and safe maintenance and repair of vehicles. Its structure usually additionally includes interaction with the client.

Figure 5.16 shows the main stages of the production process at a car service station.

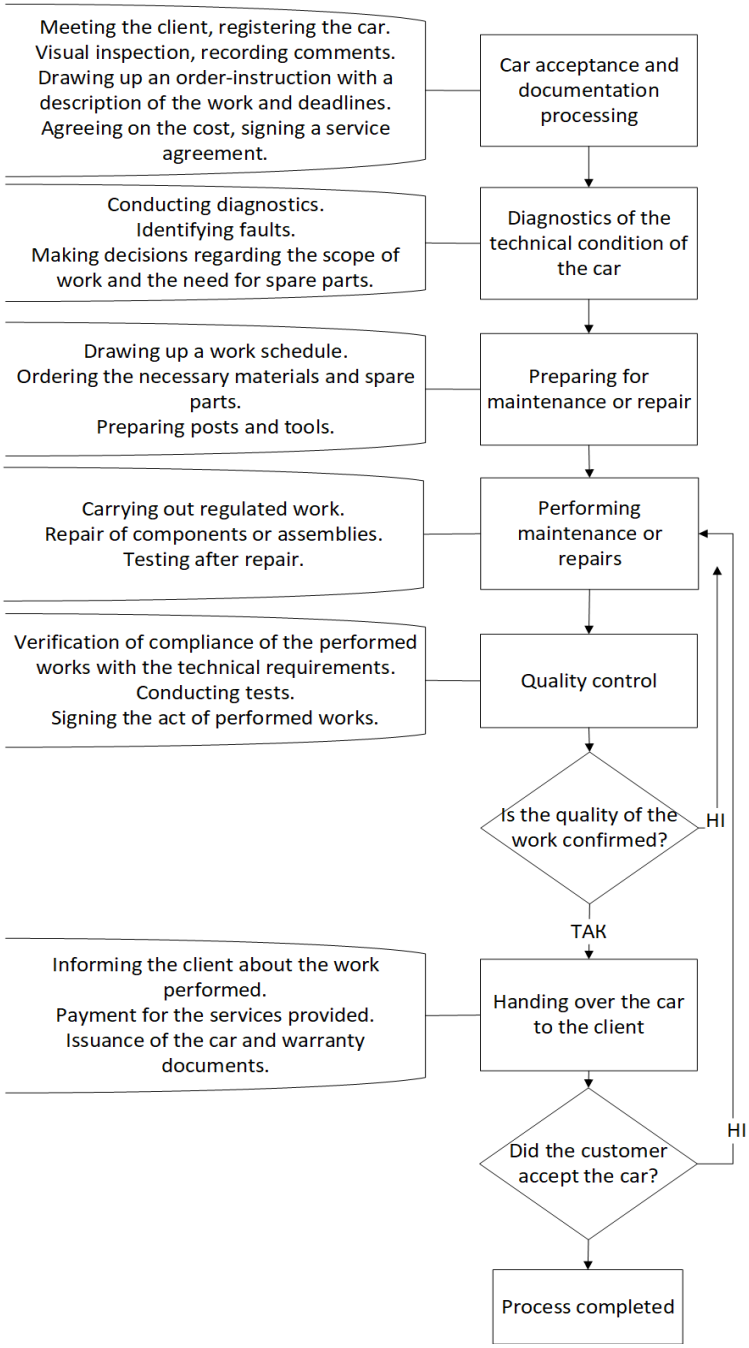

Figure 5.16 – Typical production process at a car service station

The organization of the production process at a car service station is a multi-stage, logically ordered system of actions aimed at timely detection and elimination of technical malfunctions of vehicles. Rational work planning, high-quality diagnostics, clear control at each stage, the use of modern equipment and orientation towards meeting customer needs ensure the efficiency of the service station, increase road safety and extend the service life of cars.

5.2.3 Modern trends in organizing production processes at road transport enterprises

The organization of production processes at road transport enterprises is rapidly changing under the influence of digital transformation, sustainable development requirements, globalization, as well as growing consumer expectations. Modern approaches involve a combination of flexibility, efficiency, manufacturability and environmental friendliness. The main trends and best practices can be characterized as follows.

1. Digitalization and automation. Digital technologies are increasingly used in the production activities of road transport enterprises. The use of enterprise resource management systems (ERP), production (MES),

electronic document management, CRM systems provides transparent planning, control and monitoring of processes in real time. The role of automated diagnostic complexes, robotic service posts and online services for customers is growing, which significantly increases the quality and speed of service provision.

2. Consumer orientation. Production processes are increasingly focused on customer needs. Individualization of service, formation of personalized service packages, open access to vehicle service history, digital communication channels ensure a high level of customer satisfaction. The use of customer databases, loyalty systems and electronic booking allows for more effective management of the flow of customers.

3. Implementation of lean production principles (Lean Production). The Lean methodology is increasingly used to reduce losses, increase resource efficiency, and optimize logistics within the enterprise. The use of 5S, Kaizen, and Kanban tools helps improve the production environment, reduce work time, and reduce service costs while maintaining high quality.

4. Greening of production. One of the key trends is the implementation of environmental responsibility principles. Modern road transport enterprises implement environmental management systems in accordance with the ISO 14001 standard, carry out energy-efficient modernization of production sites, minimize harmful emissions, organize waste collection and disposal, and use environmentally friendly materials.

5. Integration into logistics and information systems. Successful organization of production processes is based on integration with internal and external logistics systems. GPS monitoring, telematics and diagnostics systems allow real-time monitoring of the technical condition of vehicles and optimization of maintenance. Integration with supplier databases ensures prompt supply of spare parts and consumables.

6. Implementation of international standards. Modern enterprises strive to comply with international standards of quality (ISO 9001, IATF 16949), occupational health and safety (ISO 45001), environmental safety (ISO 14001). This contributes to increasing customer trust, systematization of processes and reduction of production risks. Internal regulations, technological maps and operational standards become quality assurance tools.

7. Staff development. Professional development of employees remains a critical factor in the effective organization of production processes. Continuous training, certification, adaptation to work with new technologies, development of competencies in the field of digital tools and customer service form the sustainable competitiveness of the enterprise.

Modern production processes at road transport enterprises are based on the principles of efficiency, adaptability, customer orientation and sustainable development. The combination of digital technologies, quality standards, an environmental approach and continuous improvement ensures the stable functioning of enterprises in a changing market and growing competition.

5.2.4 Logistics of internal production flows

Logistics of internal production flows at road transport enterprises is a system of organization, management and optimization of material, information and labor flows within the enterprise, which ensures the effective functioning of all its production units. For road transport enterprises, it is of particular importance, since it directly affects the efficiency of technical maintenance, repair and operation of vehicles, as well as the overall economic feasibility of production activities.

The logistics of internal flows includes the movement of resources (spare parts, consumables, tools), the organization of internal transport, the transfer of information between units, as well as the rational placement of equipment and service areas.

The main elements of the logistics of internal production flows are:

–material flows (parts, assemblies, units, lubricants, vehicles that move between the divisions of the enterprise),

–information flows (technical documentation, tasks, route sheets, reports on the status of work),

–labor flows (personnel movement between production areas, distribution and sequence of work, communication within the divisions).

The functions of internal logistics are to ensure the continuity of the production process, minimize vehicle downtime, optimize the use of space and equipment, timely supply of materials to workplaces, integration with digital accounting and planning systems, and rationalize movement routes within the enterprise.

The rational organization of internal logistics is based on the following principles:

–minimization of movements, which involves compact placement of divisions and logical sequence of the technological process;
–standardization of logistics routes to avoid chaotic movements;
–transparency of flows through labeling, visualization and automated monitoring tools;
–flexibility in responding to changes in the production program;
–compliance with the safety of material and personnel movement.

Modern internal logistics tools include warehouse management systems (WMS), internal transport (trolleys, electric cars, conveyors), RFID tags for tracking resources, visual management systems and electronic document flow. These technologies make it possible to significantly increase production efficiency and minimize the risks of errors and downtime.

In the practical activities of a motor transport enterprise or a service station, internal logistics is implemented through clear planning of vehicle traffic routes, automated provision of posts with the necessary materials, digital control over the stages of work, as well as operational management of personnel and production facilities.

Effective logistics of internal production flows is a critically important element of the functioning of a motor transport enterprise or a service station. It contributes to increasing labor productivity, reducing costs, improving the quality of services and customer satisfaction. Modern logistics is based on the principles of systematicity, technological sophistication, and digital integration, which ensures the stable development and competitiveness of the enterprise.

5.3 Production process management

Production process management is one of the key areas for ensuring the effective functioning of road transport enterprises and service stations. It is thanks to proper organization and management that all stages of maintenance, repair, logistics and operation of vehicles are carried out in a timely manner, with high quality and with minimal costs.

In modern conditions, production process management goes beyond purely administrative activities - it integrates elements of digitalization, systems analysis, quality management, risks and innovations. The growing complexity of transport systems, high requirements for safety, environmental friendliness, reliability and economic efficiency require managers to use flexible and adaptive approaches.

This section is devoted to the main aspects of production process management at road transport enterprises. It considers the functions and tasks of management, modern models and methods, the control system, as well as planning and optimization tools that allow you to increase productivity, reduce costs and ensure the quality of work in accordance with standards.

Knowledge and understanding of the principles of production process management are essential for future specialists in the field of road transport, as they enable them to effectively solve problems in a competitive market, unstable environment, and rapid technological changes.

5.3.1 Planning, control, analysis and regulation of production activities

Management of production processes at road transport enterprises and technical service stations is based on four key functions (Figure 5.17): planning, control, analysis and regulation. These functions are integrated into the quality management system in accordance with the requirements of the international standard ISO 9001:2015, which contributes to achieving stable quality of services, increasing customer satisfaction and continuous improvement of the enterprise's activities.

Production planning. In the context of ISO 9001, planning includes not only defining goals and resources, but also assessing risks and opportunities that may affect the achievement of results. Planning should comply with the principles of a process approach, customer orientation and continuous improvement.

Types of planning:

–Strategic (long-term) - development of long-term goals in accordance with the context of the organization and the expectations of stakeholders.
–Tactical (current) - specification of work volumes, resource allocation, planning of maintenance, repairs, logistical flows.
–Operational - planning of production tasks for a shift or day, according to workload and priorities.

Planning also includes change management, assessment of process efficiency and determination of performance indicators (KPI).

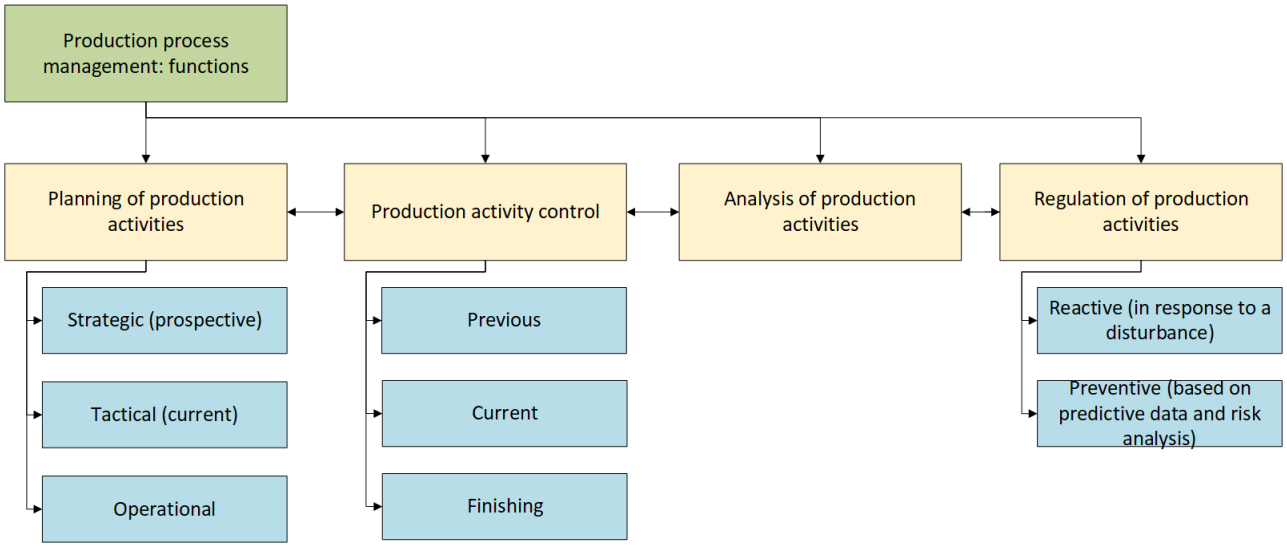

Figure 5.17 – Production process management functions integrated into the quality management system in accordance with the requirements of the international standard ISO 9001:2015

Production control. Control, according to ISO 9001, involves monitoring processes and products to ensure compliance with established quality criteria. It is carried out taking into account risk-based thinking and is based on documented QMS procedures.

Control includes:

–verification of compliance with technological maps;
–monitoring the condition of equipment and measuring instruments;
–control over resource consumption;
–assessment of compliance of services with customer requirements;
–keeping records of control results (quality records, inspection protocols, reports).

Control is carried out at all stages: preliminary, intermediate and final, in accordance with the specified acceptance criteria.

Analysis of production activities. The analysis is carried out by management in accordance with section 9.3 of ISO 9001, which provides for a management analysis procedure to assess the effectiveness of the QMS. The analysis covers:

–the level of achievement of quality objectives;
–the effectiveness of implemented measures;
–analysis of complaints and non-conformities;
–the status of implementation of maintenance plans;
–identification of bottlenecks and recurring defects;
–risk assessment and identification of opportunities for improvement.

Modern methods are used: data analysis, statistical process control (SPC) tools, cause-and-effect diagrams, PDCA cycles.

Regulation of production activities. Regulation (change management) involves operational or strategic intervention to ensure sustainable compliance of products and processes with established requirements. In the context of ISO 9001, this means:

–identifying and eliminating the causes of non-conformities;
–taking corrective and preventive actions;
–making changes to technologies, resource provision, documented procedures;
–verifying and validating changes;
–tracking the impact of regulatory actions on the overall performance of the process.

Regulation is closely related to the company's policy of continuous improvement and feedback to customers.

The functions of planning, control, analysis and regulation are interdependent elements of the production process management system. Their consistent and coordinated implementation forms a closed management cycle (PDCA – Plan-Do-Check-Act), which is the basis of the approach to quality defined by the ISO 9001:2015 standard.

1. Planning → Control. Planning determines:
   –what exactly needs to be done (goal, scope of work);
   –what resources will be involved (human, technical, material);
   –what quality criteria need to be achieved.

Based on the plan, reference indicators are formed, with which actual results are subsequently compared. Control provides feedback, checking the compliance of activities with these plans and standards.

2. Control → Analysis. Control provides data that becomes the subject of analysis. These include:
   –actual quality indicators;
   –cases of deviations or inconsistencies;
   –resource overspending;
   –failures in the implementation of work schedules.

Analysis allows you to identify:
   –causes of problems;
   –trends in production;
   –systemic weaknesses in processes.

3. Analysis → Regulation. Based on the analysis, decisions are made to intervene in production activities:
   –adjust plans or resources;
   –changes in process maps;
   –updating instructions or personnel training;
   –eliminating the causes of identified deviations.

Regulation is an active response to the results of the analysis, which ensures the stability and quality of the process.

4. Regulation → Planning. Regulatory actions and accumulated experience are taken into account in the next planning. Thus:
   –production schedules are improved;
   –time and resource standards are adjusted;
   –expected results are specified;
   –risk management measures are adapted.

This relationship ensures the cyclicality and continuity of process improvement in accordance with the principle of continuous improvement.

The functions of planning, control, analysis and regulation form the basis of effective management of production activities at motor transport enterprises. Their harmonious combination allows to ensure uninterrupted operation of transport, reduce costs, improve the quality of service and competitiveness of the enterprise in a market economy.

Integration of planning, control, analysis and regulation functions into the quality management system in accordance with ISO 9001:2015 allows motor transport enterprises to ensure:
–reliability and stability of production processes;
–predictable quality of services;
–efficient use of resources;
–increased customer confidence;
–competitiveness in the market.

The functions of planning, control, analysis and regulation form a single managed process, in which each stage logically follows from the previous one and influences the next. Their interaction is the key to systematic quality management, which allows you to promptly respond to deviations, make informed decisions and ensure continuous improvement of production activities at motor transport enterprises and service stations.

The use of the principles of the process approach, risk-based thinking and continuous improvement forms a modern culture of production management based on international standards.

5.3.2 Modern production process management systems

In modern business conditions, effective management of production processes at motor transport enterprises and service stations is impossible without the use of modern information systems. Such systems allow for comprehensive planning, accounting, control and optimization of resources and operations at all levels of the enterprise's activities.

1. ERP systems (Enterprise Resource Planning). Enterprise resource planning systems (ERP) provide centralized management of all major resources - personnel, vehicles, materials, spare parts, finances. Their functionality includes:

–planning of production task volumes;
–control and accounting of material resources;
–accounting of costs and revenues;
–integration of data from other management systems.

Examples of ERP systems: SAP ERP, Microsoft Dynamics, Odoo, 1C:Enterprise.

2. MES systems (Manufacturing Execution Systems). Manufacturing execution systems (MES) are focused on the operational management of production processes within individual workshops or production areas. They allow:

–to plan and coordinate production tasks;
–to keep records of completed work;
–to manage personnel in shift mode;
–to integrate with ERP systems for data transfer.

MES systems provide increased labor productivity, reduced downtime, and increased accuracy of technological operations.

3. CMMS systems (Computerized Maintenance Management Systems). Computerized maintenance and repair management systems (CMMS) are used to plan, record, and control equipment maintenance. CMMS functions include:

–automated formation of maintenance and repair schedules;
–vehicle maintenance history;
–parts and consumables inventory management;
–control of repair costs and maintenance efficiency.

Examples: Fiix, eMaint, Infor EAM, SoftExpert.

4. Transport monitoring and telematics systems (TMS, GPS, IoT). GPS navigation systems, telematics and IoT devices allow for real-time:

–control of vehicle location;
–monitoring of technical condition (fuel level, pressure, temperature, wear);
–assessment of driving style;
–detection of deviations in operating modes.

These systems integrate with ERP, CMMS and logistics platforms to ensure integrated management of the vehicle fleet.

5. BI and AI services (Business Intelligence and artificial intelligence). Analytical tools based on Business Intelligence (BI) and artificial intelligence (AI) open up new opportunities for:

–predicting technical malfunctions;
–analyzing the efficiency of production processes;
–identifying patterns in costs;
–decision-making based on large amounts of data (Big Data).

Systems of this class contribute to strategic management and increase the innovative potential of the enterprise.

6. Quality and documentation management systems (QMS, DMS). In the context of implementing quality management systems in accordance with the ISO 9001:2015 standard, special attention is paid to:

–quality management systems (QMS);
–electronic document management systems (DMS);
–modules for analyzing non-conformities and risks;
–corrective and preventive action management systems (CAPA).

They ensure that production processes comply with international requirements and are oriented towards continuous quality improvement.

Modern production process management systems at motor transport enterprises and service stations:

–provide automation of management decisions;
–contribute to the integration of various areas of the enterprise's activity;
–allow for the efficient use of resources and improvement of service quality;
–is an important element of the digital transformation in the automotive industry.

The use of such systems is the key to competitiveness, sustainable development and customer orientation.

5.3.3 Risk management as an element of production process management

In the conditions of dynamic development of the motor transport industry, increasing requirements for service quality and safety, as well as high technological complexity of production operations, the issue of risk management is becoming particularly relevant. Risk management is an integral part of a modern production process management system based on the principles of a standardized approach, in particular the requirements of the international standard ISO 9001:2015.

The concept of risk and risk management

A risk in production activities is the probability of an undesirable event that may negatively affect the achievement of planned results. Risk management involves a systematic process of identifying, assessing, analyzing, minimizing and monitoring risks in order to ensure the smooth and effective functioning of the enterprise.

Typical production risks of motor transport enterprises and service stations include:

–technical malfunctions of equipment or transport;
–shortage of material resources;
–personnel errors or violations of technological discipline;
–failures in logistics processes;
–deviations from the requirements of quality and safety standards.

The main stages of risk management are shown in Figure 5.18.

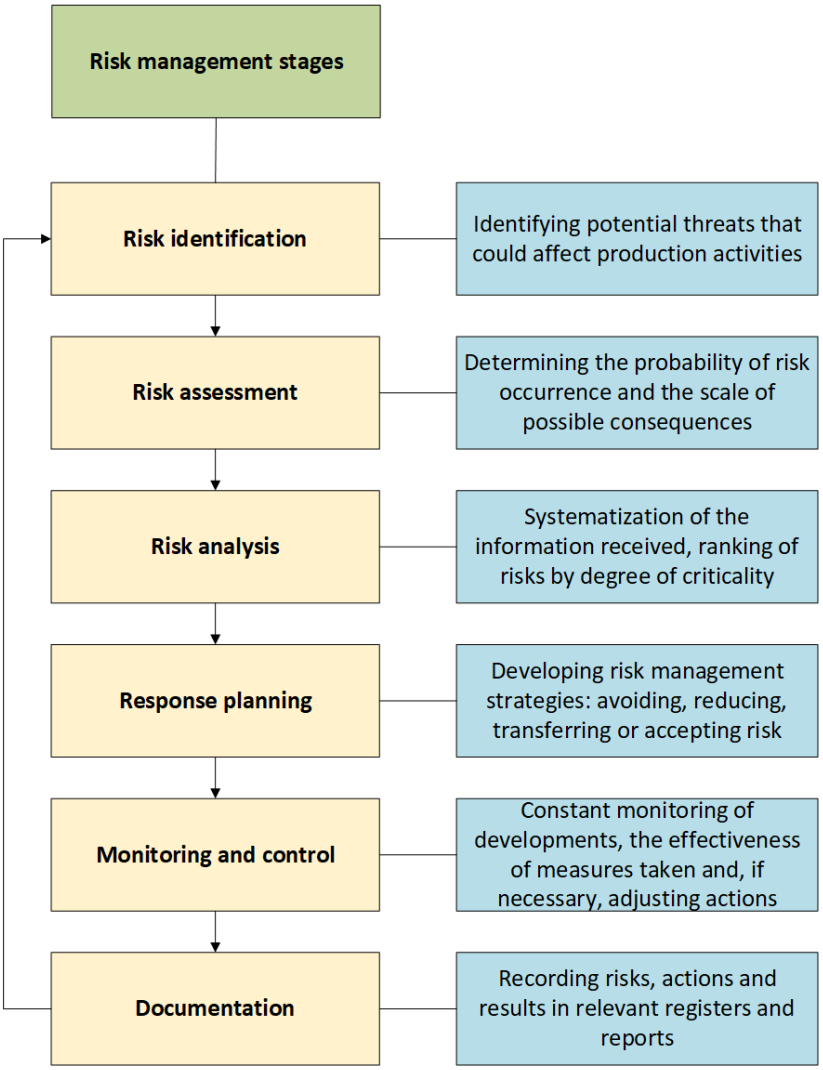

Figure 5.18 – The main stages of risk management

Risk management in production processes involves the sequential implementation of a number of stages, each of which is aimed at reducing the likelihood of negative events and mitigating their consequences. The figure presents a generalized scheme that reflects the key stages of risk management in accordance with best practices and requirements of the ISO 9001:2015 standard.

1. Risk identification

The first stage identifies potential threats that may negatively affect the course of production processes. These may be technical, organizational, economic or environmental risks that arise both in the internal environment of the enterprise and from the outside.

2. Risk assessment

The next step is to determine the probability of risks and the scale of their possible consequences. This allows you to establish the level of risk and focus attention on those threats that may have the greatest impact on production efficiency.

3. Risk analysis

The information collected is systematized, and risks are classified by degree of criticality. This stage allows you to develop priorities for further response.

4. Response planning

Specific risk management strategies are developed. These include:

– risk avoidance;
– reducing the likelihood or consequences;
– risk transfer (for example, through insurance);
– risk acceptance, provided it is acceptable.

5. Monitoring and control

Risk management is not a one-time act. The enterprise must constantly monitor the situation, analyze the effectiveness of the measures taken and, if necessary, adjust actions.

6. Documentation

All stages, decisions, actions and results must be properly recorded in internal reports, registers and procedures. This contributes to increased transparency, compliance with standards and the possibility of improving the management system in the future.

The use of such a structured model allows road transport enterprises to ensure continuity, predictability and quality of production activities even in conditions of high dynamics of the external environment and internal changes.

In modern practice, various risk management tools are used, including:

• risk matrix (probability × consequences);
• SWOT analysis – assessment of strengths and weaknesses, opportunities and threats;
• FMEA – analysis of types and consequences of potential failures;
• cause-and-effect diagrams (Ishikawa);
• analysis of event scenarios;
• CAPA (Corrective and Preventive Actions) system.

One of the most effective and widespread tools for visualizing, analyzing, and prioritizing risks in a production process management system is a risk matrix. It allows you to assess and classify risks according to two key criteria:

–the probability of risk occurrence,
–the degree (scale) of its consequences.

The risk matrix is an important element of a risk-oriented approach that allows an enterprise to:

–determine the level of acceptability of each risk;
–prioritize measures to avoid or reduce them;
–make informed management decisions;
–ensure compliance with the requirements of ISO 9001:2015 for risk management.

The matrix is built in the form of a table (Table 5.12), where:

–rows correspond to the degree of risk consequences (from insignificant to critical);
–columns - the probability of risk occurrence (from unlikely to very likely);
–the cells indicate the risk level: low, medium or high.

Table 5.12 – The risk matrix

The risk matrix	Low probability	Medium probability	High probability
Minor effects	Low risk	Low risk	Medium risk
Moderate effects	Low risk	Medium risk	High risk
Critical effects	Medium risk	High risk	Critical risk

Application example at a service station

Situation: There is a risk of a delay in the supply of spare parts at a service station.

- Probability: medium (failures occur approximately once every 2–3 months).
- Consequences: critical (stoppage of work, customer dissatisfaction, financial losses).

Risk level according to the matrix: high risk.

Management decisions:

–Implementation of a reserve stock of the most important parts in the warehouse;
–Establishing cooperation with alternative suppliers;
–Implementation of an automated ordering system.

The risk matrix allows you to clearly display risks, justify the need for management actions, prioritize them and ensure systematic risk management. Its simplicity and effectiveness make it indispensable for road transport enterprises, especially in the areas of technical maintenance, logistics and production.

In the production process management system, one of the simple and at the same time effective tools for assessing potential risks and opportunities is SWOT analysis. It is widely used in strategic planning, quality management, development of improvement measures and formation of risk management policy.

SWOT is an abbreviation of four English words:

S – Strengths,
W – Weaknesses,
O – Opportunities,

T – Threats.

This analysis allows you to assess internal factors (strengths and weaknesses of the enterprise) and the external environment (opportunities and threats), which allows you to:

–identify critical risks,

–determine development priorities,

–make informed management decisions.

In the context of risk management, SWOT analysis:

–helps to identify threats (risks) of external origin;

–identifies weaknesses that may contribute to the realization of risks;

–allows you to find opportunities to reduce the negative impact of risks;

–contributes to the formation of response strategies based on the strengths of the enterprise.

Example of SWOT analysis for a service station (Table 5.13).

Object: Medium-sized car service station.

Table 5.13 – Example of SWOT analysis for a service station

Strengths	**Weaknesses**
– Highly qualified staff – Modern diagnostic equipment – Availability of regular customers	– Lack of online recording system – Limited warehouse stocks – Insufficient level of digitalization of processes
Opportunities	**Threats**
– Partnership with car dealerships – Obtaining ISO 9001 certification – Expanding the range of services (electric vehicles)	– Fluctuations in spare parts prices – Entry of new competitors into the market – Decrease in demand due to the economic crisis

Management decisions:

–Implementation of online recording and CRM system;

–Formation of a strategic stock of the most popular spare parts;

–Marketing campaigns to attract customers from other regions;

–Analysis of cooperation opportunities with electric vehicle dealers.

SWOT analysis is an effective method for a comprehensive view of the situation at the enterprise. It allows you to translate abstract risks into specific management tasks, identify the enterprise's potential in countering threats and form balanced, flexible development strategies. Its use is especially effective at the stage of strategic planning of production activities or when assessing the implementation of changes.

One of the most effective tools for identifying and preventing potential failures in the production process or provision of services is the FMEA (Failure Modes and Effects Analysis) method - an analysis of the types and consequences of potential failures.

This approach is especially valued in quality management systems (in particular ISO 9001, IATF 16949) and is widely used in the automotive industry, logistics, and maintenance.

FMEA is a structured approach to:

–identifying potential types of failures (malfunctions),

–assessing the causes and consequences of each failure,

–determining the priority of eliminating or preventing the risk.

The method is based on calculating the risk index (Risk Priority Number, RPN) according to the formula:

$$RPN = S \times O \times D \tag{5.1}$$

where:

• S (Severity) – the severity of the consequences of the failure (rated from 1 to 10),

• O (Occurrence) – the probability of the failure occurring,

• D (Detection) – the probability of detecting the failure before it manifests itself.

FMEA Objectives

• Reduce the risk of failures at the design or process improvement stage;

• Identify critical points in the technological or service process;

• Optimize resources aimed at preventing or detecting failures.

An example of an FMEA for a service station maintenance area is given in Table 5.14.

Table 5.14 – An example of an FMEA for a service station maintenance

Potential Failure	Possible consequences	S	Causes	O	Failure detection	D	RPN
Incorrect Filter Installation	Oil leakage, engine failure	9	Incorrect instructions / inattention	6	Visual inspection	4	216
Missed Brake Diagnostics	Brake failure	10	Non-compliance with regulations	3	No double inspection	7	210
Use of Non-Genuine Parts	Reduced reliability, customer complaints	7	Economy, lack of stocks	5	Detected after operation	6	210

Management actions:

–Development of inspection checklists;

–Advanced training of craftsmen;

–Improvement of the component control system;

–Establishment of procedures for double checking critical elements.

The FMEA method is a powerful tool for preventive risk management. It allows not only to reduce the number of failures and malfunctions, but also to increase the quality of service, customer satisfaction, safety level and compliance with international standards. Its application at road transport enterprises ensures the systematic identification of weaknesses and the formation of effective response strategies.

One of the key tools for the systematic analysis of the causes of problems in production processes is the Ishikawa diagram, or the Fishbone diagram. This method is widely used to identify the root causes of deviations, failures and risks, as well as when implementing quality management systems in accordance with the ISO 9001 standard.

The Ishikawa diagram allows you to:

–visualize all possible causes of a specific problem or risk;

–classify these causes by category;

–identify the most critical factors of influence.

The problem or undesirable phenomenon is indicated in the “head of the fish”, and the main branches — “bones” — symbolize key groups of factors approach it at an angle.

Classical categories of causes (6M). The 6M model is often used in production and transport processes:

1. Man (People) — personnel, competence, discipline.
2. Machine — equipment, state of the art, tools.
3. Method — technology, regulations, instructions.
4. Material — raw materials, spare parts, fuel.
5. Measurement — quality control, diagnostic tools.
6. Mother nature / Milieu — temperature, humidity, road conditions.

An example of the use of a cause-and-effect diagram is shown in Figure 5.19. Main problem: Oil leakage after maintenance. Using the classic cause categories (6M), an Ishikawa diagram is constructed.

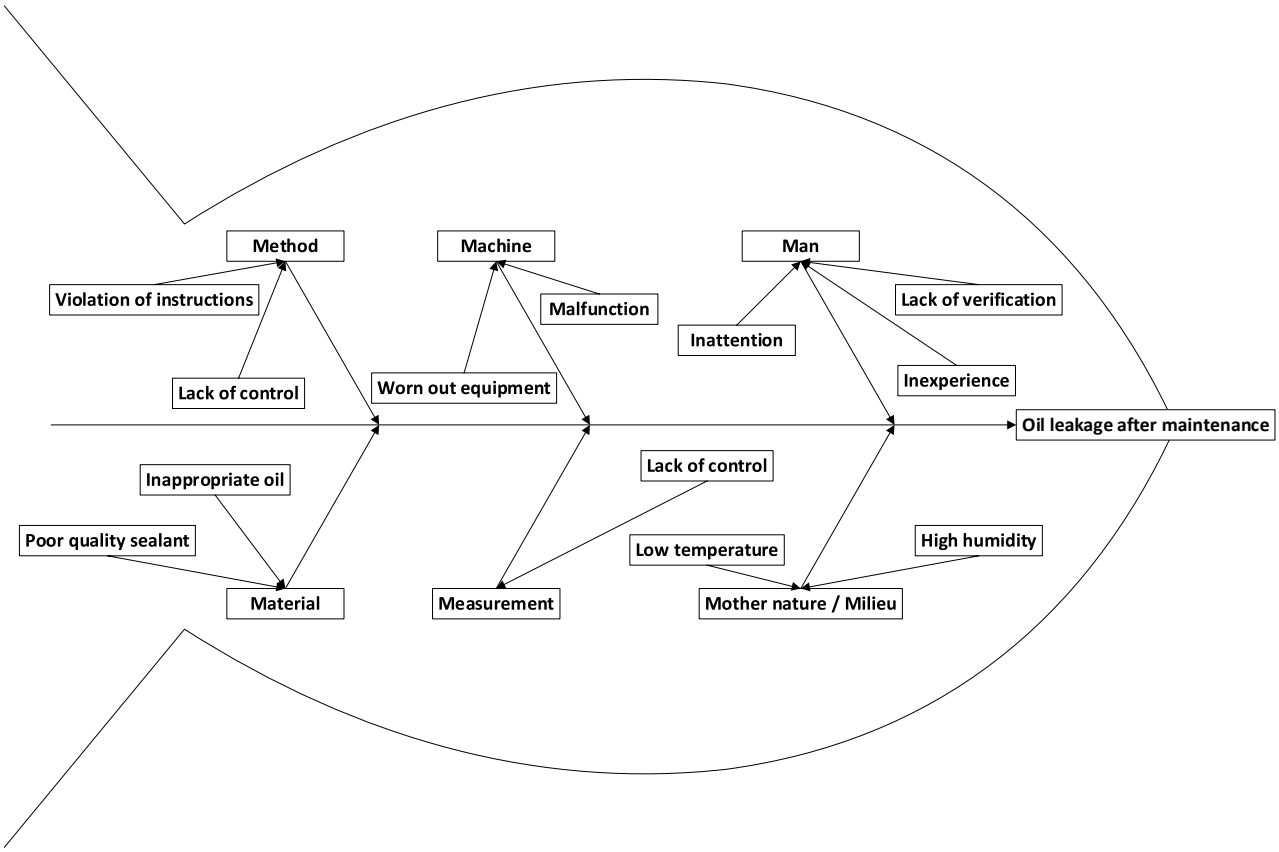

Figure 5.19 – An example of the use of a cause-and-effect diagram

These causes are analyzed and evaluated for their impact on the main problem. A risk prevention plan is then developed.

Advantages of the Ishikawa diagram

–Identification of complex and hidden causes;
–Stimulation of teamwork and brainstorming;
–Increasing awareness of employees about the impact on quality;
–Easy to use as part of internal audits or non-conformity analysis.

The cause-and-effect diagram is a powerful tool in the risk management system at road transport enterprises. Its use allows for a deeper understanding of the nature of problems, the development of effective failure prevention measures and the stability of production processes.

Scenario Analysis is a method of predicting the possible consequences of risk realization, which allows you to consider several scenarios, assess the probability of their occurrence and prepare appropriate actions.

This approach is an indispensable tool for risk management in conditions of uncertainty, where it is important to predict not only the probability of events, but also their impact on the activities of the enterprise. It is widely used in logistics, transport services, inventory management, and the design of security systems.

Scenario analysis is based on the construction of several scenarios:

–optimistic scenario - the best possible course of events;
–realistic (baseline) scenario - the most likely option;
–pessimistic scenario - the worst possible option, taking into account the realization of risks.

Each scenario is accompanied by:

–a description of the conditions and prerequisites,
–an assessment of the probability of implementation,
–an identification of the consequences for production activities,
–the development of response measures or an action plan.

An example of the application of scenario analysis of events is given below (Table 5.20).

Table 5.20 – An example of the application of scenario analysis of events

Scenario	Situation description	Consequences	Recommended actions
Optimistic	Delivery arrives early or exactly on time.	No disruptions to service schedule.	Scheduled work, possible acceptance of additional orders.
Realistic	Delay of 1–2 days due to logistical difficulties.	Possible short-term delays in order fulfillment.	Customer notification, record shift.
Pessimistic	Supplier does not deliver for a week or more.	Suspension of part of the work, customer dissatisfaction, losses.	Backup supplier, emergency warehouse, change of execution priority.

Advantages of scenario analysis:

–Allows you to assess a wide range of potential consequences;

–Increases the enterprise's readiness for non-standard situations;

–Provides informed planning and avoidance of impulsive decisions;

–Facilitates strategic decision-making in conditions of uncertainty.

Scenario analysis is a powerful preventive tool that allows road transport enterprises not only to assess possible threats, but also to form adaptive, flexible response strategies. It is an integral part of a modern risk management system that complies with the principles of ISO 9001 and other international quality standards.

CAPA (Corrective and Preventive Actions) is a system of corrective and preventive actions used to identify, analyze and eliminate the causes of non-conformities or potential risks. It is an integral part of quality management systems in accordance with ISO 9001, IATF 16949, GMP and other standards.

The purpose of the CAPA system is:

preventing the recurrence of problems (corrective actions),

–preventing potential problems (preventive actions),

–eliminating the root causes of non-conformities,

–increasing the efficiency of production processes.

The stages of CAPA implementation are shown in Figure 5.20.

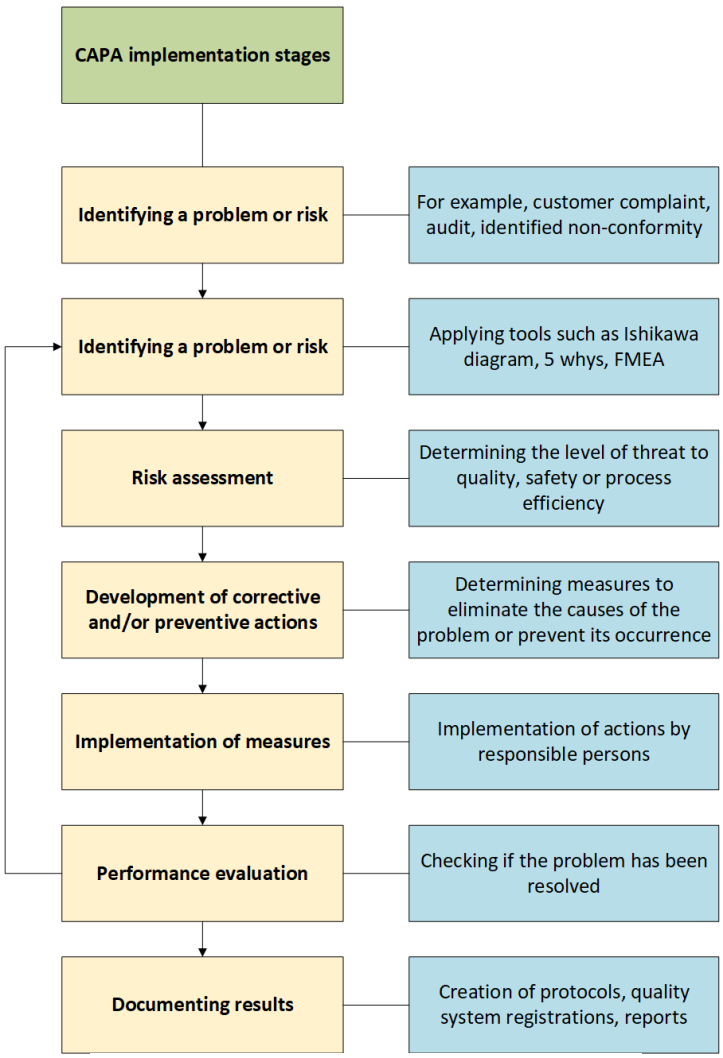

Figure 5.20 – Stages of CAPA Implementation

The figure 5.20 shows the stages of implementing the CAPA (Corrective and Preventive Actions) system, one of the key tools for risk management and quality assurance in road transport enterprises. It is constructed in the form of a flowchart that consistently reflects the logic of actions from identifying a problem to documenting the results.

Description of the stages of CAPA implementation:

Identifying a problem or risk. At this stage, situations that require attention are recorded: customer complaints, results of internal or external audits, registered non-conformities, etc.

Identifying a problem or risk. For a deeper understanding of the causes, methods are used: Ishikawa diagram, 5 "why" analysis, FMEA, etc.

Risk assessment. The level of threat to the quality, safety or efficiency of the process is determined. This helps to determine the priority of the response.

Development of corrective and/or preventive actions. Measures are determined that eliminate the cause of the problem (correction) or prevent its occurrence in the future.

Implementation of measures. Implementation of planned actions, appointment of responsible persons, control of deadlines.

Performance evaluation. Verifying whether the problem has been resolved or the planned results have been achieved.

Documenting results. Recording the results in appropriate reports, quality management system registers, creating protocols and reporting for audits.

Example of CAPA implementation at a service station (Figure 5.21). Situation: During an internal audit, it was found that 3 out of 10 vehicles had oil leaks after maintenance, caused by a leaky oil filter.

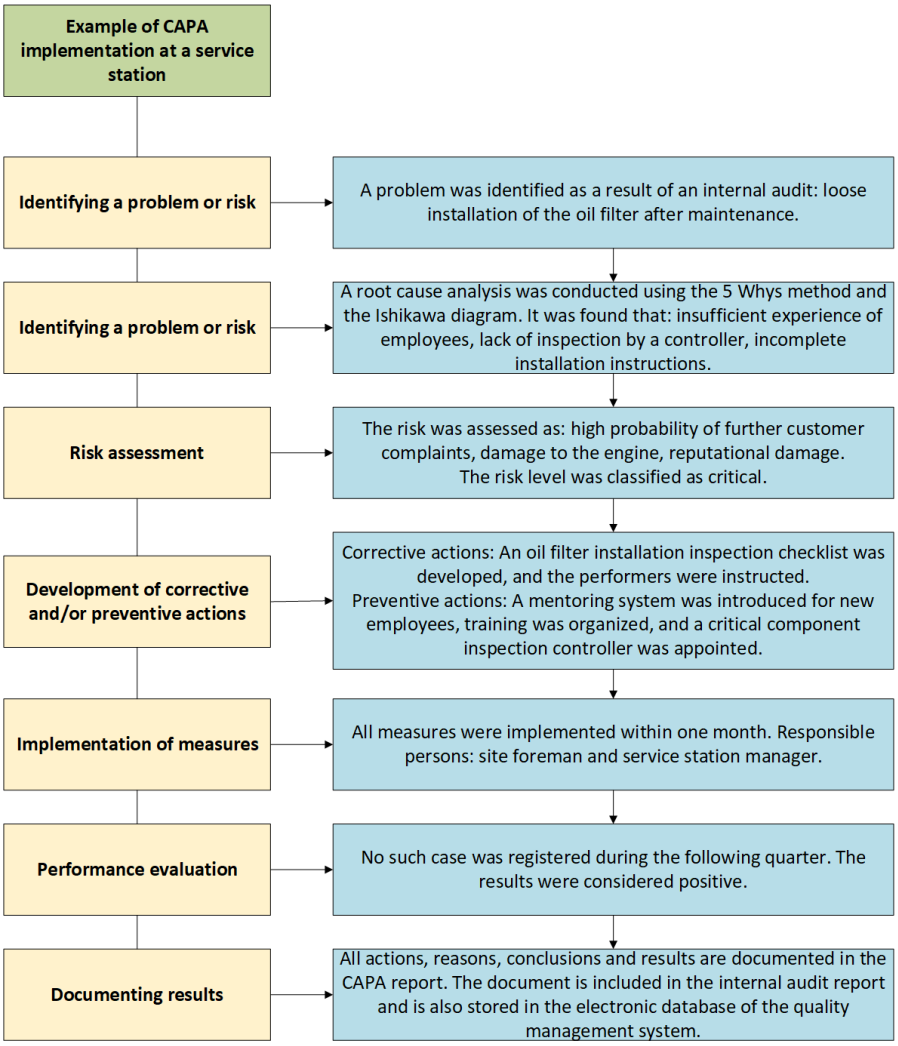

Figure 5.21 – Example of CAPA implementation at a service station

Timely application of CAPA allowed not only to eliminate a specific problem, but also to prevent its recurrence, improve the instructional base and increase the qualification of personnel. This contributed to reducing risks and increasing customer satisfaction.

The use of such tools contributes to making informed management decisions aimed at reducing risks.

Risk management according to ISO 9001:2015

The international standard ISO 9001:2015 provides for the application of risk-based thinking at all stages of the life cycle of products and services. This means that during process planning, risks should be identified and assessed, preventive measures should be implemented, their effectiveness should be analyzed and the results used for continuous improvement of the quality management system.

In particular, enterprises should:

• identify risks that affect product compliance with requirements;
• assess their criticality;
• implement management measures proportional to the level of risk;
• retain evidence of decisions made.

Management of production processes at road transport enterprises is a key component of the effective functioning of the industry. The main management functions include planning, control, analysis and regulation of activities, which should be carried out on the basis of the principles of a systematic approach, result orientation, continuous improvement and risk management.

Modern enterprises are actively implementing automated and digital production management systems (ERP, MES, QMS), which allows to increase the accuracy of planning, efficiency of decision-making and flexibility of production processes. Particular attention is paid to quality systems in accordance with the requirements of the ISO 9001 standard, which defines clear requirements for monitoring, analysis, corrective and preventive actions.

One of the important components of modern management is risk management, which allows to predict, assess and neutralize threats that may negatively affect the quality, safety and efficiency of processes. In this context, important tools are: analysis of event scenarios, SWOT analysis, risk matrix, Ishikawa diagrams, FMEA, as well as the CAPA system.

Effective management of production processes ensures:

–stability of the enterprise;
–reduction of production costs;
–increased level of customer service;
–competitiveness in a dynamic market environment.

Therefore, production management is not only a technical or administrative function, but a strategic tool for the sustainable development of road transport enterprises.

5.4 Quality of production processes

In today's conditions of increased requirements for the efficiency, safety and reliability of road transport, the quality of production processes is becoming a key factor in the competitiveness and sustainable development of enterprises in the industry. It is not only about the compliance of process results with established technical requirements, but also about the ability of processes to consistently provide the expected result at minimal costs and taking into account consumer needs.

Quality assurance at road transport enterprises covers all stages of activity: planning, preparation, implementation, control, adjustment and continuous improvement of processes. Of particular importance is the implementation of quality management systems (QMS) in accordance with international standards, primarily ISO 9001, which defines an approach to process management based on the principles of customer orientation, leadership, a process approach, improvement and fact-based decision-making.

This section examines the basic concepts of quality of production processes, requirements for their provision, quality management tools, as well as practical aspects of implementing QMS at motor transport enterprises, maintenance stations, logistics and service structures.

5.4.1 The concept of quality in the context of road transport enterprises

Quality in a broad sense is a set of properties of an object that determine its ability to satisfy established or expected needs. In the context of road transport enterprises, the concept of quality acquires a systemic, multifaceted nature, covering both the results of activity and the characteristics of the production processes themselves.

At road transport enterprises, quality is assessed not only by the technical parameters of products or services, but also by indicators of the efficiency of process organization, the level of customer satisfaction, the stability of results and compliance with regulations.

Key aspects of quality in the transport sector:

–Quality of transport service: timeliness, safety, convenience, accessibility of transportation.
–Quality of the production process: efficiency of work organization (maintenance, repair, logistics, etc.), compliance with standards and technologies, minimization of defects and downtime.
–Quality of the technical condition of vehicles: compliance with regulatory requirements, reliability, efficiency.
–Customer service quality: speed, accuracy of order fulfillment, service support, communication.
–Management quality: the ability of the enterprise to maintain and improve internal processes, taking into account risks, changes and feedback.

Specifics of understanding quality at different types of enterprises

–At motor transport enterprises, quality is associated with the optimality of routes, regularity and safety of transportation.
–At service stations, with the accuracy of repair and maintenance operations, the use of original materials and technical standards.
–For logistics centers, with the efficiency of warehouse processing, compliance with delivery deadlines.
–For gas stations and electronic fuel stations, with the reliability of dosing, fuel purity, speed of service.

–For leasing companies and car dealerships, with the transparency of conditions, reliability of equipment, after-sales support.

Modern enterprises consider quality not as a final result, but as a continuous process of improvement that affects all levels of the organization's functioning. The implementation of quality management systems focused on a process approach, risk analysis, staff involvement and customer feedback is a sign of the maturity of the enterprise and a guarantee of its competitiveness.

Thus, quality in road transport enterprises is a multidimensional concept that encompasses both technical, organizational and service components. Its provision is a systemic task that requires a comprehensive approach focused on continuous improvement of processes and satisfaction of user needs.

5.4.2 ISO 9001 Quality Management System at Road Transport Enterprises

ISO 9001 is an international standard that establishes requirements for a quality management system (QMS) at enterprises in various industries, including road transport. Its main goal is to ensure consistent quality of products or services, meet customer requirements, increase efficiency and continuously improve internal processes.

At road transport enterprises (service stations, logistics centers, car dealerships, gas stations, service companies, etc.), the implementation of ISO 9001 is an important tool for increasing operational excellence, customer trust and compliance with regulatory requirements.

The main principles of ISO 9001 relevant to the automotive sector are shown in Figure 5.22.

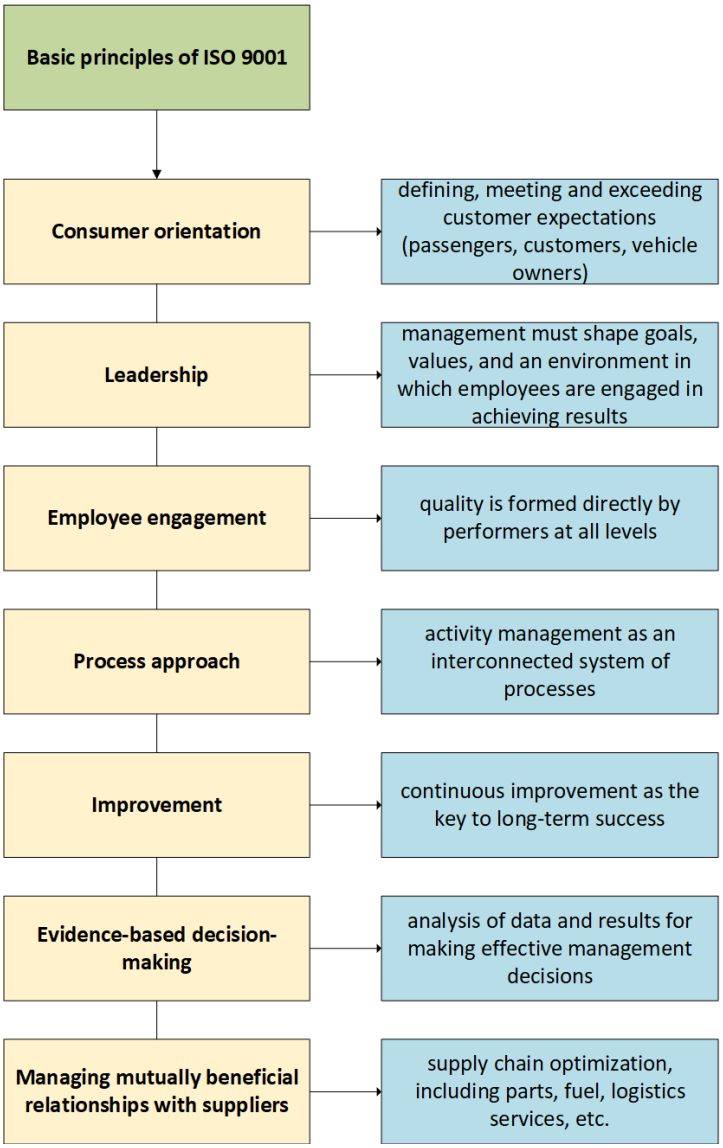

Figure 5.22 – Main principles of ISO 9001 relevant to the automotive sector

1. The Customer Focus principle is a central tenet of ISO 9001. Its essence is that an organization must understand, meet and exceed the expectations of its customers in order to ensure their long-term satisfaction and loyalty.

In the field of road transport, this principle applies to both end users of services (passengers, vehicle owners, freight customers) and internal customers - employees, partners, suppliers.

The essence of the principle, implementation tools, and implementation results are presented in Table 5.21.

Table 5.21 – The essence of the principle, implementation tools, and implementation results

The essence of the principle in the context of ISO 9001	Tools for implementing the principle	Results of implementing the principle
a) Identify customer needs and expectations. b) Translate these needs into product or service requirements. c) Implement processes that ensure consistent satisfaction of these requirements. d) Measure customer satisfaction and use it for improvements. e) Respond to changing customer needs and preferences.	a) Customer satisfaction surveys (questionnaires, online forms, feedback boxes). b) Analysis of complaints and claims as a source for improvement. c) CRM systems (Customer Relationship Management) for recording interactions. d) Personalized customer service and support. e) Informing customers about the status of orders or repairs. f) Training staff in communication standards and service ethics.	a) Increased customer satisfaction and loyalty. b) Improved company reputation. c) More stable revenue through repeat business. d) Reduced claims handling costs. e) New customers through referrals.

The practical implementation of this principle at road transport enterprises is shown in Table 5.22.

Table 5.22 – The practical implementation of this principle at road transport enterprises

Type of business	Manifestation of the principle
Road transport company	Providing safe, comfortable and regular transportation; taking into account passenger feedback.
Service station	Providing clear information about the scope of work and cost, minimizing waiting time, guarantees for work performed.
Car showroom / dealership	Professional consultation, providing test drives, transparent lending, after-sales service.
Logistics center	Adherence to delivery deadlines, accuracy of shipments, flexible logistics solutions.
Gas station / filling station	Fast service, cleanliness, availability of services (cafes, toilets, terminals), availability of fuel.

Customer focus is not just a marketing strategy, but a fundamental element of a quality management system that provides practical value to all other processes of the enterprise. For the road transport industry, which directly depends on the level of consumer trust, this principle is crucial for ensuring sustainable development, competitiveness and innovation.

2. Leadership is the second fundamental principle of the ISO 9001 standard, which defines the role of management in building, maintaining and developing an effective quality management system. Leaders form a common vision, set goals, create a favorable environment for employee involvement and support values that contribute to the achievement of expected results.

For road transport enterprises (service stations, logistics centers, dealer networks, gas stations, etc.), leadership is critically important, since the industry is dynamic, highly competitive and focused on providing services in real time.

The essence of the principle, implementation tools, and implementation results are presented in Table 5.23.

Table 5.23 – The essence of the principle, implementation tools, and implementation results

The essence of the principle in the context of ISO 9001	Tools for implementing the principle	Results of implementing the principle
a) Establishing clear goals, policies and directions for the development of the enterprise. b) Creating conditions in which employees feel responsible, motivated and supported. c) Involving personnel in solving quality improvement tasks. d) Building transparent and open communication at all levels. e) Supporting initiatives and innovations in the field of service and production.	a) Formulation of the organization's mission and vision. b) Regular strategic sessions and planning. c) Internal communications system (meetings, internal newsletters, portals). d) Open leadership by example - participation in daily processes. e) Recognition and incentive system (motivational programs, bonuses, awards). f) Assessment of leadership qualities - feedback from the team. g) Involvement in solving quality problems through team meetings.	a) An environment of trust and team interaction is formed. b) Increased responsibility of personnel for the quality of results. c) Faster adaptation to changes in the market, legislation, technologies. d) Reduced resistance to change when implementing new solutions. e) Increased productivity and employee satisfaction.

The practical implementation of this principle at road transport enterprises is shown in Table 5.24.

Table 5.24 – The practical implementation of this principle at road transport enterprises

Type of business	Manifestation of the principle
Road transport company	The manager actively initiates the implementation of GPS route monitoring to improve efficiency and safety.
Service station	The manager implements an internal training and supervision system for young professionals.
Car dealership	The manager creates a customer-oriented culture by motivating staff to provide quality service.
Gas station	The director initiates equipment modernization, expansion of the range of services and raising service standards.
Logistics center	The management team implements a digital platform for cargo tracking and interaction with customers.

The leadership principle in ISO 9001 is not just about management, but about creating a culture of quality at all levels of the enterprise. For road transport companies, effective leadership allows them to respond quickly to market needs, improve processes, introduce innovations and achieve sustainable development in the face of growing competition.

3. The principle of Engagement of People according to ISO 9001 standard involves the active involvement of all employees in achieving the company's quality objectives. Employees at all levels - from technical personnel to management - are carriers of knowledge, experience and initiatives that must be used to improve the efficiency and effectiveness of processes.

In the road transport industry, which covers a wide range of activities (transportation, maintenance, repair, logistics, trade, refueling, customer service, etc.), the human factor is crucial for ensuring consistent quality of services.

The essence of the principle, implementation tools, and implementation results are presented in Table 5.25.

Table 5.25 – The essence of the principle, implementation tools, and implementation results

The essence of the principle in the context of ISO 9001	Tools for implementing the principle	Results of implementing the principle
a) Every employee must clearly understand their role in quality assurance. b) Employees must be trained, motivated, supported and recognized. c) Creating conditions for staff participation in decision-making and process improvement. d) Encouraging initiative, independence and responsibility.	a) Training and professional development (technical courses, seminars, mentoring). b) Motivation and recognition systems (awards, certificates, internal competitions). c) Personnel evaluation and feedback (annual interviews, questionnaires). d) Information transparency (posting goals, results, news on information stands or portals). e) Quality groups or improvement teams (employee participation in solving production problems). f) System for submitting suggestions (ideas for improving work).	a) Increasing responsibility and interest of staff in the results of work. b) Increasing internal motivation and reducing staff turnover. c) Identifying hidden efficiency reserves through employee ideas. d) Improving the atmosphere in the team, reducing conflicts. e) Improving the quality of customer service through personal involvement.

The practical implementation of this principle at road transport enterprises is shown in Table 5.26.

Table 5.26 – The practical implementation of this principle at road transport enterprises

Type of business	Manifestation of the principle
Service station	Masters participate in the development of maintenance instructions, submit proposals for improving the location of equipment.
Road transport company	Drivers suggest route optimizations, participate in internal surveys on the quality of service.
Gas station / Petrol station	Operators participate in advanced training programs and a service bonus system.
Logistics center	Warehouse workers report on irrational planning of routes or warehouse areas.
Car dealership	Managers independently analyze customer complaints and prepare proposals for improving service.

In today's environment, when technologies are changing rapidly and quality requirements are constantly increasing, human resources are becoming a key asset of any road transport company. Implementing the principle of employee involvement according to ISO 9001 ensures increased efficiency, process flexibility, better adaptation to changes and forms a quality culture in which each employee feels valued and responsible.

4. The Process Approach is one of the key principles of the ISO 9001 standard, which involves managing an organization through a set of interrelated processes. According to this approach, results are achieved more effectively when activities and related resources are viewed and managed as a process.

In road transport enterprises (ATP, service stations, logistics companies, gas stations, car dealerships), the process approach allows you to structure activities, clearly define responsibilities, optimize resources and ensure sustainable service quality.

The essence of the principle, implementation tools, and implementation results are presented in Table 5.27.

Table 5.27 – The essence of the principle, implementation tools, and implementation results

The essence of the principle in the context of ISO 9001	Key elements of the process approach	Advantages of the process approach
a) Identify key processes that affect quality.	1. Input – what is needed to start a process (resources, information,	a) Systematicity and transparency in the work of the

The essence of the principle in the context of ISO 9001	Key elements of the process approach	Advantages of the process approach
b) Establish clear inputs and outputs for each process. c) Assign responsible persons. d) Establish relationships between processes. e) Monitor, measure, analyze, and continuously improve each process.	equipment). 2. Process – a set of actions that transforms input into output. 3. Output – the result of an activity (service, product, document, report). 4. Process owner – a person or unit responsible for managing the process. 5. Performance indicators – criteria by which the effectiveness of the process is assessed. 6. Feedback – an assessment of the results, which allows for improvements.	enterprise. b) Clear responsibility for each area of work. c) Possibility of standardization of operations. d) Ease of detection of errors and bottlenecks. e) Focus on results, not just on the execution of actions. f) Convenience of audit, certification and internal analysis.

An example of a process model for a service station is shown in Figure 5.23.



Figure 5.23 – An example of a process model for a service station

Examples of basic processes in road transport enterprises are given in Table 5.28.

Table 5.28 – Examples of basic processes in road transport enterprises

Type of business	Main processes
Road transport company	Vehicle delivery, passenger or cargo transportation, driver time tracking, maintenance
Service station	Order acceptance, diagnostics, repair, quality control, vehicle issuance
Gas station / Petrol station	Fuel delivery, storage, dosing, customer service
Car showroom / dealership	Car sales, test drive, financing, registration, after-sales service
Logistics center	Order processing, route planning, transportation, warehousing, delivery

The process approach is the foundation for effective management of road transport enterprises. Its implementation allows not only to optimize the structure, resources and interactions, but also to create conditions for continuous quality improvement, cost reduction, increased productivity and customer satisfaction.

5. Improvement is an integral principle of ISO 9001, which involves the continuous improvement of the effectiveness, efficiency and ability of the enterprise to meet customer needs, change with the market and maintain competitiveness. Improvement encompasses both gradual improvements and innovative changes in products, processes and management systems.

In the field of road transport, where rapid technological progress and changes in consumer expectations are taking place, continuous improvement is becoming a guarantee of stability, safety and efficiency of enterprises.

The purpose of the improvement principle is:

–To improve the quality of products and services.
–To increase customer satisfaction.
–To reduce costs and losses.
–To introduce new technologies and solutions.
–To adapt to internal and external changes.

The types of improvement in the context of ISO 9001 are shown in Figure 5.24.

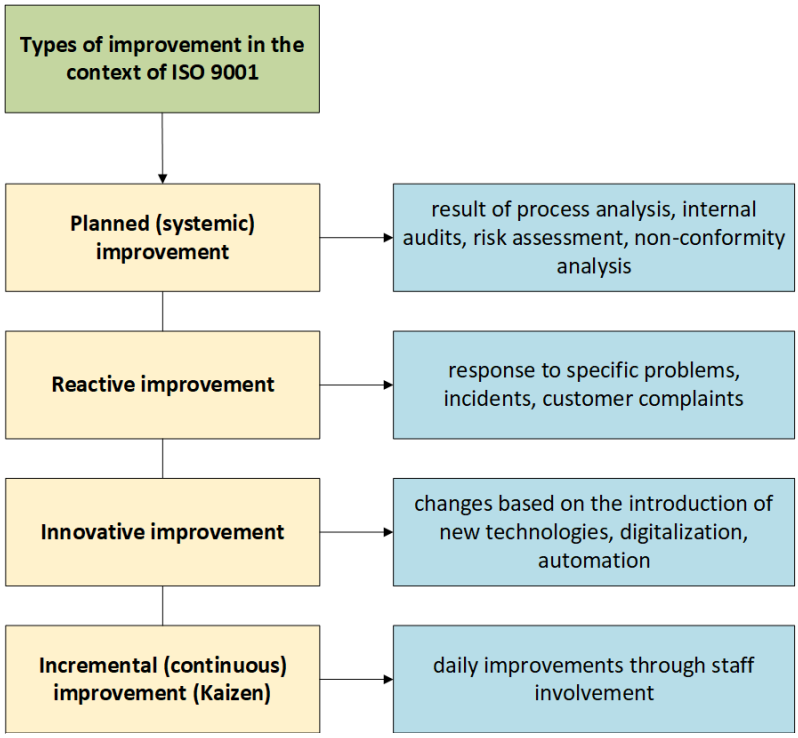

Figure 5.24 – The types of improvement in the context of ISO 9001

Tools for implementing the improvement principle:

–PDCA cycle (Plan-Do-Check-Act) – the basis for continuous process improvement.
–Internal audit – a source of data for improvement.
–Risk and opportunity analysis – finding potential for development.
–Process performance assessment – KPIs, quality indices, costs.
–Feedback collection – customer, employee, partner surveys.
–Staff initiatives – a system for submitting ideas (for example, an “improvement box”).
–CAPA – a system of corrective and preventive actions.

Examples of improvement in road transport enterprises are given in Table 5.29.

Table 5.29 – Examples of improvement in road transport enterprises

Type of business	Example of improvement
Service station	Implementation of a digital database of repairs and customer service history.
Road transport company	Optimization of routes through GPS analytics, which reduces fuel costs.
Gas station / Petrol station	Installation of high-speed charging modules and a mobile application for customers.
Car showroom / dealership	Development of an interactive online booking system and video consultations.
Logistics center	Implementation of a WMS (warehouse management system) for accurate cargo accounting.

An example of the application of the PDCA cycle at a service station is shown in Figure 5.25.

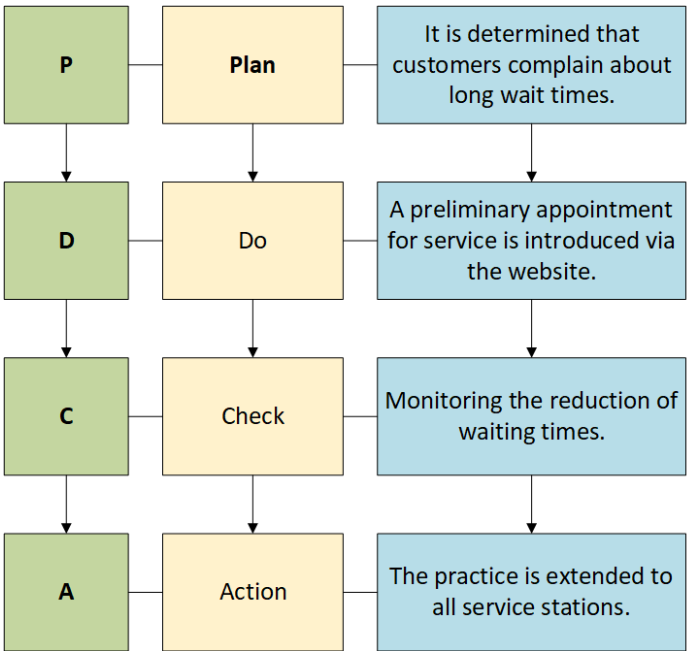

Figure 5.25 – An example of the application of the PDCA cycle at a service station

Improvement is not a one-time action, but an integral part of the company's quality culture. For road transport companies, it is the path to efficiency, flexibility, customer satisfaction and sustainable development. It is the ability to continuously improve that distinguishes market leaders from mediocre participants.

6. Quality management is impossible without informed decisions. The principle of evidence-based decision-making according to ISO 9001 is that all management decisions should be based on the analysis of reliable, current and verified information, and not on assumptions or intuition.

This approach allows road transport enterprises - from trucking companies to service stations, gas stations, dealerships and logistics structures - to reduce risks, use resources efficiently and achieve consistent quality of processes and services.

The essence of the principle, implementation tools, and implementation results are presented in Table 5.30.

Table 5.30 – The essence of the principle, implementation tools, and implementation results

The essence of the principle in the context of ISO 9001	Key elements of the process approach	Advantages of the process approach
a) Using objective data, not subjective judgments. b) Systematic analysis of information before making decisions. c) Relying on facts, measurements, analytics. d) Understanding the impact of decisions on processes, customers and resources.	a) Monitoring of key performance indicators (KPI). b) Trend analysis and detection of deviations (trend analysis). c) Pareto, Ishikawa diagrams, control charts. d) SWOT analysis, FMEA, risk management. e) Reporting and accounting systems (ERP, CRM, WMS). f) Software products for data processing and visualization (Excel, Power BI, etc.).	a) Reducing the level of erroneous or emotional decisions. b) Improving the efficiency of resource allocation. c) Increasing the trust of management and staff in decisions. d) Promoting transparency in management processes. e) Rapid identification of problems and taking corrective actions.

The types of evidence used in road transport enterprises are shown in Figure 5.26.

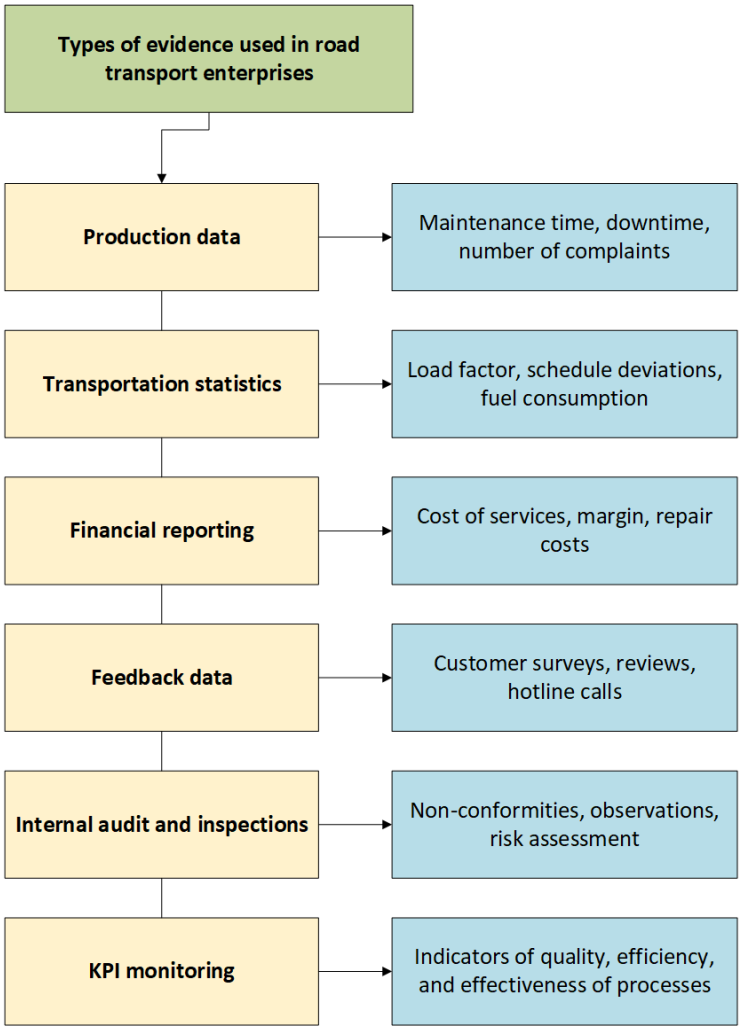

Figure 5.26 – The types of evidence used in road transport enterprises

The practical implementation of this principle at road transport enterprises is shown in Table 5.31.

Table 5.31 – The practical implementation of this principle at road transport enterprises

Situation	Evidence-based solutions
Frequent complaints about poor washing quality	Analysis of the number of complaints, service time, water quality - solution: updating equipment and maintenance regulations
Decrease in flight profitability	Analysis of logistics routes, fuel consumption, downtime - solution: optimizing the route network
Increase in complaints after maintenance	Checklists, diagnostic results, personnel errors - solution: advanced training and double control
Situation	Evidence-based solutions
Frequent complaints about poor washing quality	Analysis of the number of complaints, service time, water quality - solution: updating equipment and maintenance regulations

Evidence-based decision-making is the foundation for sound quality management. In the complex production and service environments of motor transport companies, this principle helps reduce risk, increase efficiency, and ensure continuous improvement. Managers who are guided by facts, not intuition, create systems that are capable of predicting, controlling, and evolving.

7. The principle of managing mutually beneficial relationships involves creating stable partnerships with suppliers, contractors and other stakeholders, since the successful operation of an organization largely depends on the quality and reliability of its supplies.

In the field of road transport (ATP, service stations, car dealerships, logistics centers, gas stations, etc.), effective cooperation with suppliers of spare parts, materials, equipment, fuel, IT services or logistics

services has a direct impact on the quality of the final service, competitiveness and financial stability of the enterprise.

The essence of the principle, implementation tools, and implementation results are presented in Table 5.32.

Table 5.32 – The essence of the principle, implementation tools, and implementation results

The essence of the principle in the context of ISO 9001	Tools for implementing the principle	Results of implementing the principle
a) Establishing long-term partnerships. b) Mutual trust, transparency and information exchange. c) Shared responsibility for the result. d) Taking into account the interests of both parties when making decisions. e) Mutual improvement of processes, innovations and efficiency.	a) Supplier assessment and audit (compliance with standards, availability of ISO certificates, environmental aspects). b) Drafting contracts with clear KPIs, SLA (Service Level Agreement), liability conditions. c) Regular meetings, joint planning, risk analysis. d) Using CRM/ERP systems to manage relationships. e) Monitoring the effectiveness of partnerships (analysis of delivery timeliness, percentage of complaints, price-quality). f) Long-term development programs with key suppliers (joint investments, R&D projects, etc.).	a) Stability and reliability of supplies of goods and services. b) Reduction of costs and logistical losses due to better coordination. c) Access to innovative solutions and technologies from partners. d) Improvement of the quality of products and services due to transparency of the supply chain. e) Flexibility and adaptability to changes in the market or legislation. f) Reduction of risks of interruptions in the supply chain. g) Attracting new customers through the reputation of a stable and responsible enterprise.

The practical implementation of this principle at road transport enterprises is shown in Table 5.33.

Table 5.33 – The practical implementation of this principle at road transport enterprises

Type of business	Examples of mutually beneficial cooperation
Service station	Regular deliveries of certified spare parts with deferred payment, joint training of technical personnel
Road transport company	Contract with an oil trader for fuel supply at fixed prices, telemetry support from a GPS system supplier
Gas station	Cooperation with electricity suppliers on flexible tariffs, participation in government programs
Car dealership	Cooperation with leasing companies and banks that offer favorable terms to customers
Logistics center	Data exchange with counterparties via API, integration into a single digital cargo monitoring system

Managing mutually beneficial supplier relationships is a strategic activity that goes beyond procurement. It is a system of trust, exchange and joint development that provides road transport companies with reliability, efficiency and competitive advantages in a dynamic market. It is thanks to partnership that it is possible not only to ensure high-quality activities today, but also to build sustainable development in the future.

Examples of the practical application of ISO 9001 in road transport enterprises are given in Table 5.34.

Table 5.34 – Examples of the practical application of ISO 9001 in road transport enterprises

Type of business	Implementation of QMS ISO 9001
Road transport company	Control of technical condition of vehicles, transportation quality, safety, maintenance schedules

Service station	Adherence to repair technology, registration of operations, order management, customer satisfaction
Logistics center	Supply management, timeliness, cargo safety, warehouse optimization
Gas station	Fuel quality control, dosing accuracy, safe operation of equipment
Car showroom or dealership	Sales transparency, quality of communication with customers, after-sales service

Key elements of the ISO 9001 system:

–Quality policy and objectives;
–Identification of key processes and their relationships;
–Document management (instructions, standards, checklists);
–Process and product audits;
–Risk and opportunity assessment;
–CAPA - corrective and preventive actions;
–Monitoring, analysis, improvement.

Benefits of implementing ISO 9001 for motor transport companies:

–Increasing the trust of customers and partners;
–Reducing the number of claims and complaints;
–Improving internal organization and discipline;
–Ensuring compliance with legislative requirements;
–Increasing the efficiency of resource use;
–Preparing for certification and participation in international projects.

A quality management system in accordance with ISO 9001 is not just a standard, but a strategic management tool that allows road transport enterprises to consistently achieve high quality services, minimize risks, improve operations, and ensure sustainable growth in a competitive environment.

The implementation of a quality management system in accordance with the requirements of the ISO 9001 standard at road transport enterprises is not just a formal certification procedure, but a strategic development tool that covers all levels of the organization - from performers to top management. Such a system allows you to ensure stability, predictability and continuous improvement of production and service processes.

The key difference between ISO 9001 is the integration of quality principles into daily activities, and not only in the sphere of control. This changes the approach to management: instead of reacting to problems, the enterprise forms a proactive culture of prevention, built on facts, feedback, risk analysis and interaction.

For enterprises in the industry operating in conditions of high competition, technological changes and growing consumer expectations, ISO 9001 acts as a basic framework that ensures consistency of processes, increased customer trust, transparency of management and readiness for adaptation.

Thus, quality in the modern sense is not only a characteristic of a service or product, but an organizational ability to provide stable value in a dynamic environment, which confirms the strategic importance of the ISO 9001 system for road transport enterprises.

5.5 Management of activities in the field of road transport

5.5.1 Road transport as a production, socio-economic, information system

Road transport, as a system, can be considered in three aspects: technical and technological, socio-economic, cybernetic (information).

Considering road transport from a technical and technological perspective, it should be noted that the transport process is based on a material and technical basis and on the interaction of individual technical elements. The technological process involves a large number of material resources, the quantity and quality of which are constantly changing and improving. The dynamic nature of technical and technological changes imposes a certain responsibility for building a work management system in the field of road transport, ensuring its efficiency.

The socio-economic aspect of the functioning of the transport system considers work in the field of road transport from the standpoint of participation in the work of a large number of people, division of labor between these people, grouping, uniting people into separate transport units, directing their activities to achieve a certain goal. The results of the work are determined by the technical and technological state of the transport system. People enter into social and production relations with each other, the complexity of which is determined by the interaction of people directly involved in the transport process on the one hand, with people involved in managing this process on the other hand. The nature of social and production relations depends on the forms of ownership and the participation of people in the production of enterprises of different forms of ownership. The existence of different forms of ownership fundamentally affects the formation of production relations, the formation of general, group, private interests, determines the role, place and participation of people in production.

The activities of road transport enterprises in market conditions, in conditions of competition, economic rivalry impose certain requirements on the management of the functioning processes. Competition in the transport services market exists as an objective process, as a struggle for the appropriation of the largest profits. In market conditions, a large number of independent carriers have appeared, who have rushed into the struggle, with a desire to seize and expand the sphere of their influence. Competition acts as an external coercive force to increase labor productivity, increase the volume of transport work, use new types of vehicles, and introduce more advanced technological processes.

Competition in the transport services market is characterized by positive and negative signs. Positive signs of competition include:

- competition covers all economic relations of transport enterprises with enterprises-customers for the transportation of passengers and goods and with the population. As a result, demand for transportation and the desire to satisfy existing demand are revealed;
- a process of cooperation is carried out between passenger and cargo carriers, their interaction is established, and the transport services market is divided between carriers;
- competition forces carriers to improve economic work at the enterprise, to implement measures aimed at reducing individual production costs, to direct their activities to reduce costs for fuel and lubricants, repair and maintenance operations, to save working time;
- competition forms the level of market tariffs for the performance of transport work, determines a balanced relationship between the needs for transport services and their satisfaction.

The negative signs of competition include the difficulties of survival of carriers - especially small business structures, leading them to bankruptcy; increasing social injustice, aggravating unemployment, creating the prerequisites for inflation, etc.

Despite this, as practical experience shows, continuous changes, updates, development are a characteristic feature of the socio-economic transport system. The mechanisms of a market economy, in the presence of regulatory state influence, have a positive effect on the development of road transport, on meeting the needs of society, which is the final result of activity.

The cybernetic view of road transport is due to the fact that the management process is always an information process. With this approach, the transport process is considered as a system associated with information, which is used to implement a large number of management functions, the implementation of management decisions.

Thus, each road transport enterprise and road transport as a whole should be considered as a system in which technical and technological, socio-economic and informational unity is reflected. This system as a direction of economic activity is characterized by complexity and extreme complexity.

5.5.2 Basic (general) and specific (specific) management functions

The basic (general) management functions include planning, organization, coordination (dispatching), activation (motivation, stimulation), control.

The basic functions are manifested in any management and are mandatory for implementation. If any function is not performed, the management process is weakened or disrupted altogether.

The concept of "organization" is used in two meanings. The organization is understood as the composition of the management system, the mutual relations between the managed and managing subsystems. The organization reflects what components the managed and managing subsystems are formed from, what mutual relations exist, and information flows between units.

Planning, as a management function, includes the development of the trajectory of the socio-economic system, the forecast and development plan of a particular organization. The management apparatus, implementing the planning function, justifies the ultimate goal of its work, as well as the ways to achieve this goal. Without planning, without preliminary justification of the ways of development of entrepreneurial activity, it is impossible to build a management system, it is impossible to organize the work of the enterprise team.

Planning is carried out not only by the enterprise apparatus. Each participant in the production process, performing individual tasks, also performs the planning function, justifies possible options for his participation in production activity, links his interests with the interests of the enterprise.

Coordination consists in implementing operational intervention in the production management process, ensuring coordination in the actions of individual participants in the production process. When performing the coordination function, the directions of the socio-economic development of the enterprise are analyzed, the actions of individual participants in production are coordinated in the presence of deviations from the adopted plan, additional solutions are developed and implemented, production reserves are used, and a positive final result is achieved.

Activation (motivation, stimulation) includes the choice of methods of stimulating participants in the production process that would ensure the effective solution of the necessary tasks. Activation must be understood in a broad sense. This is not only material stimulation. In practice, moral methods of stimulation are used, providing benefits to participants in production.

Control consists in ensuring a systematic check of the state of production activity. During control, the fulfillment of planned indicators is checked, the reasons that negatively affect the fulfillment of tasks are identified. Control is based on accounting and analysis. The accounting system should clearly and promptly reflect the state of production, enable managers to choose the optimal ways of developing entrepreneurial activity and achieve the best results. Not only the results of the enterprise's activities are subject to analysis, but also the actions of individual employees. Control helps to identify deviations of actual work results from planned ones and bring production and work of individual employees into the appropriate mode.

The composition of specific (specific) management functions is determined by the content of a specific production and economic activity. Road transport enterprises perform specific tasks for the transportation of passengers and cargo. The nature of production activity determines the composition and content of specific management functions.

The specific functions of managing a motor transport enterprise include:

- general line management, the implementation of direct managerial influence of the manager on the collective of employees of the enterprise;
- management of the work of the rolling stock of a motor transport enterprise;
- management of strategic development of the enterprise;
- management of commercial work based on the conduct and implementation of marketing research results;
- management of transport and forwarding activities;
- management of the quality of transport services in the transportation of goods;
- management of the quality of passenger service in their transport service;
- operational management of the transport process (dispatching);
- management of technical support and maintenance of vehicles;
- management of traffic safety;
- management of labor and the process of remuneration of labor;
- management of personnel, their training and advanced training;
- management of material and technical support;

- management of economic work, financial and credit activities, mutual relations with banks;
- management of accounting and control;
- management of capital construction, repair work;
- management of social development of the team;
- management of information support for the work of a motor transport enterprise;
- management of document flow at the enterprise;
- management of protection of legal interests of the enterprise and its employees;
- management of activities related to mutual relations with state bodies of local government, local self-government bodies.

The content of the industry-specific features of specific management functions inherent in road transport largely determines the structure of the enterprise's management, the composition of employees performing a particular function. Each enterprise should have regulations on departments, job descriptions of employees, which define their rights and responsibilities. In all cases, the responsibility of each division of the management apparatus, each employee for the performance of production tasks, improving the image of the motor transport enterprise in the automotive services market should be clearly regulated.

5.5.3 Problems and scientific principles of the formation of production management structures

Any modern enterprise (firm, organization) has a structural hierarchy, which includes various structural units that interact with each other in a certain way.

The units are divided into production and non-production. Production units include workshops, sections, zones that implement the processes of main, auxiliary or service production. The set of such units is the production structure of the enterprise.

Non-production units include structural units of the management apparatus: services, departments, groups, laboratories.

The organizational structure of the enterprise management is a set of structural units of the management apparatus (services and departments), interconnected in a certain way for the implementation of general management functions (planning, organization, coordination, motivation, control) and other specific management functions:

- management of labor and production quality;
- management of competitiveness, etc. [1, 5].

The above grouping of structural divisions of the enterprise (organizations, forms) reflects the ideas formed in domestic practice about the correlation of various structural units within enterprises (organizations, firms). There are no regulatory documents that would establish these correlations on a national scale.

The most important place in the development of the theory and practice of management is occupied by the analysis of trends in the development and evolution of management structures. It should be noted that the higher the level of development of equipment, technology and organization of production, the higher the level of management of a modern enterprise.

The relevance of the issues considered is as follows:

- theoretical aspect - today in Ukraine there are no modern scientific and methodological developments and practical recommendations on the formation of rational management structures that take into account the work of enterprises of a particular industry.

- practical aspect - the efficiency of management structures at many enterprises is reduced as a result of:

- the presence of an excessive number of managers, specialists and employees;
- the absence of clear schemes for organizing document flow at enterprises;
- low level of technological equipment of workplaces of management personnel, which leads to a low level of automation of processing of technical, technological and economic information at the enterprise;
- lack of effective systems of motivation (interest) of employees of the management apparatus to achieve high final results of the work of the entire enterprise or its main structural divisions.

The purpose of studying this issue is to form theoretical knowledge, as well as practical skills and abilities in the formation of a rational structure of production management, the distribution of management functions and the number of personnel by services and departments of the management apparatus.

The organizational structure of management of any enterprise or firm should be considered from the standpoint of a systems approach as a set of the following elements (subsystems):

- organizational component (studies the tasks and relationship between the divisions of the management apparatus, new types of organizational structures of production management are developed);

- personnel support (the issues of the actual staffing of the personnel management apparatus, placement and advanced training of personnel, etc. are analyzed);

- technical support - a set of issues reflecting the level of provision of services, departments and individual workplaces of management personnel with computers, office equipment, communications, etc. is considered);

- information support - issues related to the organization of document flow of the enterprise (internal and external) are studied, issues of acquiring new modern computer programs are studied, due to which the level of automation of information processing at the enterprise is increased.

Let us single out the organizational component from this variety of aspects of the construction and functioning of management structures of modern enterprises, and first of all - consider the basic principles of forming rational production management structures. Among the scientific principles of their development, it is necessary to highlight:

- a combination of scientific and creative approaches.
- hierarchical construction.
- single-headedness of the manager.
- delegation of authority.
- purposefulness (orientation) on achieving high final goals and results.
- ensuring good manageability of the object and resistance to environmental factors.
– a high level of efficiency in the functioning of the enterprise management system.

Management of activities in the field of road transport is a complex and multidimensional process that encompasses technical, economic, social and informational components. Road transport functions not only as a production system, but also as an important part of the socio-economic infrastructure that actively responds to external challenges, in particular market competition, technological changes, the needs of society and customers.

Road transport enterprises have a specific management, which is based on general management functions (planning, organization, coordination, motivation, control) and specific tasks related to transportation, technical support, traffic safety, economic efficiency, passenger and customer service.

Rational construction of the organizational structure of management is a critically important condition for the effective functioning of road transport enterprises. It should be based on the principles of scientificity, hierarchy, delegation of authority, orientation towards achieving final results and high adaptability to changes in the external environment.

It is important to understand that effective management in the conditions of the modern transport market is impossible without digitalization of processes, personnel development, modernization of the technical base and implementation of the latest management approaches, in particular – systemic, process and risk-oriented.

Successful management in the field of road transport requires a combination of classical management principles with flexibility, innovation and strategic vision, which allows enterprises not only to survive, but also to develop in conditions of constant change.

5.6 Intelligent Transportation Systems role in supporting the development of smart city

An Intelligent Transport System (ITS) purpose is to optimize transportation planning, improve traffic management, demand management by creating an interconnected network of people, routes and vehicles [1].

ITS goals

The implementation of ITS brings wide array of benefits that significantly impact various aspects of urban life and transportation [1]:

- Improved Safety: Advanced warning systems and real-time traffic information help reduce accidents. Intelligent traffic signals and pedestrian detection systems enhance road safety for all users. Emergency vehicle pre-emption systems facilitate faster response times.
- Reduced Congestion: Dynamic traffic light coordination optimizes traffic flow. Real-time route guidance helps drivers avoid congested areas. Incident management systems quickly detect and respond to traffic disruptions.
- Increased and Higher Quality Mobility: Multimodal transportation integration improves overall accessibility. Real-time public transport information enhances service reliability. Demand-responsive transport systems cater to diverse mobility needs.
- Reduced Environmental Impact: Smoother traffic flow leads to decreased vehicle emissions. Promotion of public and shared transportation reduces the number of vehicles on the road. Support for electric and low-emission vehicles through smart charging infrastructure.
- Improved Energy Efficiency: Optimized traffic flow reduces fuel consumption. Eco-driving support systems encourage more efficient driving behaviors. Smart parking systems reduce time spent searching for parking spaces.
- Enhanced Economic Productivity: Reduced congestion and travel times increase workforce productivity. Improved logistics and freight management enhance supply chain efficiency. Creation of new business opportunities in the ITS sector stimulates economic growth.

The basic structure of ITS consists of five components: sensing, positioning, mapping, communication and networking

The fundamental structure of ITS includes five core components: sensing, positioning, mapping, communication, networking. Additionally Human-Machine Interaction (HMI) plays a crucial role in the effective implementation of these systems [2].

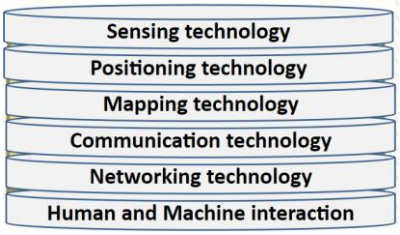

Figure 5.6.1. The basic structure of ITS.

- Sensing Technology. Sensing technology is responsible for collecting information on external circumstances (cameras installed on moving vehicles, sensors integrated into road infrastructure).
- Positioning Technology. Positioning technology is used to identify the location of moving objects within the transport system, for example Global Positioning System (GPS) and Galileo system.
- Mapping Technology. Mapping technology is essential for plotting the location of objects on a map and displaying this information in a user-friendly format.
- Communication Technology. Communication technology enables the linking of moving objects to the central control system.
- Networking Technology. Networking technology allowing for the integration and coordination of all other components.

- Human-Machine Interaction (HMI). It focuses on improving the interaction between the driver and the vehicle control system and providing real-time information about current road situations

ITS application

ITS have a wide range of applications across various aspects of transportation. Here are some examples:

- Traveller Information Services. These services provide valuable information to travellers for journey planning and adaptation based on real-time situations. They enhance comfort, efficiency, safety and reduce environmental impact [3].
- Electronic Pricing and Payment. As congestion and pollution increase, electronic pricing systems offer flexible charging for road usage, influencing transport choices and supporting targeted infrastructure policies [4].
- Freight and Logistics. ITS contributes to co-modality by improving infrastructure, traffic and fleet management and facilitating better tracking of goods across transport networks. Main application areas [5]:
  - E-freight transport environment
  - Freight Transport Management applications
  - Fleet management for optimizing vehicle utilization and scheduling
  - Management of special categories like dangerous goods
  - Terminal management (access control, loading bay and parking zone management)
- Vehicle Safety Systems. These systems aim to reduce road accidents, major cause of death in industrial countries by supporting drivers in maintaining safe driving practices. Examples of advanced driver assistance systems:
  - Speed adaptation
  - Post-crash warning
  - Collision Avoidance Systems
  - Intelligent Speed Adaptation
  - Night vision enhancement
  - Road Intersection safety systems

These application areas demonstrate the potential of ITS in addressing various challenges in modern transportation systems; from improving individual travel experiences to enhancing overall road safety and logistics efficiency.

5.7 Transportation demand models and its characteristics

The transport demand model simulates individual behavior during travel, facilitating the movement of people from one point to another while engaging in various activities using specific transport infrastructure, with the aim of forecasting future transport demand and conducting feasibility studies for investments. Transport demand models can take various forms and types. For example, there are models that represent multiple interrelated aspects of regional travel behavior, determining how individuals are involved, where and how transport activities occur and how individuals reach these activities. Other models are more limited and address more focused transport tasks, such as freight-related travel, analyzing individual transport corridors and street intersections [6]. The type of transport demand model primarily depends on the specific objectives of the traffic flow impact analysis task. The first transport demand models were developed in the 1950s when a rapid increase in personal vehicle numbers was observed in the USA. When transport planning policy development became a priority in the 1970s, the first trip-based transport behavior demand models were developed and applied [7]. Transport demand models are classified as [8]:

- Aggregate demand model - demand is determined based on average travel group indicators, for example, for a public transport demand model, this could be the number of residential and commercial buildings, average transport costs, alternative travel mode costs.
- Disaggregate demand or Behavior model - demand determination is based on observations at the traveler-individual level, household, or company. Behavioral demand models consider each observed choice, not just aggregated data.

Transport aggregate and behavioral demand models are mostly trip-based models with the modeling unit being a "trip", but they can also be tour-based, with the modeling unit being a "tour" or "trip chain". Transport demand models have evolved over time in two directions [8]:

- From the typical "4-step" transport demand model to a detailed tour-based and activity-based transport demand model.
- New generation integrated land-use transport models are disaggregated and use activity-based approaches.

Trip-based Travel Demand Model

The trip-based travel demand model uses an individual's transport trip as the unit of analysis. Trip-based travel demand models are widely used in practice for traffic flow impact analysis, as they help provide transport system solutions and decision-making at regional, city, and project levels (analysis of individual intersections, street sections). In a trip-based transport demand model, the transport demand modeling process is trip-based with limited analysis of individual travel behavior. Trip generation is mostly analyzed using household-level cross-classification methods, based on large-scale socioeconomic surveys for all transport analysis zones, divided by travel purposes. Linear regression models are used to determine trip destinations at the zone level. A typical trip-based transport demand model includes the following mandatory steps: determining the number of generated transport trips for a specific time period, determining the trip route, mode choice for each trip, and trip assignment (Generation, Distribution, Mode choice, and Assignment), using historical data, see Fig. 5.7.2. The first three steps relate to "travel demand," while the trip assignment step relates to "travel supply" [8].

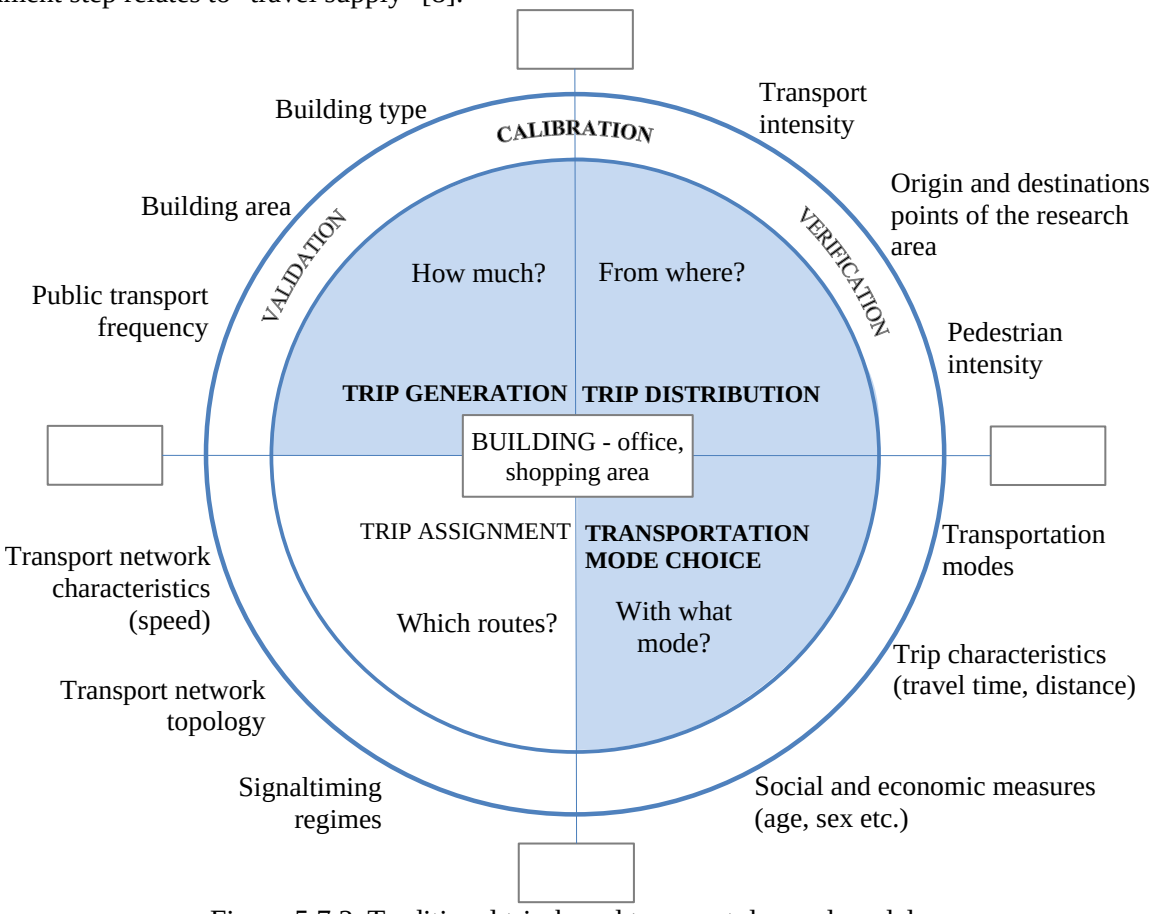

Figure 5.7.2. Traditional trip-based transport demand model

The drawbacks of the trip-based transport demand model are related to the model's tendency to focus on aggregate behavior rather than individual traveler behavior, and its inability to evaluate combined transport modes. As a result, this leads to an artificial limitation of individual choice, and when calculating transport flow forecasts, the reasons why the traveler chose a particular route are not taken into account [9].

Travel-based transport travel demand

The tour-based travel demand model builds on the typical trip-based transport demand model and focuses on specific aspects, dividing individual travel into separate tours, for example, "home - work - home". Tour-based transport demand models are mostly implemented on a national scale, such as the Dutch [10], Swedish [11], and Danish [12] transport demand models.

An example of a tour-based transport demand model is shown in Fig. 5.7.3. The Ørestad Traffic Model (hereinafter - Ørestad model) was developed to predict the expected impact of the metro on traffic and improve quality parameter calculations in choosing the type of transport demand model [13].

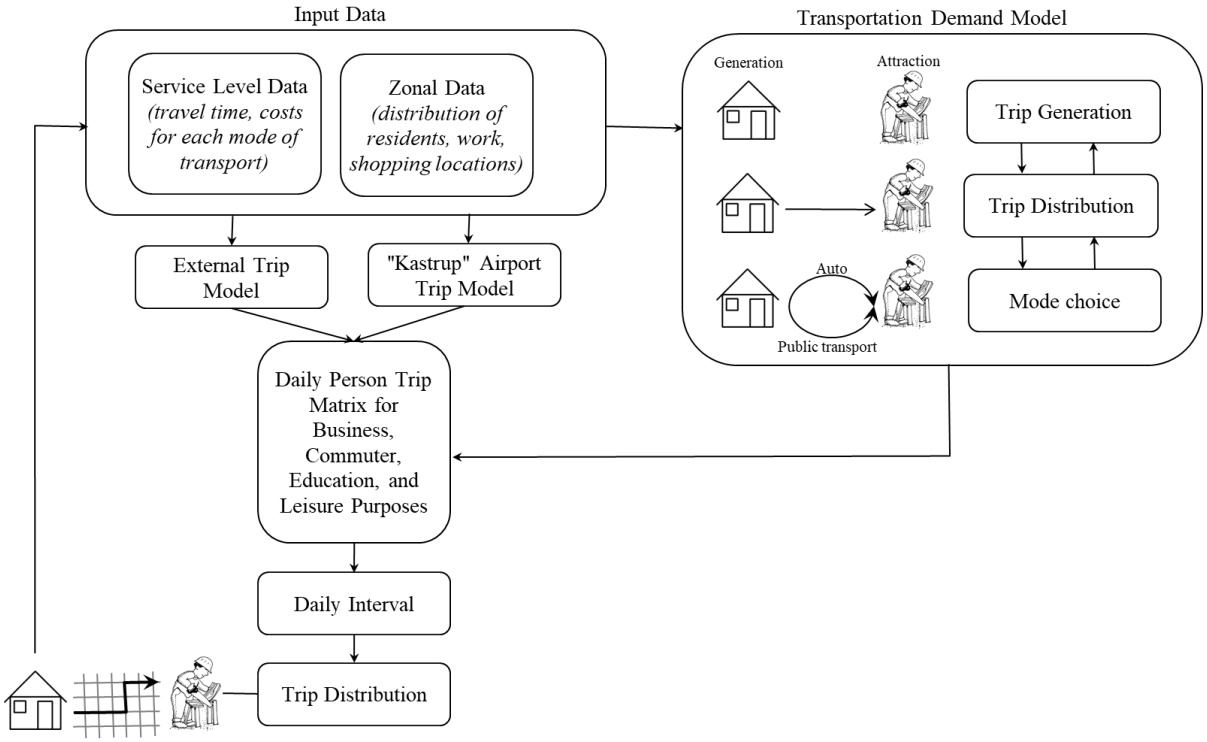

Figure 5.7.3. Ørestad tour-based transport demand model (adapted from [13])]

The Ørestad model is based on revealed preference and stated preference data. The model's input data includes zonal and service level data. Zonal data characterizes population distribution; work, shopping, study locations; parking costs. Service level data contains information about travel costs for each mode of transport (private and public transport). Characteristics of the Ørestad model [13]:

- The model contains demand and assignment models for passenger and freight transport.
- Designed for short-term forecasting.
- The Ørestad transport demand model contains trip generation, trip distribution, and mode choice, where trip generation and trip distribution are "tour-based". The business segment of the model is trip-based, while commuter, education, and leisure segments are "tour-based".
- The split between the four segments is based on the assumption that travelers in these segments have significantly different travel times.
- Separate models are created for background traffic and Copenhagen Airport.
- Trip distribution depends on trip generation, while mode choice depends on trip distribution. In the opposite direction, the steps of the Ørestad transport demand model are connected by an accessibility indicator.

All tour-based transport demand models, including the examined Ørestad transport demand model, have common characteristics [13]:

- Reliance on decision tree formalism.
- Simplification of travel tour definition.
- Assumption of the main "mode of transport use".
- Calibration divided by purposes. Each individual trip is calibrated separately.

The common characteristics of tour-based transport demand models are also their limitations, as they do not consider the connection between trips. For example, if a person travels to work and drops off a child at school before work, such trips could be considered as two independent trips, one related to work and the other to "other" activity, or not considered at all. Secondly, tour-based transport demand models do not evaluate the interaction between households and travels. But the main drawback of the models is that tour-based transport demand models do not represent travelers' trip behavior [14].

Comparing tour-based and trip-based transport demand models for various scenarios at regional and project levels, it was found that tour-based transport demand models can provide more accurate results for regional-level tasks, with exceptions regarding the level of motorization, work flow and start of work time distribution, and average travel time for work trips. On the other hand, trip-based transport demand models provide more acceptable results in forecasting transport flows for project-level traffic flow impact analysis tasks [15].

Activity-based transport travel demand

Activity-based transport demand model is similar to the typical trip-based transport demand model - generated activities, identified destinations for these activities, determined transport modes, and defined specific routes for the chosen transport modes. However, compared to the typical trip-based transport demand model, activity-based transport demand models include some significant advantages [80]:

- Clear representation of time and space constraints, links between activities and travel trips for an individual, as well as for multiple persons in a household.
- The ability to include detailed person-level and household-level attribute effects. This is possible because travel-based transport demand models work at the level of individual behavior.

Activity-based transport demand models predict travel behavior as a derivative of activities. Activities can be grouped in various ways, for example, work, shopping, recreation, education, etc. The decision to engage in activities represents a complex interaction [16]:

- Household and individual roles and responsibilities.
- Lifestyle determined by the individual and their family.
- Types of activities, location, and duration.
- Time, space, and budget constraints.

An example of an activity-based transport demand model is the Copenhagen Model for Passenger Activity Scheduling (COMPAS; see Fig. 5.7.4.).

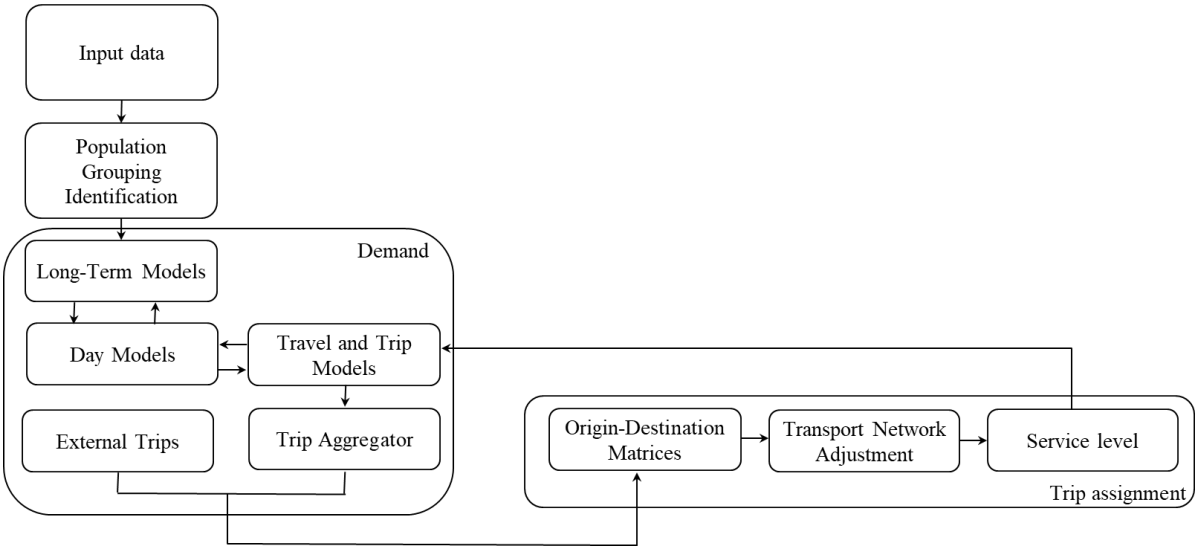

Figure 5.7.4. the Copenhagen Model for Passenger Activity Scheduling (adapted from [17])

The model's individual activity planning occurs at four levels: population group determination, long-term models, daily models, and travel and trip models. At the first level, mobility and lifestyle modeling takes place, which includes a car owner behavior model and a work destination model. At the second level, the activity structure is modeled. At the third level, tour modeling occurs, where three outcomes are modeled

for each work, school, and leisure tour: time of day, destination, and transport mode. At the fourth level, trip modeling occurs, which is important in cases where additional stops are necessary when traveling to the destination [17].

The main advantage of the activity-based transport demand model compared to other transport demand models is that the activity-based approach to transport demand modeling provides an accurate framework in which travel is analyzed as a daily behavior pattern and is associated with individual differences in lifestyle and participation in activities among individuals. Activity-based transport demand models have an improved ability to model non-work-related, off-peak hour travels, involving complex interactions between household members, activity and trip time goals [16].

Main characteristics of the transport travel demand mode

Despite all the advantages of activity-based transport demand models, these models are not widely used in practice [18]. For example, in the USA, 99% of Metropolitan Planning Organization members use trip-based transport demand models; there are cases where activity-based transport demand models have been developed but are not practically used, or when the development of an activity-based model takes several years and is still not completed. This is related to the fact that the total development costs of activity-based transport demand models several times (4:1) exceed the costs of trip-based transport demand models.

The software application cost ratio between activity-based and trip-based transport demand models is even higher than the development costs, as the required computation time for an "average" result in an activity-based transport demand model could be about two weeks. This leads to activity-based transport demand models not being cost-effective. Another drawback of activity-based transport demand models is their complex transferability. Thus, activity-based transport demand models can provide advantageous results only if the models are adapted to other territories where detailed survey data with a significant dataset size is available; otherwise, it is better to use typical transport demand models with extensions [19, 20, 21, 22]. Different types of trips and tours for various transport demand models are shown in Fig. 5.7.5.

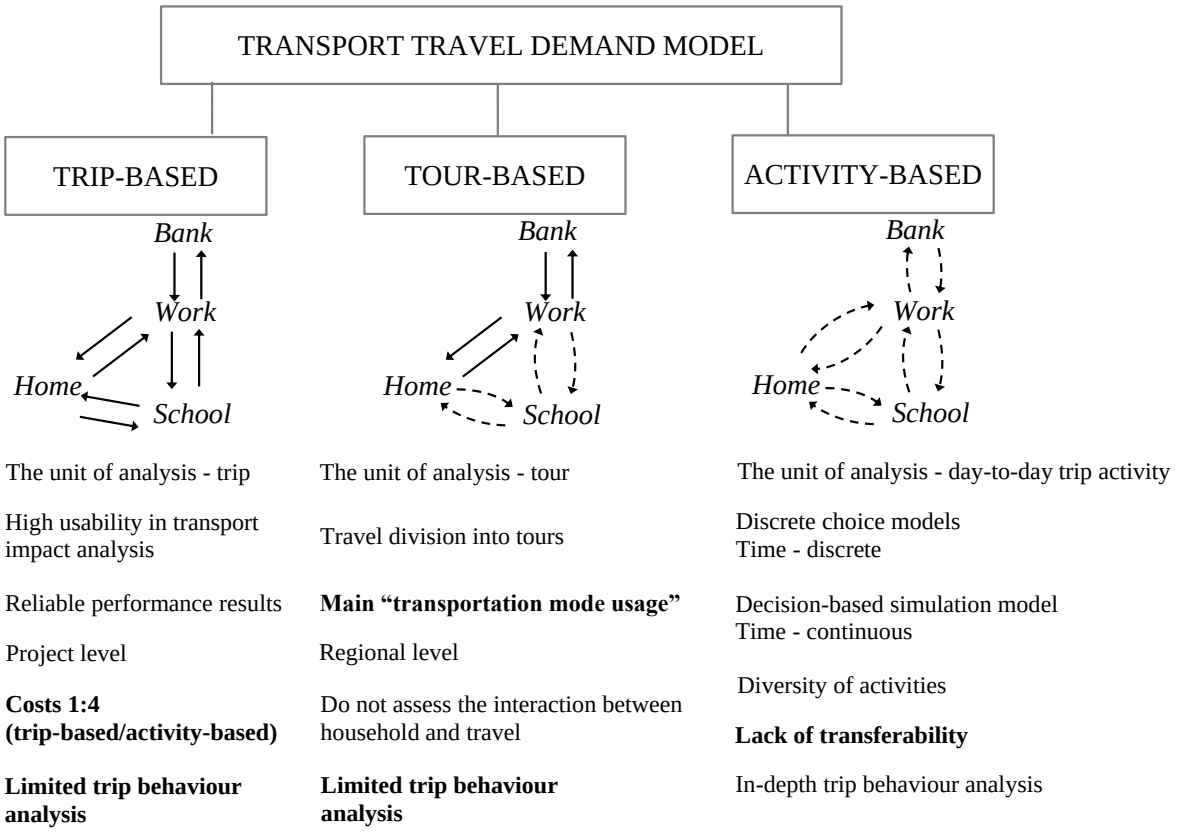

Figure 5.7.5. Main characteristics of the transport travel demand model

Literature

1.Gracias, J.S.; Parnell, G.; Specking, E.; Pohl, E.A.; Buchanan, R. Smart Cities—A Structured Literature Review. *Smart Cities* **2023**, *6*, 1719-1743. DOI:10.3390/smartcities6040080.

2.Japan Society of Civil Engineers (JSCE); The Asian Civil Engineering Coordinating Council(ACECC). Intelligent Transport Systems (ITS) Introduction Guide. Version 1.1. 2016.

3.Tavares, T.; Procee, R.; Wion, A.; Neirynck, R.; Hortal F.F.; Bergant, N.; Pesce, M.; Porsch, L. Directorate-General for Mobility and Transport (European Commission). Supporting study on activities 3.2, 3.3 and 3.4 of the new working programme of the its directive. Final report nr. MOVE/B4/2019-268. Publications Office of the European Union, 2021. DOI: 10.2832/35467.

4.Electronic Pricing and Payment. Available online: https://transport.ec.europa.eu/transport-themes/intelligent-transport-systems/road/application-areas/electronic-pricing-and-payment_en (accessed on 15 February 2020).

5.Giannopoulos, G.A.; Mitsakis, E.; Salanova, J.M. Overview of Intelligent Transport Systems (ITS) developments in and across transport modes. *JRC Scientific and Policy Reports* **2012**, 4-33.

6.Ben-Akiva M. Travel Demand Modeling, Demand & Economics. Transportation Systems Analysis. MIT OpenCourseWare / Internets. – https://ocw.mit.edu/index.htm – Resurss apskatīts 2016. gada 12. decembrī.

7.Quinlan J. R. C4.5: Programs for Machine Learning. – Morgan Kaufmann Publishers Inc., 1993. – p. 299.

8.Nelson \ Nygaard. Adjusting Site-Level Vehicle Trip Generation Using URBEMIS, San Francisko: Nelson\Nygaard Consulting Associates. – 2005.

9.103 Punzo V., Ciuffo B. How Parameters of Microscopic Traffic Flow Models Relate to Traffic Dynamics in Simulation// Journal of the Transportation Research Board. – 2009. – Vol. 2124. – pp. 249.–256.

10.Fratar T. J., Voorhees A. M., Raff M. S. Forecasting distribution of interzonal vehicular trips by successive approximations/with discussion// Highway Research Board. – Washington: Transportation Research board. – 2008. – pp. 53.–65.

11.Algers S., Daly A., Widlert S. Modelling travel behaviour to support policy making in Stockholm. P. Stopher and M. Lee-Gosselin. – 1997.

12.Fawcett T. An introduction to ROC analysis// Pattern Recognition Letters. – 2006. – Vol. 27. – pp. 861.–874.

13.ITE. Trip Generation Handbook, 2nd ed. – An ITE Recommended Practice, 2004. – p. 162.

14.Meyer M. D., Miller E. J. Urban Transportation Planning 2nd Edition. – Boston: McGraw-Hill, 2001 – p. 656.

15.EzellS. Explaining International IT Application Leadership: Intelligent Transportation Systems. The Information Technology & Innovation Foundation. – 2010.

16.Ma J., Kockelman K. M. Crash Modeling Using Clustered Data from Washington State: Prediction of Optimal Speed Limits// IEEE Intelligent Transportation Systems Conference – Toronto: IEEE ITSC, 2006. – pp. 1621.–1626.

17.UK Highways. Design Manual for Roads and Bridges. UK Highways Agency. – 1992.

18.Bernardin V., Conger M. From Academia to Results from Calibration and Validation of First Hybrid Accessibility-Based Model// Journal of the Transportation Research Board. – 2010. – Vol. 2176. – pp. 50.–58.

19.Bierlaire M., Crittin F. An efficient algorithm for real-time estimation and prediction of dynamic OD tables// Operations Research. – 2004. – Vol. 52 (1). – pp. 116.–127.

20.Bowman J., Ben-Akiva M. Activity-based Disaggregate Travel Demand Model System with Activity Schedules// Transportation Research A. – 2000. – pp. 1.–28.

21.Park B., Qi H. Development and Evaluation of Simulation Model Calibration Procedure

22.TSS. Microsimulator and Mesosimulator in Aimsun 6. Transport Simulation Systems. – 2009.

Chapter 6 Economics of road transport

6.1 General Provisions

The objective conditions of Ukraine's economic development determine its orientation towards dynamic integration into the global economic system and, above all, towards economic integration with the EU. This process will undoubtedly lead to an increase in trade exchange processes between Ukraine and EU member states. On the other hand, Ukraine's geostrategic location enables it to be a favorable bridge for the transit transportation of goods and passengers between European, Asian, and Middle Eastern countries. One of the systems ensuring the transportation of cargo and passengers through the territory of Ukraine is the transport system, which, under market conditions, is subject to high requirements regarding the quality, regularity, and reliability of transport connections, cargo safety, passenger transport security, speed, and cost of delivery. Accordingly, the condition of Ukraine's transport communications must meet the requirements of European integration.

The economy of a motor transport enterprise is a sectoral science that studies the forms of manifestation of economic laws and their practical application in motor transport, the economic nature, features and patterns of development of motor transport, methods and ways of solving economic problems to increase the efficiency and quality of its operation and to fully meet the state's demand for cargo and passenger transportation with minimal costs.

With the development of society, the economic and social significance of transport is constantly growing. Transport belongs to the branch of the economy that has a significant impact on the development of all sectors of the national economy.

A motor transport enterprise is an organizationally separate and economically independent primary unit of the production sphere of the economy that provides services for the transportation of goods and passengers with the aim of making a profit.

In a broad sense, a motor transport enterprise is an important, complex, open, unique, and necessary phenomenal system based on its production-technical, organizational, and economic structure, aimed on the one hand at satisfying the needs of citizens and developing the national economy, and on the other – at increasing the efficiency of its functioning (maximizing profit with minimum costs).

Such an interpretation requires some clarification. First, the phenomenological approach refers to a view of relations within a business structure as a multifaceted phenomenon. That is, such a system can be influenced simultaneously by legal, informational, economic, psychological, and other phenomena or relations. Second, the system is important because it ensures a certain degree of economic mechanism development of the enterprise by mobilizing resources, funds, etc. Third, the system is called complex because it ensures the interaction of completely heterogeneous participants in its relations (supplier, enterprise, intermediary, consumer). Fourth, the openness of the system is manifested in its interaction with a large number of market participants who have free access to it. Fifth, the system is a primary link, i.e., the foundation of the national economy. Sixth, the system is necessary because the level and dynamics of national economic development depend on its efficiency. That is, the system, working for its own development, ensures the development of the entire country's economy.

In a narrow sense, a "motor transport enterprise" should be understood as a system of its links (production, technical, organizational) aimed at maintaining its activity and development.

The main goal of a motor transport enterprise as a system is: from the macroeconomic point of view – to meet consumer demand for its services with high consumer properties and quality at minimal cost, to increase its contribution to the development of the national economy; from the microeconomic point of view – to maximize profit through better use of its market opportunities.

Each motor transport enterprise is a legal entity, has a complete accounting and reporting system, an independent balance sheet, settlement accounts in a bank, a seal with its name, a trademark (term, symbol, drawing, their combination). A brand mark is necessary to identify the company's services and distinguish them from competitors' products.

A motor transport enterprise carries out cargo and passenger transportation on the basis of commercial calculation, self-sufficiency, self-financing, and independence.

Motor transport enterprises are classified by the following characteristics:

- by form of ownership of property: private (enterprises based on the ownership of individual citizens with the right to hire labor); collective (enterprises based on the ownership of the labor collective); state (property belongs to the state or administrative-territorial units); joint (with mixed ownership);
- by capital ownership: national, foreign, mixed;

- by legal status and form of management:
  - sole proprietorships;
  - cooperative (voluntary associations of citizens for joint economic or other activity);
  - lease-based (based on contractual relations of temporary possession and use of property needed by the lessee for business activity);
  - business companies – associations of entrepreneurs. Types:
    a) joint-stock companies (closed or open type) with charter capital divided into shares of equal nominal value, and participants are liable only with the property of the company;
    b) limited liability companies (charter capital is divided into shares defined in statutory documents; participants are liable only within their contributions);
    c) additional liability companies (participants are liable with their contributions and, if insufficient, with their own property proportionally);
    d) general partnerships (all participants are engaged in joint business and bear joint liability with all their property);
    e) limited partnerships (including one or more participants fully liable with their property, and others – limited to their contribution);
- by technological (territorial) integrity and subordination:
  - parent (controlling others);
  - subsidiary (legally independent but controlled by the parent through share ownership);
  - associated (independent, not controlled by share ownership);
  - branches (not legally independent, no statute or balance sheet, operate on behalf of the main enterprise);
- by enterprise size (number of employees): small; medium; large;
- by purpose:
  - transport carriers (perform transportation of goods and passengers);
  - industrial transport enterprises (repair units and capital repair of vehicles);
  - service enterprises (technical service stations, centralized service bases).

Today, transport enterprises generally meet transportation needs, but differentiation has occurred. International freight transportation is most successful and attractive to most entrepreneurs due to stable income. Intercity and international bus transportation is almost self-regulating. At the same time, urban and domestic passenger transport is in significantly worse condition.

The main technical and economic features of road transport include:

- higher speed of cargo delivery compared to rail, river, and sea transport;
- wide maneuverability and high mobility;
- significant cost-effectiveness in short-distance and valuable or urgent long-distance shipments;
- ability to deliver cargo between types of transport;
- ensuring the quantity and quality of cargo transportation;
- adaptability to road conditions.

At the same time, the main disadvantages of road transport include:

- higher capital intensity and cost;
- low level of transport safety;
- significant air pollution from exhaust gases.

6.2 Technical and Operational Indicators of Road Transport Usage

Public transport, as an independent branch of production, is distinguished by a number of features compared to other sectors of material production. In other sectors of material production, the properties of the objects of labor, their form and content, change, and new products are created that differ in their properties or form from the original materials used. As a result of the transport process, no new tangible product is created. Unlike the output of industrial and agricultural production, the output of transport does not exist outside the transport process, since the useful effect of the transport process is directly related to the movement of goods or passengers from one spatially located place to another. Therefore, transport output is the movement of passengers and goods through space and time, which determines the useful effect of transport production.

Thus, a specific feature of transport production is that its output does not exist outside the production process, that is, outside the transport process. Since the output of transport is transportation itself, the

processes of its production and consumption occur simultaneously. This particularity of transport must be taken into account when planning the development of an enterprise and determining the planned volume of transportation, because the useful effect created by transport (i.e., transportation) cannot be stored in warehouses or produced in advance. Therefore, it is important to ensure the continuous and uniform use of transport vehicles over time, in line with the growth in freight and passenger volumes. For this purpose, reserves of transport vehicles and their carrying capacity should be created within reasonable limits.

Transport output in the form of the movement (transportation) of goods and passengers is measured by physical indicators that reflect the final economic effect and show the amount of goods and passengers transported over a given distance. For freight transportation, such indicators of transport output include: the amount of goods transported in tons, transportation distance in kilometers, and transport work performed in ton-kilometers (the product of the tons of freight transported and the transportation distance in kilometers), which reflects the overall freight turnover of the transport system. For passenger transportation, transport output indicators include: the number of passengers carried, passenger turnover (passenger-kilometers), and revenue from transportation services.

The production program for the use of the vehicle fleet is calculated based on its carrying capacity — the volume of transportation, passenger and freight turnover that can be carried out by the motor transport enterprise (MTE) during the planned year using the available fleet. At the same time, it is necessary to take into account the inflow and withdrawal of vehicles and trailers, as well as the following indicators: vehicle dispatch coefficient, average time a vehicle and trailer are in service, loading and unloading time, technical speed, mileage and payload coefficients, and output measured in tons and ton-kilometers per average listed ton of a vehicle or trailer.

To calculate the production capacity, it is necessary to first determine the average listed number of vehicles and trailers:

$$A_{av} = \frac{Q_p \times \left(l_{ie} + t_{l-r.p.} \times v_T \times \beta\right)}{T_n \times v_T \times \beta \times q_n \times \gamma_{em} \times D_k \times \alpha_B},$$

where:

A_{av} — average number of vehicles, units;
Q_p — annual vehicle output, tons;
α_B — vehicle line dispatch coefficient;
q_n — nominal load capacity of the vehicle, tons;
γ_{em} — static load utilization coefficient;
v_T — technical speed of the vehicle, km/h;
β — mileage utilization coefficient;
T_n — number of calendar days in a year;
$l_{ie} l$— average distance of one trip, km;
$t_{l-r.p.}$ — time for loading and unloading per trip, hours;
D_k — working days coefficient.

The transport capacity of the fleet, based on vehicle types and models, is calculated using the formula, tons/year:

$$W_{year} = \frac{AD_G \times \alpha_B \times q_n \times \gamma_{em} \times v_T \times \beta \times T_n}{l_{ie} + v_T \times \beta \times t_{l-r.p.}},$$

where:

AD_G — vehicle-days in the fleet.

Such opportunities and reserves include the improvement of operational indicators based on the advanced experience of individual drivers and its dissemination to all drivers of the motor transport enterprise. These indicators include γ_{cm}, v_T, $t_{l-r.p.}$, β All operational indicators are established separately for each type of transportation and vehicle category.

The static load utilization coefficient γ_{cm} is determined according to the class of cargo being transported.

The technical and operational indicators of the vehicle fleet utilization plan are calculated using the following formulas:

number of transport cycles (trips):

$$n_c = \frac{Q_T}{q_n \times \gamma_{cm}},$$

where:

Q_T — amount of cargo transported, tons;

mileage with cargo, km:

$$L_{cargo} = l_{ie} \times n_c,$$

total mileage of the fleet, km:

$$L_{total} = \frac{L_{cargo}}{\beta},$$

mileage utilization coefficient:

$$\beta = \frac{L_{cargo}}{L_{total}},$$

number of vehicle-days of operation:

$$AD_P = AD_G \times \alpha_B, \quad \text{or} \quad AD_P = \frac{Q_T}{Q_{unit}},$$

where:

Q_{unit} — amount of cargo transported by one vehicle per day, tons;

or

$$AD_P = \frac{\sum T_{mv} + \sum T_{idle}}{\sum T_n},$$

where:

T_{mv} — movement time, hours;

T_{idle} — idle time, hours;

T_n — duration of the accounting period, days;

number of vehicle-days in the fleet:

$$AD_G = A_{cn} \times D_k,$$

where:

A_{cn} — number of vehicles on the list;

D_k — calendar days of the period;

number of vehicle-hours on the line:

$$AG_P = AD_P \times T_n,$$

daily mileage per vehicle, km:

$$L_{day} = \frac{L_{total}}{AD_P} \quad \text{or} \quad L_{day} = T_n \times \upsilon_E,$$

where:

υ_E — operational speed of the vehicle, defined as:

$$\upsilon_E = \frac{\upsilon_T \times l_{ie}}{l_{ie} + t_{l-r.p.} \times \upsilon_T \times \beta},$$

actual duration of vehicle operation, hours:

$$T_n = n_c \times t_t,$$

where:

t_t— trip duration, hours, calculated as:

$$t_t = \frac{l_{ie} + t_{l-r.p.} \times \upsilon_T \times \beta}{\upsilon_T \times \beta},$$

or

$$T_n = \frac{\sum T_{mv} + \sum T_{idle}}{\sum AD_P}, \quad \text{or} \quad T_n = \frac{AD_P \times T_{n.f.}}{\sum AD_P},$$

where:

$T_{n.f.}$ — actual time the vehicle is in operation, hours.

Average load capacity of the fleet, tons:

$$q_{avg} = \frac{\sum n_c \times q_n}{\sum n_c},$$

total movement time of the fleet, hours:

$$T_p = \frac{L_{total}}{\upsilon_T}, \quad \text{or} \quad T_p = T_n - T_{l-r.p.},$$

vehicle dispatch coefficient:

$$\alpha_B = \frac{AD_P}{AD_G},$$

specific output per 1 ton of load capacity, ton:

$$W_Q = \frac{\upsilon_T \times \beta}{l_{ie} + t_{l-r.p.} \times \upsilon_T \times \beta},$$

technical speed, km/h:

$$\upsilon_T = \frac{L_{total}}{T_{mv}},$$

average loading/unloading time per cycle across the fleet, hours:

$$t_{l-r.p.}^{avg} = \frac{\sum n_c \times t_{l-r.p.}}{\sum n_c},$$

average distance per 1 ton of transported cargo, km:

$$l_{avg.ton} = \frac{P_{tkm}}{Q_T},$$

average loaded trip distance, km:

$$l_{ie} = \frac{L_{cargo}}{n_c}$$

Vehicle output Q_{day} in tons of cargo transported per day is calculated by the formula:

$$Q_{day} = n_c \times q_n \times \gamma_{cm} = \frac{T_n \times q_n \times \gamma_{cm} \times \upsilon_T \times \beta}{l_{ie} + \upsilon_T \times \beta \times t_{l-r.p.}}$$

Vehicle output in ton-kilometers (P) — transport work is calculated by the formula:

$$P = \frac{T_n \times q_n \times \gamma_{cm} \times \upsilon_T \times \beta}{l_{avg.ton} + \upsilon_T \times \beta \times t_{l-r.p.}}$$

Total volume of transportation Q is calculated as:

$$Q = \frac{T_n \times q_n \times \gamma_{cm} \times \upsilon_T \times \beta}{l_{ie} + \upsilon_T \times \beta \times t_{l-r.p.}} \times A_{cn} \times D_k \times \alpha_B .$$

Total freight turnover P_{total} (transport work):

$$P_{total} = Q \times l_{ie}$$

In the production program for passenger transportation, the number of passenger trips is determined by population groups (workers, employees, retirees, etc.) according to the formula:

$$N_T = \sum N_i^T \times \eta \times D_p \times n_o ,$$

where:

N_i^T — population size of each group, persons;

η — adjustment coefficient for the population that does not use transport (typically $\eta = 0.75 \div 0.8$);

D_p — number of trip days per year (e.g., 200 for workers and employees, 240 for students, 365 for others);

n_o — number of daily trips for each group (two trips for work or study, one for cultural or personal purposes).

Estimated mobility norms:

Large cities: 400–600 trips/year

Medium cities: 150–250 trips/year

Small towns: ~125 trips/year

When determining the number of passenger trips, considering other types of transport (except for bus and taxi transport), it should be taken into account that approximately 40–55% of all trips fall on bus transport, and 3.0–20% on taxi transport (depending on the type of city group).

When solving the issue of determining the transportation volume, it is advisable to establish the specific weight based on extrapolation from actual compiled data, considering expected changes in passenger trip numbers.

The route length l_M and average travel distance l_P for passengers are determined based on enterprise data or:

l_P is considered to be 3.6–5.1 km for urban transport,

up to 50 km for suburban,

and over 50 km for intercity.

The passenger turnover coefficient η_{ZM} is determined by the formula:

$$\eta_{ZM} = \frac{l_M}{l_P} = \frac{\gamma_{cm}}{\gamma_{dyn}},$$

where:

γ_{dyn} — coefficient of dynamic passenger capacity utilization.

Bus frequency and headway (interval) are calculated as:

$$U = \frac{A_M}{t_{ob}}, \qquad I = \frac{60}{A_M},$$

where:

A_M — number of buses on the route;

t_{ob} — bus turnaround time on the route, minutes.

It is necessary to keep records for each route separately for urban and intercity passenger transportation.

Average daily mileage can be calculated as:

$$L_{day} = T_n \times \upsilon_E .$$

Number of passengers transported by one bus during a year on the route Q_{pas} is determined by the formula:

$$Q_{pas} = 365 \times q_a \times \gamma_h \times \eta_{zm} \times n_p \times \alpha_B, \quad \text{or} \quad Q = \frac{T_n \times q_a \times \gamma_{cm} \times \upsilon_E \times \beta}{l_{ie}} \times A_{cn} \times D_k \times \alpha_B ,$$

where:

q_a — bus capacity, seats;

γ_h — seat occupancy coefficient;

n_p — number of trips, determined by dividing the productive time of the bus on the route T_p by the time spent on one trip t_p;

α_B — bus dispatch coefficient.

Output of a listed bus P_n per year in passenger-kilometers — passenger turnover:

$$P_n = 365 \times \alpha_B \times L_{day} \times \beta_a \times q_a \times \gamma_h, \quad \text{or} \quad P_n = \frac{Q_p \times l_{cp}}{n},$$

where:

β_a — bus mileage utilization coefficient.

Annual bus mileage with passengers is calculated as:

$$L_p = L_{total} \times \beta_a$$

Average passenger travel distance by taxi l_{cp} is determined from enterprise data by dividing the paid mileage L_{pn} by the number of trips (according to taximeter data).

Annual number of passengers transported by taxis:

$$Q_{pas.tax} = \eta_n \times n_j \times q \times \nu ,$$

where:

η_n— number of trips per year per city resident;

ν — seat occupancy coefficient of a taxi (usually taken as 0.5).

Annual passenger turnover:

$$P_n = Q_{pas.tax} \times l_{cp} .$$

Annual paid mileage of a taxi:

$$L_{pn} = L_{total} \times \beta_n .$$

Total annual revenue of taxi transport is planned as:

$$D = t_{pn,km} \times L_{pn,km} + t_n \times n_n + t_{op} \times AG_{op} ,$$

where:

$t_{pn,km}$, t_n, t_{op} — tariffs per km, per trip, and per hour of paid waiting time;

AG_{op} — vehicle-hours of paid idle time.

6.3 Technical and economic indicators of road transport

Road transport plays a key role in ensuring logistics processes, transportation efficiency and economic development. For an objective assessment of its activities, a system of technical and economic indicators is used, which allows analyzing the rational use of resources, vehicle productivity, resource consumption, profitability and quality of services.

The comprehensive use of technical and economic indicators allows:

- to compare the efficiency of different road transport enterprises;
- to identify reserves for increasing productivity and reducing costs;
- to make informed management decisions;
- to improve the quality of logistics services and the competitiveness of transport.

Among the technical and economic indicators, the best assessment is given by the cost of transportation (₴/ton-km or ₴/passenger-km), financial and economic results of the transport enterprise.

6.3.1 Production costs in transport and the cost of transportation

Production costs in the transport industry are a set of monetary costs associated with the provision of transport services, that is, with the process of transporting goods or passengers. They directly affect the cost of transportation, which is the main indicator of the efficiency of a transport enterprise. It reflects all aspects of the company's production and economic activities. The better the enterprise works, the more economically and rationally it uses its own resources, the more successfully it improves its equipment, the lower the cost of transportation will be. This is manifested in the fact that the cost serves as the basis for the transportation tariff and its lower limit for the enterprise to ensure the process of reproduction of production. It is unprofitable for the enterprise to issue tariffs below the cost, since in this case it risks incurring losses.

When calculating the cost of transportation, it is important to determine the costs included in it.

The cost of transportation is the current expenses of transport enterprises, expressed in monetary terms, directly related to the preparation and implementation of the process of transporting goods and passengers, as well as the performance of works and services that ensure transportation.

The cost of transportation (or production cost) includes the following cost elements:

1) drivers' wages;

2) social security contributions;

3) material costs, namely: costs for fuel, maintenance and repair of rolling stock, purchase and replacement of lubricants, restoration of tire wear; purchase of customs documents, road tolls, payment for the services of forwarding companies, payment for toll highways, ferry crossings, passage through tunnels and bridges, insurance;

4) depreciation deductions for rolling stock;

5) other costs: rent; costs for maintaining buildings, structures, territories of the road transport enterprise; parking lots; fines; costs for labor protection and safety; depreciation deductions for the renovation of fixed assets, except for rolling stock; travel expenses and so on.

The cost price of a unit of transport product is determined by the formula:

$$CP = \frac{\sum C}{Q}$$

where:
CP – cost price of a unit of transport,
ΣC – total amount of costs,
Q – volume of transport performed (in ton-kilometers, passenger-kilometers and so on).

The structure of the cost price of transport depends on many factors, in particular, on the direction of movement, distance of transport, type of transport, etc. For example, for international transport when using a Euro truck and transporting general cargo, the cost price structure will have the following form (Table 6.1):

Table 6.1 – Cost structure of international road transportation

Expense items	Cost structure, %
Payroll Fund	21,4
Payroll accruals	4,7
Fuel and lubricants	38,2
Tire costs	8,8
Maintenance and repair costs	1,5
Depreciation of rolling stock	18
Other expenses	7,4
Total expenses	100

The cost of transportation is the basis for determining the transportation tariff.

A transportation tariff is a set fee for the transportation of goods or passengers, which is paid by the customer of a transportation service to the carrier. The basis of transportation tariffs is the socially necessary labor costs for the delivery of goods, which determines the cost of transportation.

Any enterprise, including a transport enterprise, must make a profit to expand its activities, update equipment, improve technological processes, and stimulate labor. Therefore, transportation tariffs also include a profit, the level of which depends on the type of transport, type of cargo transportation, type of cargo and so on.

6.3.1.1 Ways to reduce transportation costs

Road transport enterprises are constantly working to reduce the cost of transportation. The relatively low cost of transportation services provides the enterprise with protection from competitors, from the dictates of suppliers, and also ensures the competitiveness of the enterprise compared to other enterprises that may be chosen by the client when placing an order for transportation as an alternative.

The reduction in the cost of freight transportation occurs as a result of improving such operational indicators as the load capacity and mileage utilization factor, the technical speed of the vehicle and the time in the outfit.

In bus transportation, a reduction in the cost is achieved due to an increase in the operating speed, mileage utilization factors and bus capacity, and an increase in the duration of the working day.

In taxi transportation, the cost can be reduced by increasing the paid mileage factor.

Reducing the cost of transportation by increasing the technical readiness factor of the rolling stock fleet contributes to an increase in the operating time of vehicles, an increase in their mileage and the productivity of their fleet. At the same time, the share of general production costs is reduced.

Fuel consumption for cars is reduced by improving the technical condition of rolling stock, proper adjustment of units and devices. Fuel consumption can be reduced by using differentiated norms of irrigation consumption for each route depending on the condition of the road surface, traffic intensity, route length and other indicators, as well as due to good organization of its distribution and accounting.

Lubricant consumption is reduced by organizing control over their use, as well as by improving the technical condition of cars.

Reducing tire costs can be achieved by proper technical operation: maintaining normal air pressure, proper adjustment of the car's chassis, timely wheel rotation, skillful driving.

Reducing maintenance costs is achieved by increasing the mileage between repairs due to timely and high-quality performance of all types of maintenance, compliance with the rules of technical operation of rolling stock and performance of PR in the required time and with high quality.

Wage costs in the total costs of maintaining a fleet can be reduced by reducing labor costs per unit of transport output. This is achieved by increasing the productivity of drivers, conductors, repair workers. Labor productivity can be achieved by reducing working time costs for various reasons.

The reduction in general production costs occurs as a result of saving money on fleet maintenance, staff reductions, strengthening financial control and other measures.

6.3.1.2 Direct-Costing and Standard-Cost systems as a way to reduce costs

In the field of determining ways to reduce production costs, the Direct-Costing and Standard-Cost systems are used.

The essence of direct costing is to divide the production cost into costs that are constant and costs that change in proportion to the change in the volume of work - variables.

Direct (variable) costs of a transport enterprise include the wages of drivers, repair workers; costs of automobile fuel and automobile tires; depreciation deductions that restore the wear of rolling stock; costs of operating and repair materials, spare parts. Costs that are not included in the full cost: general production costs; general administrative costs; commercial costs are reimbursed in a single amount from revenue.

Simple direct costing is based on the following principles:

- costs are divided into fixed and variable;
- the cost of production is calculated only by variable costs;
- the margin on variable cost (marginal income) is determined as the difference between the selling price and the variable cost.

Marginal income is the difference between the income from the sale of products and variable costs. It covers the total fixed costs:

$$Rm = Q – Cv; Rm = Cf + P,$$

where:
Q – volume of transportation (works, services);
Cv – variable costs;
Cf – fixed costs;
P – profit.

If the amount of marginal revenue is less than the amount of fixed costs, then the financial result of the release is a loss, and if more, a profit. The total of direct and variable costs is the minimum selling price necessary for break-even work.

An important advantage of the Direct-Costing method is the speed of obtaining data that characterizes a small period of economic activity. The use of the Direct-Costing method is more appropriate in conditions of depression and inflation than in conditions of economic recovery.

In conditions of depression, the manager controls variable costs more than fixed ones. Indeed, fixed costs will increase only after the expansion of production.

Another method (Standard-Cost) consists in accounting for the cost of transport services at individual actual costs, which are compared with the corresponding regulatory costs for the transportation of goods and passengers. The main idea of the "standard-cost" method is to develop norms to which the enterprise should strive. Standard-Cost is a predetermined or predicted cost estimate for the production of one product or several products of the same type during a certain reporting and previous period, with which the actual cost is compared.

The content of the Standard-Cost system is that only what should happen is taken into account, not what has happened, not what is real, but what is due, and deviations that have arisen are reasonably reflected. It is based on a clear, firm introduction of norms for the consumption of materials, energy, working hours,

labor, wages and other costs associated with the manufacture of any product or the provision of work or services. In addition, the established norms cannot be under-fulfilled. Exceeding the norm over the fact means that it was set incorrectly. The basis of the Standard-Cost system is, undoubtedly, the calculation of future (expected) costs.

Expected costs are determined on the basis of standards (norms and standards) calculated within the companies. These standards are the basis of the functioning of the system and reveal its content.

Both systems – Direct-Costing and Standard-Cost – are effective management accounting tools. In the transport industry:

• Direct-Costing helps to make operational decisions: for example, to determine whether it is advisable to carry out transportation at a reduced rate without harming profit.

• Standard-Cost allows you to set cost norms for a trip, compare with actual ones and reduce overruns.

6.3.2 Financial and economic results and efficiency of transport activities

Financial and economic results of transport activities are a set of indicators that characterize the income, expenses, profits and overall efficiency of the functioning of a transport enterprise or industry as a whole. They make it possible to assess:

• how efficiently resources are used;

• whether the enterprise is profitable;

• how changes in tariffs, costs or volumes affect results.

6.3.2.1 The essence and formation of income and profit of a transport enterprise

The final result of the enterprise's activities - the profit (loss) it receives - is generally determined by the difference between its income and expenses.

The amount of income of a transport enterprise depends on the volume of transport services provided and the price per unit of these services, i.e. tariffs. In addition, income from other types of enterprise activities is also taken into account.

Income, depending on their nature, conditions of receipt and areas of activity of the enterprise, is divided into two main groups:

– income from ordinary types of activities of the transport enterprise;

– other income.

Income from ordinary activities includes income from:

• all types of transportation;

• sending cars for work outside their permanent place of residence;

• providing cars and trucks to other organizations and individuals on a rental basis;

• forwarding operations carried out in combination with the main activity;

• loading and unloading operations performed by a transport enterprise;

• warehousing operations, if they are performed by the company's own forces;

• delivery (transportation) of new and repaired cars from automobile and car repair factories, etc.

Other income includes:

• income related to the provision of temporary use of vehicles or production areas for a fee;

• the cost of materials or other property that was formed during dismantling or dismantling in the process of liquidating decommissioned fixed assets;

• interest received for providing other organizations with funds of a transport enterprise for use, as well as interest for the use by the bank of funds that are on the enterprise's account in this bank;

• fines, penalties, penalties paid by customers, suppliers or other economic partners in case of violation of the terms of contracts;

• income that arose as a result of the consequences of extraordinary circumstances of economic activity (natural disasters, fires, accidents, etc.): insurance compensation, the cost of material assets that are unsuitable for further use, etc.

The general financial indicator of the enterprise's activities is its profit, which characterizes the final financial result of the production and economic activity of the entire enterprise, that is, it forms the basis of its economic development.

Profit is that part of the revenue that remains after reimbursement of all costs for the production and commercial activities of the enterprise.

Profit (loss) is calculated as the difference between the income that the enterprise receives for the performed transportation (freight or passenger) and the cost of transportation.

Profit is the amount by which income exceeds the associated costs, and loss is the excess of the amount of expenses over the amount of income for which these costs were incurred.

Depending on the formation and distribution, gross and net profit are distinguished.

Gross profit (loss) is calculated as the difference between income for the performed transportation and their cost.

$$GP(L) = I - C$$

Net profit (loss) is determined by deducting relevant taxes, fees, discounts, etc. from gross profit.

$$NP(L) = GP(L) - VAT - D$$

where:

GP(L) - gross profit (loss);

NP(L) - net profit (loss);

I - income for the performed transportation;

C – cost;

VAT - value added tax;

D - other deductions.

The net profit remaining at the disposal of the enterprise is used by it at its own discretion. It serves as a source for:

- the accumulation fund (sent to meet the material needs of the enterprise's employees, financing non-production facilities, compensation payments and dividend payments);
- the consumption fund (used for the production development of transport company, technical re-equipment, development of new products, construction and renovation of fixed assets, development of new equipment and technology, something like that);
- the financial reserve, which is created to maintain a stable financial position of the enterprise.

Thus, profit plays a decisive role in stimulating further improvement of production efficiency, strengthening the material interest of employees in achieving high results of their enterprise's activities.

6.3.2.2 Enterprise performance

The overall, final result of the enterprise's work is assessed by the level of efficiency of its economic activity.

The efficiency of the transport enterprise is the level of use of resources (equipment, personnel, fuel and lubricants, time) to achieve planned results with the lowest costs and maximum profit over a certain period of time.

The main indicators of the enterprise's efficiency, which characterize the intensity of management, are profit and the relative profit indicator - profitability.

The absolute amount of profit does not characterize the level of efficiency of economic activity. To draw a conclusion about the level of efficiency of economic activity, the profit received must be compared with the expenses incurred or assets that provide entrepreneurial activity, that is, to determine profitability.

Thus, profitability is a comparison of financial savings to expenses.

The overall profitability of an enterprise is defined as the ratio of the amount of profit (P) to the average cost of fixed assets (FA) and working capital (WC), which are normalized, that is, the costs embedded in the production activities of the enterprise.

Profitability is calculated using the formula:

$$R = \frac{P}{\mathrm{FA} + \mathrm{WC}} \cdot 100\%$$

The profitability of transportation is determined by the formula:

$$R = \frac{P}{Et} \cdot 100\%$$

where:
P - amount of profit;
FA - cost of fixed assets;
WC - cost of working capital;
Et - total expenses/

As can be seen from the graph (Fig. 6.1), with an increase in profit or a decrease in costs, the profitability of the enterprise increases.

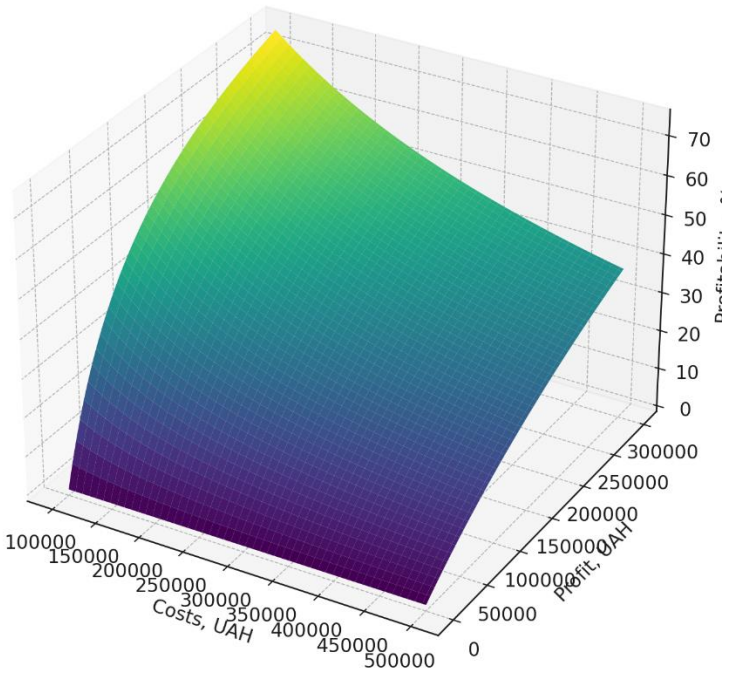

Fig. 6.1 – Dependence of the profitability of a transport enterprise on profits and expenses

The level of profitability is influenced by many factors. These factors include a set of actions and measures that will contribute to increasing the efficiency of the enterprise, namely: increasing the volume of services sold; increasing employee productivity; introducing an effective marketing policy; improving the quality of services and their competitiveness. One of the most important factors influencing the profitability of the enterprise is an increase in the volume of services sold. The more services the enterprise provides, the greater the amount of profit, which has a positive effect on profitability.

REFERENCES

1. IVANILOV O.S. Economics of road transport enterprises: a textbook for students of higher educational institutions / O.S. Ivanilov, I.A. Dmitriev, I.Yu. Shevchenko. − Kh.: FOP Brovin O.V., 2017. − 632 p. ISBN 978-617-7256-91-4

2. DMITRIEV I.A. Economics of road transport enterprises: a textbook for independent work and current control of knowledge of students of higher educational institutions / I.A. Dmitriev, O.S. Ivanilov, I.Yu. Shevchenko., I.M. Kyrchata − Kh.: FOP Brovin O.V., 2018. − 308 p. ISBN 978-617-7555-88-8

3. KORETSKA S.O. Economics of road transport: a textbook / S.O. Koretska, A.Yu. Yakymchuk, T.S. Karpan. − Rivne: NUVGP, 2012. − 309 p.

Наукове електронне видання CD-ROM

Team of authors :
FRATITA Michael, **ROBERT-MADALIN** Chivu, **SAMOSTIAN** Viktor, **FEDOSOV** Serhiy, **BUNEA** Marina, **SITOVSKYI** Oleg, **PAVLIUK** Vasyl, **PRYSTUPA** Stanislav, **ZABLOTSKYI** Valentyn, **HNATOV** Andrii, **SHCHASIANA** Arhun, **ULIANETS** Olha, **SOKHIN** Pavli, **DEMBITSKYI** Valerii, **PRYDIUK** Valentyn, **KUNICINA** Nadezhda, **ZENINA** Nadezda, **ROMANOVS** Andrejs, **CAIKO** Jelena, **MUROVANYI** Igor, **PAVLOVA** Irina, **ZAKHARCHUK** Oleg.

INTEGRATED COURSE «AUTOMOTIVE TRANSPORT»

Study guide for university students

Інтегрований курс «Автомобільного транспорту»

Навчальний посібник для студентів університету

Computer typing and layout: Viktor Samostian

The materials are published in the author's editorial office. The authors are responsible for the style and spelling of the paragraphs.

The book has been developed within the framework of the project "ERASMUS+ Capacity Building in Higher Education 2023", call for proposals 101127683-DIGITRANS-ERASMUS-EDU-2023-CBHE.

Один електронний оптичний диск (CD-ROM). Об'єм даних 21,7 Мб.
Наклад 300 пр. Зам. 121. Видавець і виготовлювач – Вежа-Друк
(м. Луцьк, вул. Шопена, 12, тел. (0332) 29-90-65).
Свідоцтво Держ. комітету телебачення та радіомовлення України
ДК № 4607 від 30.08.2013 р.

ВЕЖА-ДРУК
ISBN 978-966-940-703-0