Technologia i Automatyzacja Montażu

Volume 131, Issue 1/2026, Pages 32-38
https://doi.org/10.7862/tiam.2026.1.4

Original Research

THEORETICAL RESEARCH OF A NEW DESIGN OF A PARAMETRIC PRESSURE PULSE GENERATOR FOR A VIBRATORY HYDRAULIC DRIVE

BADANIA TEORETYCZNE NOWEJ KONSTRUKCJI PARAMETRYCZNEGO GENERATORA IMPULSÓW CIŚNIENIA DO HYDRAULICZNEGO NAPĘDU WIBRACYJNEGO

Roman OBERTYUKH[1] [0000-0003-2939-6582], Andrii SLABKYI[1] [0000-0001-9284-2296], Oleksandr POVSTIANOI[2] [0000-0002-1416-225X], Sergey SUKHORUKOV[1] [0000-0003-4201-1691], Sergey KOTYK[1] [0009-0000-9396-7189]

[1] Department of industrial machinery Engineerig, Vinnytsia National Technical University, Khmelnytske highway 95, Vinnytsia, Ukraine

[2] Automation and Computer-Integrated Technologies Department, Lutsk National Technical University, Lvivska Street, 75, Lutsk, Ukraine

* Corresponding author: povstjanoj@ukr.net tel.: (+380506611333)

Abstract

Based on the results of the analysis of known circuit and structural designs of pressure pulse generators in liquid, a new design of a single-stage parametric with increased throughput capacity has been developed according to the connection diagram to the executive hydraulic cylinder of the hydraulic pulse drive «at the inlet», the distribution links (first and second sealing stages) of which are combined with a high-rigidity slotted spring. The newly designed pressure pulse generators are used to control the hydraulic pulse drive with a parametric-type actuating hydraulic cylinder. To develop a scientifically sound methodology for the design calculation of the studied hydraulic impulse drive and pressure pulse generators, a dynamic model of the hydraulic pulse drive was developed. Based on this model and a sound structure of assumptions, a mathematical model of the hydraulic pulse drive was constructed and analysed. A new design of a vibration-impact device with a high-speed hydraulic pulse drive is proposed, which is mounted directly in the tool holder of a lathe without modifying the tool holder.

Keywords: mathematical model, vibratory drive, frequency, amplitude, hydraulic link, piston-hammer

Streszczenie

W oparciu o wyniki analizy znanych projektów obwodowych i konstrukcyjnych generatorów impulsów ciśnienia (GIC) w cieczy, opracowano nową konstrukcję jednostopniowego, parametrycznego PPG o zwiększonej przepustowości, zgodnie ze schematem połączeń z cylindrem hydraulicznym wykonawczym hydraulicznego napędu impulsowego (HNI) „na wlocie", którego ogniwa rozdzielcze (pierwszy i drugi stopień uszczelnienia) są połączone sprężyną szczelinową o wysokiej sztywności (WS). Nowo zaprojektowany PPG służy do sterowania HNI za pomocą parametrycznego siłownika hydraulicznego. W celu opracowania naukowo uzasadnionej metodologii obliczeń projektowych badanego hydraulicznego napędu impulsowego i PPG opracowano model dynamiczny HNI, na podstawie którego, wraz z poprawną strukturą założeń, zbudowano i przeanalizowano model matematyczny HNI. Zaproponowano nową konstrukcję urządzenia wibracyjno-uderzeniowego z szybkim hydraulicznym napędem impulsowym, które montuje się bezpośrednio w uchwycie narzędziowym tokarki, bez konieczności zmiany jego konstrukcji.

Słowa kluczowe: model matematyczny, napęd wibracyjny, częstotliwość, amplituda, połączenie hydrauliczne, młot tłokowy

This is an Open Access article distributed under the terms of the Creative Commons Attribution License CC BY 4.0 (https://creativecommons.org/licenses/by/4.0/)

1. Introduction

One of the ways to develop vibration technology is to minimize the size without deteriorating the technical characteristics (Maslov et al., 2021). Analysis of the results of studies on the development of vibrators with different types of drives (Hou, at al., 2025) has established that vibrators based on a hydraulic pulse drive using elastic elements of high stiffness (Cieplok, 2023; Mofidian & Bardaweel, 2018) have the smallest dimensions with significant oscillating power parameters.

Expanding the technical and technological capabilities of vibratory and vibro-impact machines and devices requires new design solutions, which in turn require detailed theoretical research (Shevtsova et al., 2010; Lingxia et al., 2022). The authors of the article propose a single-stage HIT design with an energy carrier throughput capacity equal to that of a two-stage of pressure pulse generators (PPG) (Cherno, 2017) due to an increase in the conditional passage. This is achieved by reducing the stroke of their locking elements by eliminating spool sealing (additional overlap h_b) at both levels of change in the area of the shut-off elements and the use of packing (valve) sealing and short slotted springs, the stiffness of which is determined at the limit of permissible stresses in the spring elements arising in the cross-sections of the SS at their maximum possible loads. The new design solution requires detailed theoretical and experimental research of the proposed design.

The traditional of vibratory and vibro-impact machines screen has the defect of large reference vibration mass, which leads to the increase of the excitation force required by the vibrating screen and the increase of the power consumption of the motor, and due to the increase of inertial force, it has a large impact on the structure of the vibrating screen, which reduces the vibrating screen life. Therefore, a double eccentric wheel-driven elliptical vibrating screen is proposed, and a series of theoretical derivations are carried out (Tang, 2024).

A relatively new direction of work is the creation, based on schematic search and development of experimental design samples of new hydropulse devices based on high-rigidity elastic elements, such as disc, slotted and ring springs.

2. Research object

The object of research is a hydraulic pulse drive.

The design diagram of a hydraulic pulse drive controlled by a single-stage high-capacity PPG connected to the executive hydraulic cylinder of the hydraulic pulse drive (HPD) according to the «input» (Obertyukh, 2022; Iskovych-Lototskyi, 2026) diagram is shown in Fig. 1.

The PPG HPD consists of a body 1 in which a first-stage sealing element 3 in the form of a conical valve combined with a slotted spring (hereinafter referred to as SS) is located in sleeve 2. The valve part of the locking element 3 contacts the conical face with the seat 4, fixed in the body 1 by the sleeve 2 with a cover 5, which is connected to the body 1, for example, by screws or pins (not shown in Fig. 1). The second stage of sealing the parametric PPG is implemented using a valve sleeve 6 with two sealing conical chamfers, one of which (lower in Fig. 1) contacts the larger chamfer of the seat 4, and the other (upper in Fig. 1) with the conical chamfer formed in the inner bore of the sleeve 2. The initial contact pressure on the surfaces of the ground lower chamfers of the valve sleeve 6 and seat 4 is provided by the force of the coil spring 7, which, through the stepped sleeve 8, the shank of which is directed along the cylindrical part of the outer surface of the valve sleeve 6 and serves as a guide for the spring 7, and the spring lock washer 9 presses the valve sleeve 6 against the lower chamfer of the seat 4. The other end of spring 7 (upper in Fig. 1) rests against the bottom of the sleeve bore 2, where a seat is formed for the upper conical chamfer of the second stage of the PPG seal.

The parametric type PPG executive hydraulic cylinder (Obertyukh, 2022) consists of a body (not shown in Fig. 1) and a stepped plunger 13 with two sealing stages – the first is a valve type with an average diameter d_3 of the conical chamfer, and the second is a spool type due to the precise coupling of the guide part with a diameter d_4 (diameter of the working area of the cross-section).

A feature of the design is the compactness of the structure due to the use of elastic elements of high rigidity and the construction of the structure based on a hydraulic pulse drive.

3. Research methodology (shortened and unified this section

The first degree of sealing of the parametric PPG is characterised by the average diameter of the ground 4 chamfer of the valve part of the shut-off element 3, and the second stage of sealing is characterised by the average diameter of the lower chamfer ground on the seat 4 and the upper sealing chamfer of the valve sleeve 6 ground on the seat formed in the sleeve bore. Since the position of these diameters in the middle of the sealing chamfers of the PPG sealing stages causes certain geometric inconveniences during PPG calculations, we accept the smaller diameters of the cones of the geometrical chamfers of the stages for the first

d_1 and second d_2 (Fig. 1). Given the small width of the sealing chamfers of the stages, this assumption will not have a significant impact on the accuracy of the PPG calculations.

The operating cycle of the developed drive, by analogy with known hydraulic drives (Iskovych-Lototskyi, 2026) machines and devices, can be divided into separate phases, which are usually combined into forward and reverse strokes of the shut-off elements of the hydraulic drive and the executive link (hydraulic cylinder plunger, piston, etc.) in the directions of the selected coordinates.

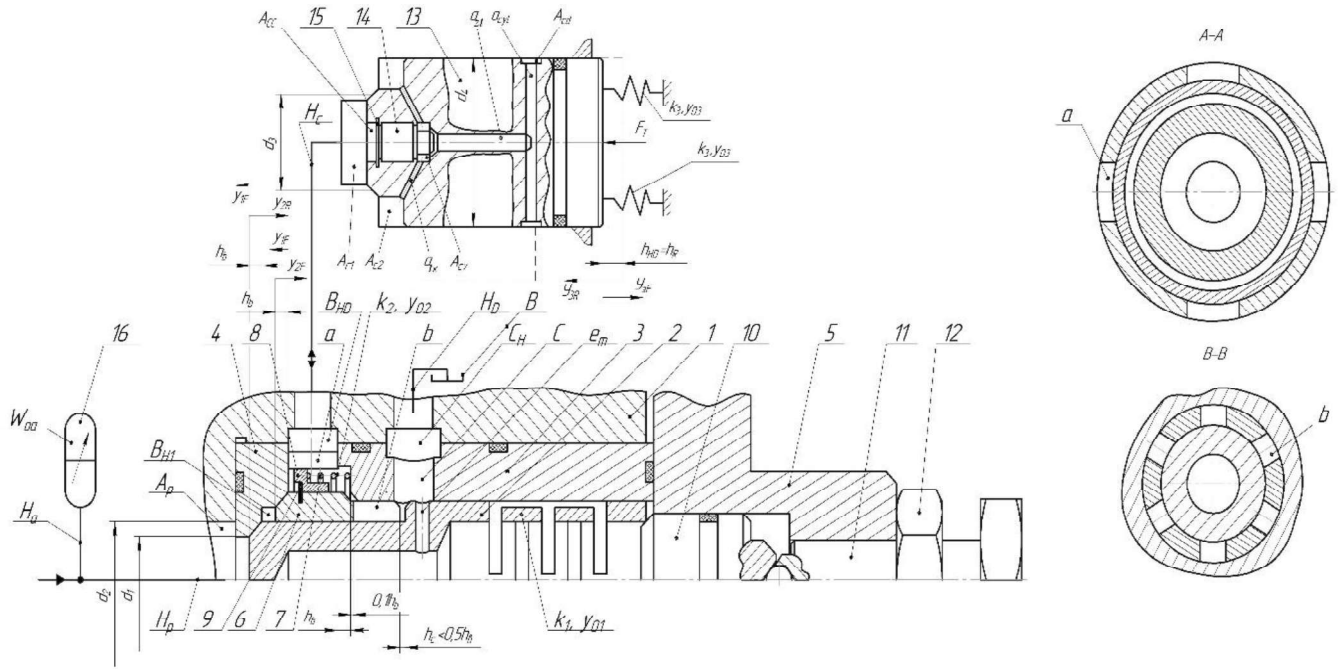

Fig. 1. Design diagram of a hydraulic pulse drive controlled by a single-stage pressure pulse generator with increased throughput capacity

This device can use a microprocessor-based built-in hydraulic drive diagnostics system, which is connected to the sensors via a control unit, a command console and information display means.

The information processing unit may contain:

- an admission control device with a control program and a library of emergency and warning messages;
- a device for searching and locating faulty hydraulic drive elements with a troubleshooting program and a library of faults;
- a device for grouping and displaying the values of the monitored parameters with a sampling program and a library of test messages.

After switching on the hydraulic pump of the HPD pumping station, its pressure begins to rise due to the compressibility of the energy carrier, and the cyclic hydraulic accumulator 16 is charged. At the energy carrier pressure level $p_r \geq p_1$, where the known dependence determines the «opening» pressure of the PPG.

$$p_1 \geq 4k_1 y_{01}/(\pi d_1^2) \approx 1{,}274 k_1 y_{01} d_1^{-2}, \qquad (1)$$

Due to the increase in pressure of the energy carrier in cavities A_{C1} and A_{CC} (freely connected to A_{C1}), the plunger valve 14 is pressed against the seat and disconnects the main working cavity A_{C2} from the drain cavity C_H, while plunger 13 detaches from the seat and the energy carrier under pressure p_1 enters cavity A_{C2} and acts on the entire area A_3 of the cross-section of plunger 13. The initial force F_{St} acting on the plunger 13, without taking into account the force of viscous and dry friction, can be estimated by the:

$$F_{St} = p_1 \cdot A_3 - 2k_3 \cdot y_{03} - F_T, \qquad (2)$$

where F_T – technological resistance force of the object affected by the executive hydraulic cylinder.

For achieving the pressure level $W_{0\Sigma}$ of the energy carrier pressure p_2 «closing» of the PPG, which can be calculated according to the known dependence:

$$p_2 \leq p_1 d_1^2 d_2^{-2} + 1{,}274 k_1 h_b d_2^{-2}, \qquad (3)$$

the reverse movement of the locking element 3 and the valve sleeve 6 begins, with their fixation at the end of

the reverse movement by a distance $h_в$ on the seat 4 in the initial position.

The cycle diagram shown (Fig. 2) does not take into account the preliminary processes that occur in a real HPD during its start-up and are repeated to a certain extent in successive HPD operating cycles. The presence of transitional processes is due to the action of friction forces during the movement of the PPG and HPD links, dissolved air in the energy carrier, and temperature variability of the HPD links during its operation, which affect the physical and mechanical properties of the energy carrier, such as its density ρ, elastic modulus κ, viscosity (dynamic μ_e and kinetic $\nu_e = \mu_e / \rho$) and other factors. The impact of these factors on the operation of the HPP can only be assessed through experimental studies of the HPD and PPG.

According to the cycle diagram (Fig. 2), between the pressure pulses of the energy carrier in the hydraulic accumulator 16, the movements of the shut-off element 3 of the PPG, the valve sleeve 6 of the PPG, plunger 13 of the HPD executive hydraulic cylinder, and the pressure pulse in the working cavities A_{C1} and A_{C2} of the hydraulic cylinder, there are phase shifts that determine the phased (sequential) nature of the dynamic process of the HPD.

Each phase of the working cycle of the HPD and PPG can be described by a system of differential equations of motion of the shut-off element 3, the valve sleeve 6 and the plunger 16 (Fig. 1), and the time intervals of the cycle are components of the uniqueness conditions for systems of differential equations and energy carrier consumption balance equations at each phase in particular and for the entire working cycle in general. As already noted, to simplify the mathematical description of the working cycle of HPD machines and devices based on it, it is customary (Obertyukh, 2024) to combine the individual phases of the drive cycle and PPG into the forward and reverse strokes of the moving links of the HPD and PPG.

The actual cyclogram of the working dynamic process of the HPD and PPG can be obtained in the course of experimental research of the HPD and PPG of the type under consideration by oscillographing the change in the pressure of the energy carrier in the pressure cavity of the HPD and the working cavities A_{C1} and A_{C2} of the hydraulic cylinder and the displacements y_1, y_2 and y_3, for example, of an experimental sample of the HPD controlled by the proposed PPG (see Fig. 1). Since the tested HPD can operate at the regulated pressure p_1 of the PPG «opening» and the hydraulic pump flow Q_H, which can be changed by diverting part of the flow through the flow regulator into the tank at different amplitude-frequency modes, the oscillograms of changes in p_r, p_{ts}, y_1, y_2 and y_3 may have different values of time intervals at separate phases of the cycle (Fig. 2) and shape.

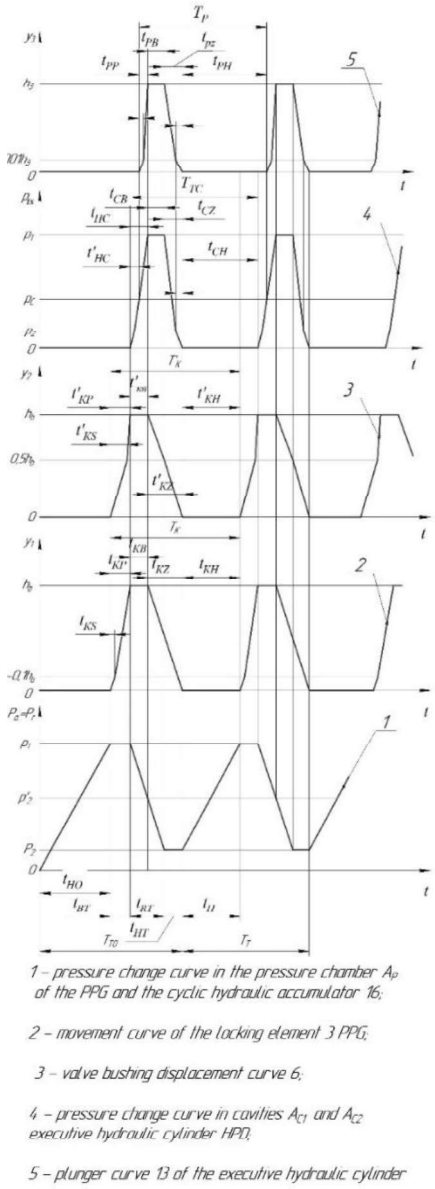

Fig. 2. Approximate cycle diagram of the working cycle of a hydraulic pulse drive controlled by a high-capacity pressure pulse generator

Since the cycle coefficient K_{cta} is a dimensionless quantity, it is advisable to also convert its time component to a dimensionless form by introducing the concept of the pressure pulse scale:

$$\mu_{tp} = T_T / 00' = 00' \cdot \upsilon, sec/mm \qquad (4)$$

where $00'$ – length of the segment on the pressure pulse cyclogram (Fig. 3) – Fig. 2, curve 1), mm; $00_1 = oa' + a'b' + b'c + co'$, mm.

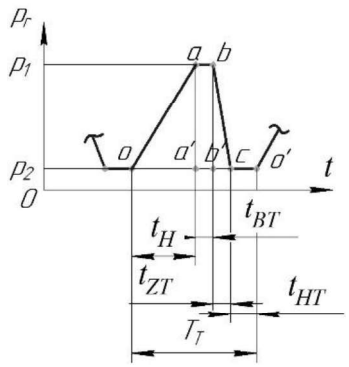

Fig. 3. The concept of scale and momentum of energy carrier pressure

The conversion of dimensional time intervals and dimensionless intervals is performed using simple formulas (see Fig. 2):

$$\begin{gathered} 00' = T_T/\mu_{tp};\ oa' = t_H/\mu_{tp}; \\ a'b' = t_{\mathrm{BT}}/\mu_{tp};\ b'c = t_{Z\mathrm{T}}/\mu_{tp}; \\ co' = t_{H\mathrm{T}}/\mu_{tp} \end{gathered} \tag{5}$$

The scheme of connecting the PPG to the executive hydraulic cylinder HPD «at the inlet» allows obtaining significant pressure pulse intensities in the working cavities of the executive hydraulic cylinders VM and VIM at relatively moderate flow rates Q_H of the hydraulic pumps of the hydraulic pump-accumulator stations of vibrating machines. For a number of vibration technologies, for example, vibration pressing of products from refractory powder materials, the intensity of pressure pulses, which determines the high intensity of the displacement pulse of the VM or VIM executive link (vibration table, etc.), is of decisive importance for obtaining high-quality products.

In the studied PPG, the locking element 3 Fig. 1) is combined with the elastic element SS, which imposes certain features on the movement of this first stage of PPG sealing, which can be divided into kinematic and deformation. The valve part of the shut-off element 3 performs a kinematic movement, while the SS of this element moves partly kinematically (for the most part) and partly deformatively. The immovable part of the SS of the shut-off element 3 is its support ring, which rests against the plunger 10 (Fig. 1).

A distinctive feature of the HPD is the relatively small volume $W_{0\Sigma}$ of the pressure chambers, which is achieved by the block layout of the hydraulic equipment closely connected to the distribution parallelepiped, in which all communication hydraulic channels and hydraulic lines are formed. The discharge outlet of the hydraulic pump, usually of the gear type, which works best under variable pressure conditions, since there is no weak link – suction and discharge valves, is connected by a short pipe to the distribution and support parallelepiped. The pipe is sealed with elastic seals, usually rubber rings of circular cross-section, installed in closed grooves (end seals).

The hydraulic pump, together with the drive electric motor, is mounted on a special frame equipped with screw devices that ensure the precise orientation (Obertyukh et al., 2021; Virnyk et al., 2007) of the discharge pipe relative to the distribution-supporting parallelepiped, with the special frame being mounted directly on the VM or VIM frame as close as possible to the distribution-supporting parallelepiped. The drain hydraulic lines are implemented by flexible rubber-fabric hoses connecting the central drain hydraulic line of the distribution-supporting parallelepiped to the tank of the HPD hydraulic system. This layout of the VM or VIM HPD allows to minimise the volume $W_{0\Sigma}$ and neglect the influence of the energy carrier mass in this volume on the dynamics of the HPD and PPG, and to represent the hydraulic link (hereinafter referred to as HL) in the dynamic model of the HPD as a Kelvin--Voigt body (Obertyukh et al., 2021).

During the working cycle of the HPD, the stiffness k_{or} changes due to a change in the initial volume of the energy carrier as a result of adding or subtracting from it the volumes of the energy carrier spent on moving the moving links of the HPD and PPG and the actual compression of the energy carrier under high pressure. Numerous theoretical and experimental studies of the HPD VM and VIM have established (Virnyk et al., 2007). This assumption significantly simplifies the mathematical modelling of HPD VM and VIM.

The actual dynamic process of the working cycle of any HPD and PPG is characterised by numerous variables that can often change randomly. Attempts to take all variable factors into account during mathematical modelling with HPD systems would lead to a very complex mathematical model of HPD with insurmountable mathematical difficulties during model analysis and research.

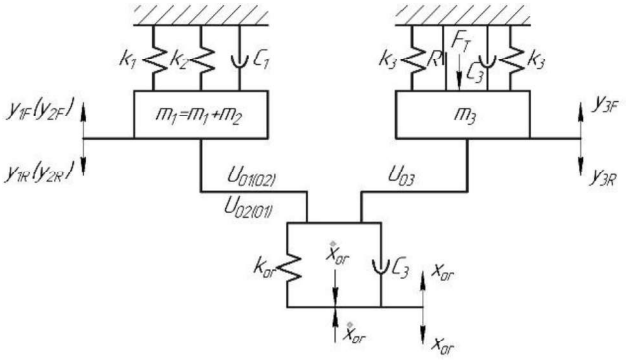

Fig. 4. Dynamic model of the studied HPD and PPG

To facilitate the construction process based on the developed dynamic model Fig. 4) of the mathematical model of the HPD, it is advisable to divide the initial dynamic model into four models of direct (Fig. 5, a, b) and reverse (Fig. 5, c, d) movements of masses $m_{1\Sigma}$ and m_3.according to the principle of dismemberment by bringing HL to masses $m_{1\Sigma}$ and m_3.

For simplicity, let us assume that the force $F_T = const$ acts during both the forward and reverse strokes of masses $m_{1\Sigma}$ and m_3. In real technological processes, such as vibration pressing of powder materials, $F_T = var$, but to take this into account, we need the law of change of the function $F_T = f(t_{spr})$, where t_{spr} is the vibration pressing time of the product. A more or less constant value $F_T \approx const$ is reached at the end of the vibropressing process (Sevostianov, 2020; Iskovich-Lototskiy & Manzhilevskiy, 2013). Let us take this moment as the calculation point.

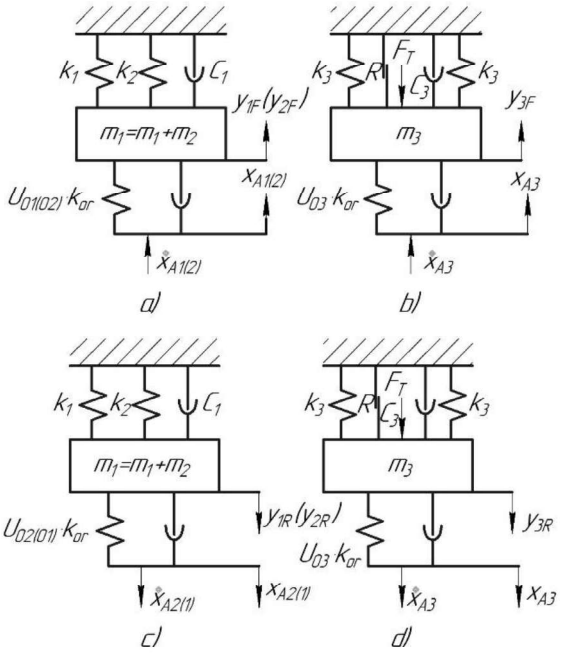

Fig. 5. Simplified dynamic models of direct (a, b) and reverse (c, d) movements of masses $m_{1\Sigma}$ and m_3

4. Conclusions

The concepts of pressure pulse intensity and displacement of PPG and HPD links, cycle coefficients of these pulses can be used in the development of correct scientifically based methods for the design calculation of PPG and HPD.

Based on a detailed analysis of the approximate cycle diagram of the working cycle of the PPG and HPD, the relationship and interconnection between individual time intervals of pressure pulses in the cyclic hydraulic accumulator, the executive hydraulic cylinder and the movements of the shut-off element 3, the valve sleeve 6 and the plunger 13 (Fig. 1).

Based on a scientifically sound structure of assumptions, a constructive diagram of the PPG and HPD, and an indicative cycle diagram of the working cycle and representation of the HL in the form of a Kelvin-Voigt body, a dynamic model of the HPD and PPG has been constructed, Fig. 4).

The initial dynamic model based on the principle of consideration is divided into four simple models of direct and reverse movements of masses $m_{1\Sigma}$ and m_3 (Fig. 5), on the basis of which, using D'Alembert's principle.

The results indicate that the device is theoretically effective and conforms to the vibration law of the vibrating screen, thus meeting the conditions for experimental operation.

References

Cherno, A. A. (2017). Control of electromagnetic vibratory drive using a phase difference between current harmonics. *Journal of Automation and Information Sciences, 49*(7). https://doi.org/10.1615/JAutomatInfScien.v49.i7.50

Cieplok, G. (2023). Self-synchronization of drive vibrators of an antiresonance vibratory conveyor. *Journal of Theoretical and Applied Mechanics, 61*(4), 729–739. https://doi.org/10.15632/jtam-pl/170840

Hou, L., Sun, Q., Deng, L., Liu, Y., Feng, D. (2022). Structural design and effect analysis on a new type of hydraulic oscillator driven with double valve groups. *Scientific Reports, 12*. https://doi.org/10.1038/s41598-022-20116-8

Hou, Y., Li, H., Fang, P. (2025). Theoretical study and simulation of elliptical vibrating screen with self-synchronous drive of double eccentric wheels. *Journal of Vibration Engineering & Technologies, 13*, 123. https://doi.org/10.1007/s42417-024-01678-5

Iskovich-Lototskiy, R. D., Manzhilevskiy, O. D. (2013). *Vibro-abrasive processing of parts on installations with a hydraulic pulse drive*. VNTU.

Iskovych-Lototskyi, R. (2026). *Fundamentals of the theory of calculation and development of processes and equipment for vibro-impact pressing*. VNTU.

Maslov, A., Salenko, Y., Shchetinin, V., Vakulenko, R., Kalach, I. (2021). *Theoretical research of vibrations of the electromechanical drive of a technological machine in construction production* [Conference paper]. https://doi.org/10.1109/MEES52427.2021.9598628

Mofidian, S. M. M., Bardaweel, H. (2018). Theoretical study and experimental identification of elastic-magnetic vibration isolation system. *Journal of Intelligent Material Systems and Structures, 29*(18), 3550–3561. https://doi.org/10.1177/1045389X18783869

Obertyukh, R., Slabkyi, A., Petrov, O., Bakalets, D. (2024). Substantiation of the methodology for calculating the design of a small-sized hydraulic pulse vibrator. *Vibro-engineering Procedia, 56*, 22–28. https://doi.org/10.21595/vp.2024.24512

Obertyukh, R., Slabkyi, A., Petrov, O., Kudrash, V. (2021). Mathematical modeling of the device for radial

vibroturning. In V. Tonkonogyi et al. (Eds.), *Advanced manufacturing processes II* (Lecture Notes in Mechanical Engineering). Springer. https://doi.org/10.1007/978-3-030-68014-5_55

Obertyukh, R., Slabkyi, A., Polishchuk, L., Povstianoi, O., Kumargazhanova, S., Satymbekov, M. (2022). Dynamic and mathematical models of the hydroimpulsive vibro-cutting device with a pressure pulse generator built into the ring spring. *Informatyka, Automatyka, Pomiary w Gospodarce i Ochronie Środowiska, 12*(3), 54–58. https://doi.org/10.35784/iapgos.3049

Sevostianov, I. V. (2020). *Technology and equipment for vibro-impact dehydration of wet dispersed materials*. VNAU.

Shevtsova, V., Ryzhkov, I. I., Melnikov, D. E., Gaponenko, Ya., Mialdun, A. (2010). Experimental and theoretical study of vibration-induced thermal convection in low gravity. *Journal of Fluid Mechanics, 648*, 53–82. https://doi.org/10.1017/S0022112009993442

Tang, P., Zhao, H., Zhu, B., Lu, J., Zhang, W. (2024). Study on the influence of geometric parameters on vibration characteristics of hydraulic oscillator used in oil drilling. *Journal of Physics: Conference Series, 2752*, 012213. https://doi.org/10.1088/1742-6596/2752/1/012213

Virnyk, M., Iskovych-Lototskyi, R., Veselovska, N. (2007). *Vibration and vibration-impact processes and machines in the foundry industry*. VNTU.